GROUP 54B

SMART WIRING SYSTEM (SWS) NOT USING SWS MONITOR

CONTENTS

GENERAL INFORMATION

M1549000100469

The exclusive signal lines for transmitting the multi-distribution data are connected as follows between the ETACS-ECU, column switch (incorporated inside the column-ECU), front-ECU, power window main switch (incorporated inside the power window-ECU), and power window sub switches (incorporated inside the power window-ECU) for internal communication.

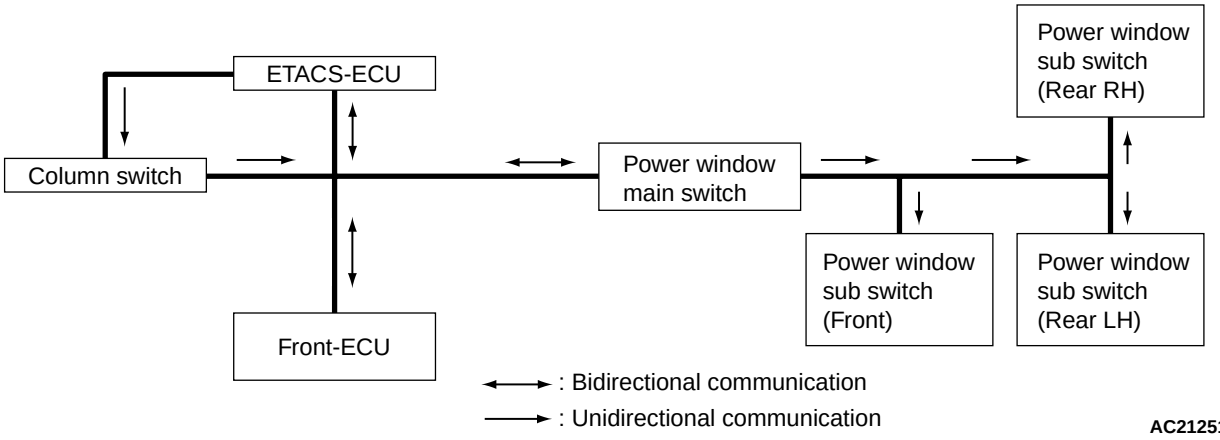

AC212517AG

Buzzer

Lamp reminder function

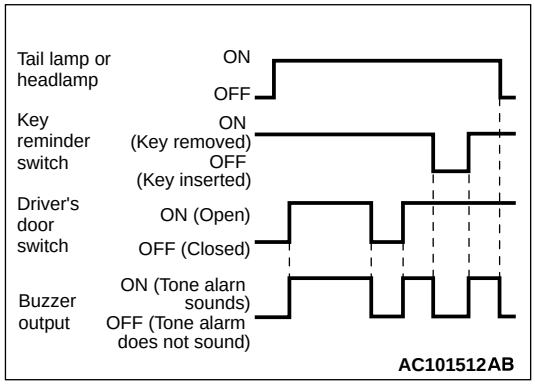

AC101512AB

When the ignition key is removed and then the driver's door is opened with turning ON the tail lamp or the head lamp, the buzzer sounds continuously to alert the driver that the lamp is still ON.
However, if the tail lamp or the headlamp is turned off by the headlamp automatic-shutdown function, the buzzer does not sound.

Central door locking

Central door locking system

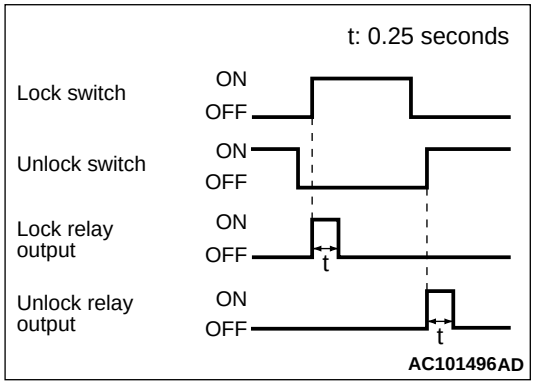

AC101496AD

When the front doors is locked (when the lock switch turns ON after turning OFF the unlock switch in the driver's door lock actuator), ETACS-ECU turns ON the lock relay output for 0.25 second, and locks all doors (including the tailgate).
When the front doors is unlocked (when the unlock switch turns ON after turning OFF the lock switch on the driver's door lock actuator), ETACS-ECU turns ON the unlock relay output for 0.25 second, and unlocks all doors (including the tailgate).

Ignition key reminder function

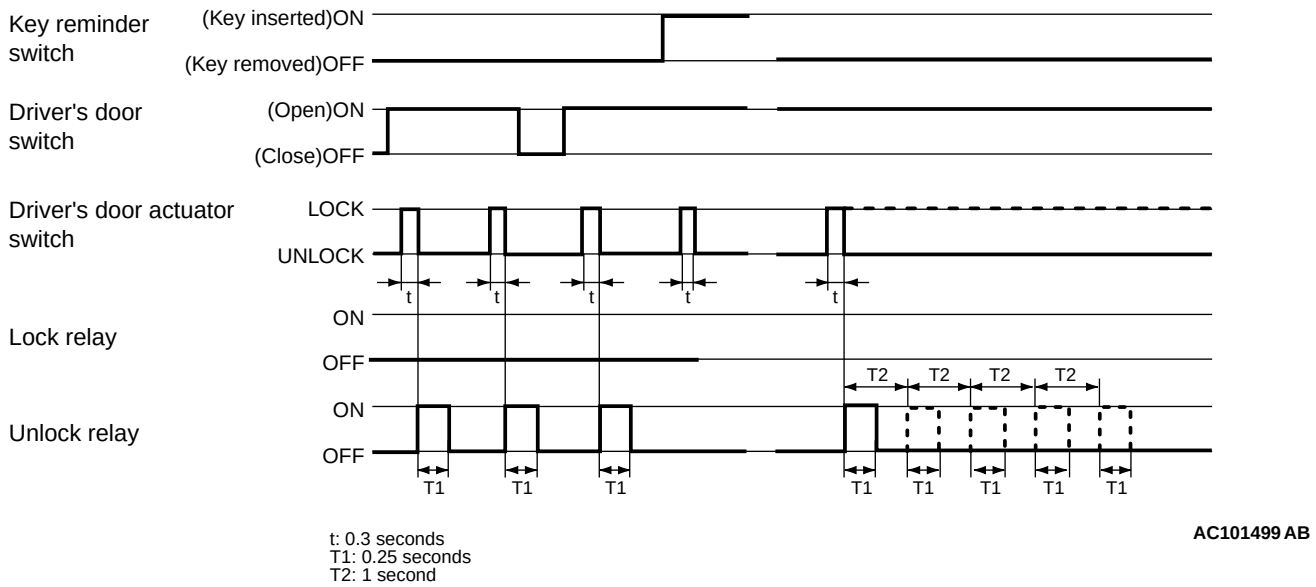

When the driver's door is opened with the ignition key inserted to the ignition cylinder and the door is locked (when the lock switch turns ON after turning OFF the unlock switch in the driver's door lock actuator), after approximately 0.3 second, ETACS-ECU turns ON the unlock relay output for 0.25 second to discourage the door lock operation so that the ignition key left in the ignition cylinder is prevented.
If the discouraging the door lock operation fails, the current supply will be retried. (The unlock relay output is turned ON for 0.25 second up to five times with one second interval.)

NOTE: The broken line in the graph indicates the current supply retry state if the discouraging door lock operation fails.

Impact detection door unlock function
If the vehicle crashed with the ignition switch ON or 30 seconds after turning the ignition switch to LOCK (OFF), and the impact sensor detects an impact greater than the specified value, the impact sensor sends the signal to ETACS-ECU. Then, within the 0.1 second, ETACS-ECU energizes the unlock relay for one second for releasing the door lock to prevent passengers to kept inside the vehicle after the crash.

NOTE: The fail safe disables the operation under the following conditions. (Diagnosis code No. 31 or 32 is output at this time.) Turn ON the ignition switch again after turning the ignition switch to LOCK (OFF) to return from the fail safe state.

- *No. 31: When the ignition switch is ON, and the sensor shows under the short circuit detect voltage for 2.5 second*
- *No. 32: When the ignition switch is ON, and the sensor shows over the closed circuit detect voltage for 0.4 second*

Keyless entry system

Keyless entry hazard lamp answerback function (the initial condition: with function of lock/unlock)

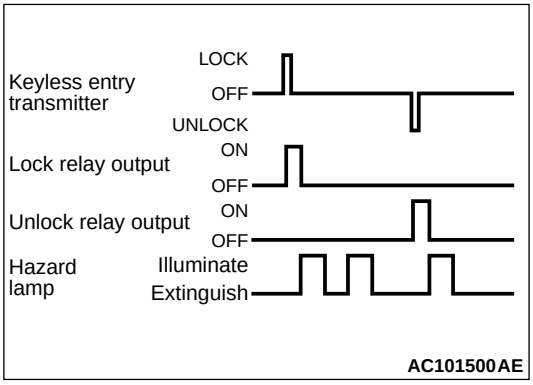

The hazard lamp answerback function that allows checking the lock/unlock state of the door easily even in the daytime is installed. When the lock signal from the keyless entry transmitter is received into ETACS-ECU, all doors (including the tailgate) are locked, and the hazard warning lamp blinks twice. When the unlock signal is received, all doors (including the tailgate) are unlocked, and the hazard warning lamp blinks once.

NOTE: The answerback blink time can be adjusted by the adjustment function.

Keyless entry room lamp answerback function

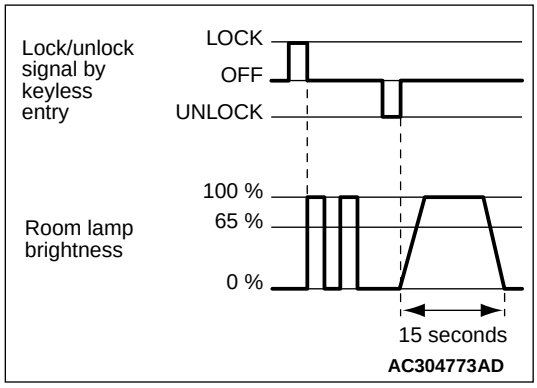

The room lamp blinks two times while locking the door for easy checking the keyless entry function. When the door is unlocked, the lamp lamps on for 15 seconds (100%), and turns off.

Timed locking mechanism

After unlocking the doors with the keyless entry transmitter, if no doors are opened, if the ignition key is not inserted or if the locking function is not operated, the ETACS-ECU automatically locks the doors in 30 seconds.

Windshield wiper and washer

Intermittent control (the initial condition: with function)

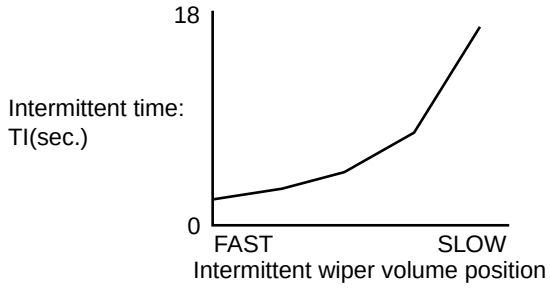

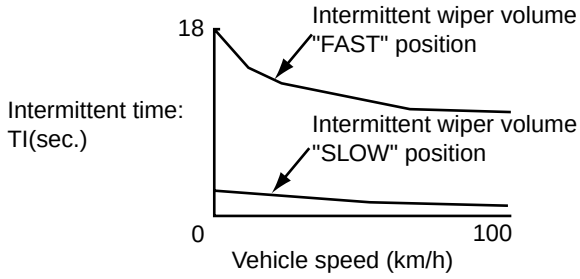

AC300134AB

ETACS-ECU calculates the intermittent time TI from the vehicle speed calculated from the windshield intermittent wiper volume of the column switch and the vehicle speed signals (engine-ECU), and sends it to the front ECU as SWS data.

NOTE: The vehicle speed sensing function can be invalidated by the adjustment function.

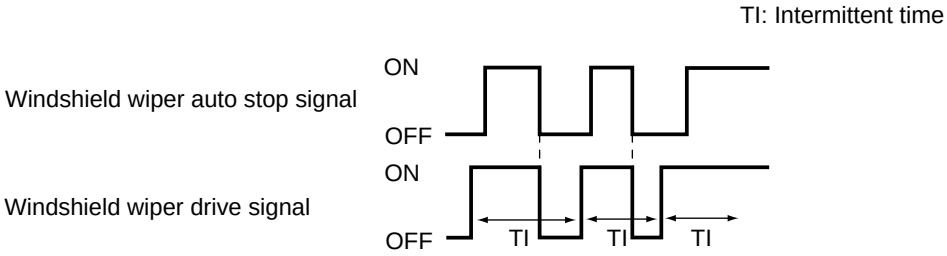

AC300135 AC

The front ECU determines the intermittent time TI from the input SWS data, and turns ON the windshield wiper drive signal. When the wiper comes to the stop position, the windshield wiper auto-stop signal is turned OFF, and the windshield wiper drive signal turns OFF.

When the intermittent time TI is elapsed after being turned ON the windshield wiper drive signal, the windshield wiper drive signal is turned ON again, and the above-mentioned operation is repeated.

Mist wiper control

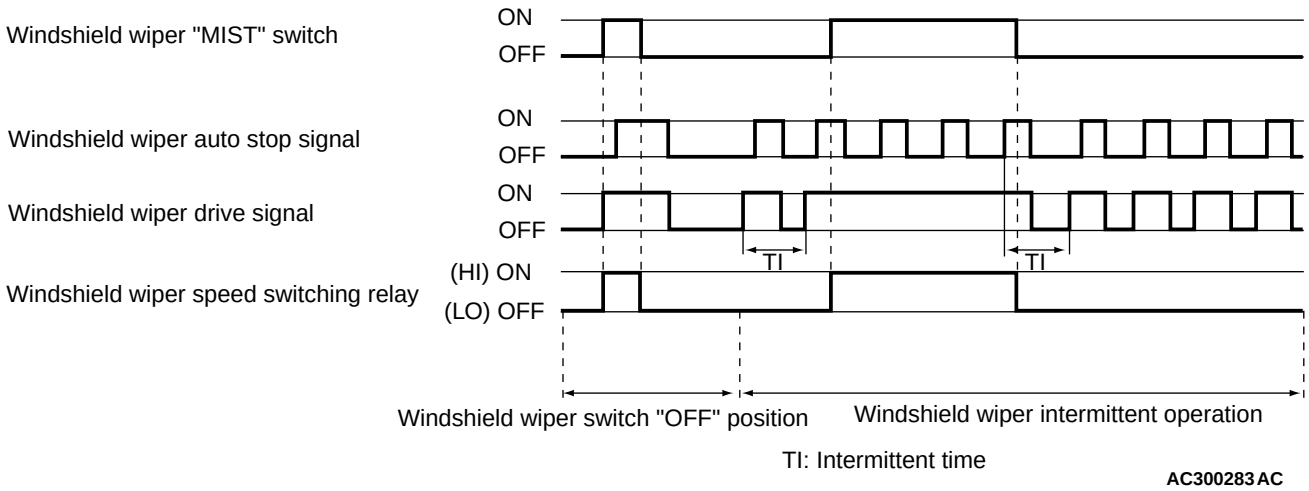

When the windshield wiper mist switch of the column switch is turned ON while the ignition switch is ACC or ON, the column switch turns ON the windshield wiper drive signal. At the same time, the wiper speed switching relay turns to ON (HI). When the windshield mist wiper switch is ON, the windshield wiper operates at the high speed.

Low speed wiper and high speed wiper control

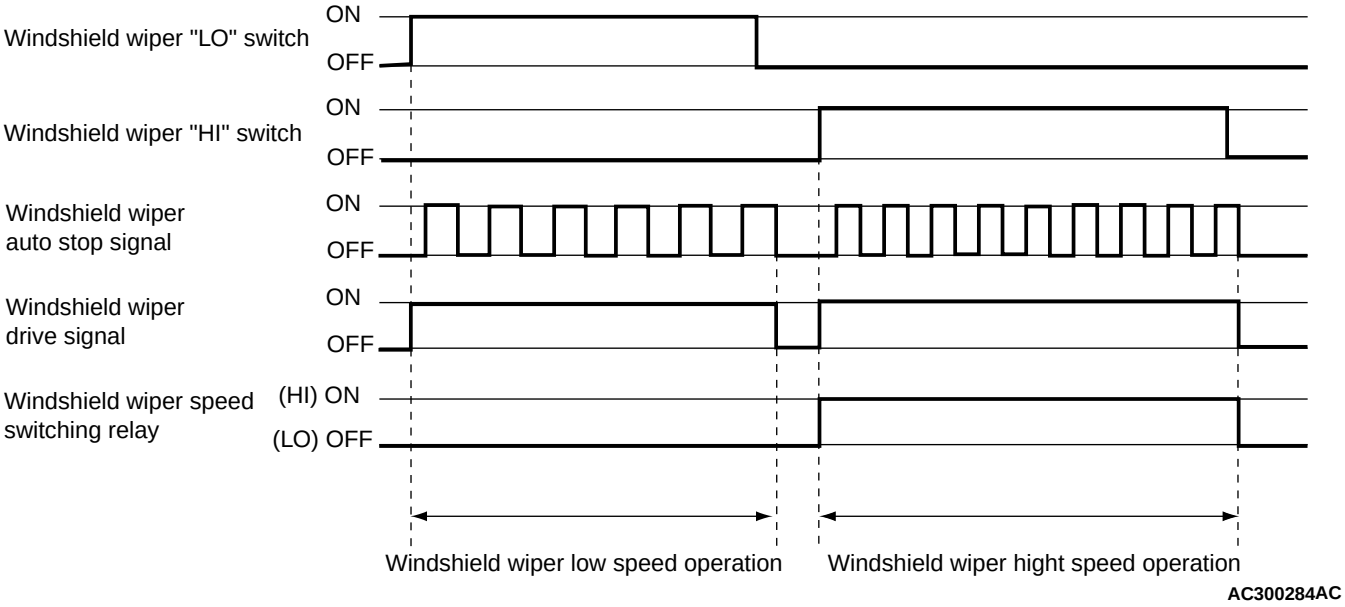

When the windshield low speed wiper switch of the column switch is turned ON while the ignition switch is ACC or ON, the column switch turns ON the windshield wiper drive signal. Also, the wiper speed switching relay turns to OFF (LO), and the windshield wiper operates at the low speed.

When the windshield high speed wiper switch is turned ON, the windshield wiper drive signal turns ON. Also, the wiper speed switching relay turns ON (HI), and the windshield wiper operates at the high speed.

Windshield wiper linked with washer function

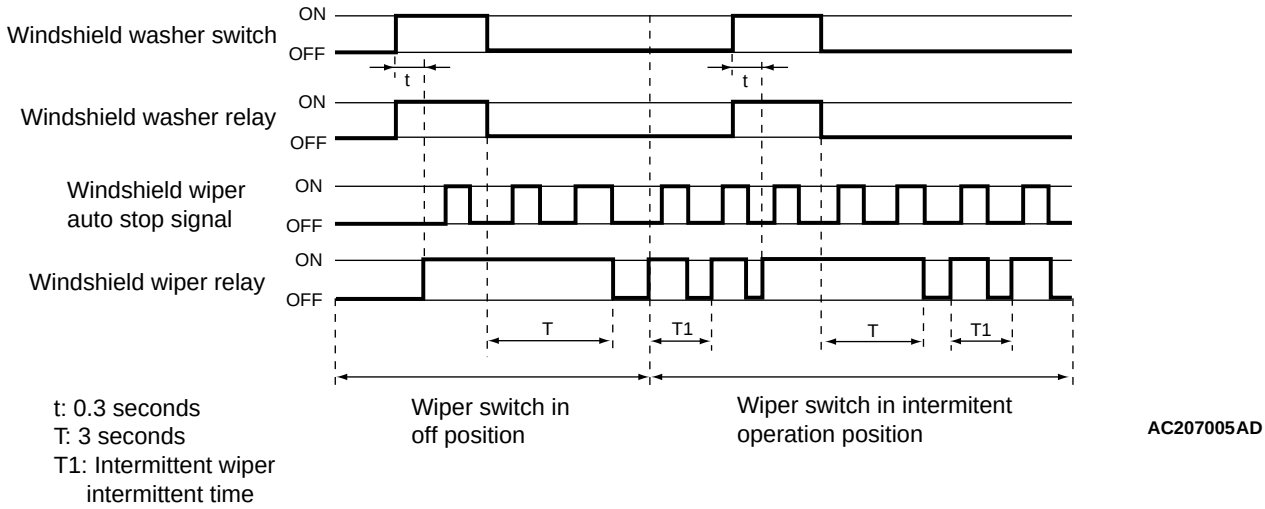

Wiper switch	OFF position				Intermittent operation position				Low-speed or high-speed operation position
Washer switch ON time	0.3 seconds or less	0.3 to 0.5 seconds	0.5 to 0.7 seconds	0.7 seconds or more	0.2 seconds or less	0.2 to 0.5 seconds	0.5 to 0.7 seconds	0.7 seconds or more	-
T1	0 second	1 second	2 seconds	3 seconds	0 second	1 second	2 seconds	3 seconds	3 seconds

- When the front-ECU receives a windshield washer switch signal from the column switch with the ignition switch in the ACC or the ON position, the ECU turns on the windshield washer relay. When the windshield washer relay becomes ON, the windshield washer motor starts to run to spray the washer fluid in the washer tank onto the windshield through the washer nozzles. When the windshield washer switch signal remains on for 0.3 seconds or more, the signal turns on the windshield wiper relay (The wiper interval depends. For details, see the list) to operate the windshield wiper at high speed. Turning off the windshield washer switch causes the front-ECU to turn off the windshield wiper relay "T" seconds later, thus operating the wiper to the auto stop position at low speed.
- When the windshield washer switch is turned ON during the intermittent operation of the windshield wiper, the windshield wiper switches to continuous operation and then resumes intermittent operation.

Rear wiper and washer

Rear wiper control [the initial condition: 8 seconds (without successive operations)]

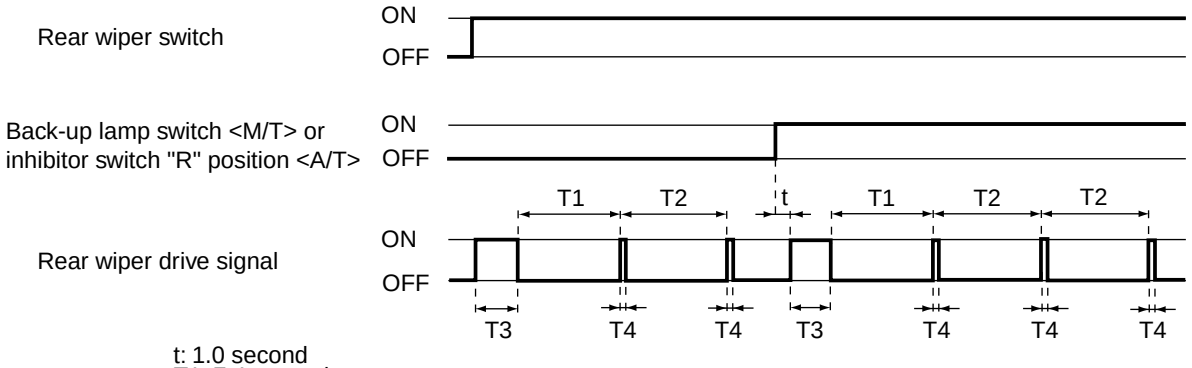

t: 1.0 second
T1: 7.4 seconds
T2: 8.0 seconds
T3: 3.0 seconds
T4: 0.6 second

AC301877AC

1. When the rear wiper switch on the column switch is turned ON with the ignition switch at the ACC or ON position, ETACS-ECU turns ON the rear wiper drive signal for 3 seconds (approximately 2 operations) and performs the intermittent action at 8-second intervals.

When the shift lever <M/T> or selector lever <A/T> is moved to R position during the rear wiper operation, the back-up lamp switch <M/T> or inhibitor switch R position <A/T> turns ON one second after that, ETACS-ECU sends the rear wiper drive signal for 3 seconds (approximately 2 operations), and operates the intermittent action in 8 seconds interval.

2. By the special operation of the rear wiper switch on the column switch (successive 2-time operations), the rear wiper operates continuously regardless of the set intermittent time.

NOTE: The rear wiper intermittent time can be adjusted or canceled for continuous operation by the adjustment function.

Headlamp

Head lamp automatic-shutdown function (the initial condition: with function)

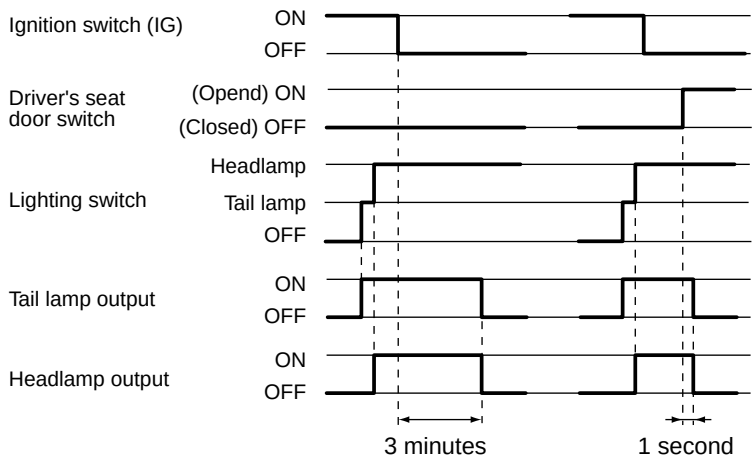

AC300449 AB

Even when the lighting switch (tail lamp switch or head lamp) is ON, the headlamp (including the tail lamps) turns off automatically with any of the following conditions to prevent the battery discharge caused by unattended operation.

- If the ignition switch is turned OFF with the lighting switch ON, the lamp turns off automatically after 3 minutes. If the driver's door is opened during the 3 minutes, the lamp turns off after one second. (One seconds before turning off, the lamp reminder buzzer sounds.)

After the head lamp automatic-shutdown function, when the lighting switch is turned OFF and then ON or, the ignition switch is turned ON, the head lamp lamps again.

NOTE: For vehicles with the keyless entry system, this function can be invalidated by the adjustment function.

Flasher timer function

Turn signal lamp

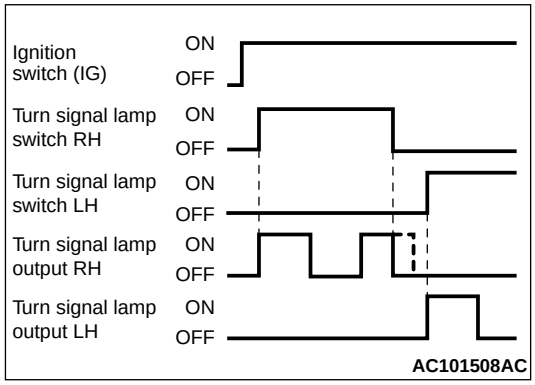

AC101508AC

When the turn signal lamp switch is ON (LH or RH) with the ignition switch is ON, the turn signal lamp output (flash signal) is turned ON.
If the lamp bulb of the front or rear turn signal lamp has burned out, the flashing speed becomes faster to alert the driver that the lamp bulb has burned out.

Hazard warning lamp

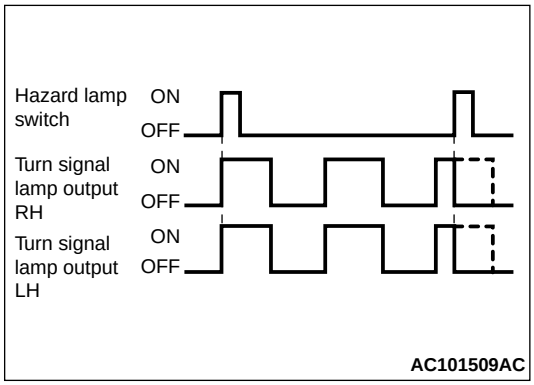

AC101509AC

When the hazard lamp switch input signal turning from OFF to ON is detected, the flashing states turns over by the signal. (When the hazard lamp is not blinking, it blinks. If it is blinking, it turns off.)

NOTE:

1. *The push-return switch is adopted for the hazard lamp switch.*
2. *Even if the lamp bulb has burned out, the flashing speed of the hazard lamp is not changed.*

Fog lamp

Front Fog Lamp Control Function

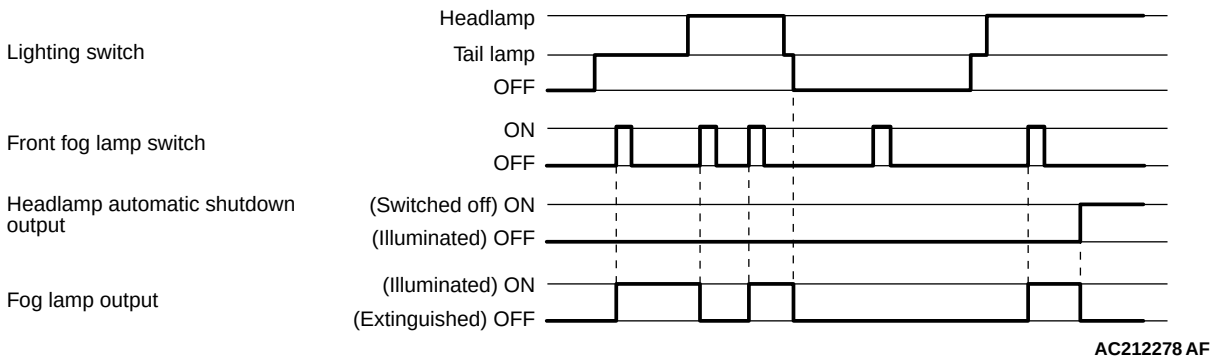

When the fog lamp switch is turned to ON with the tail lamp or the headlamp lit (the taillamp switch or the headlamp switch is ON), the fog lamp relay turns ON, and the fog lamps lamp.
If the tail lamp or the headlamp is turned off with the lighting switch OFF while the fog lamps lit, the fog lamps turn off the same time to prevent unattended operation.

If the tail lamp is turned off by the headlamp auto-turn off function, the fog lamps turn off at the same time. However, if the tail lamps lamp again, the fog lamps do not.

Rear Fog Lamp Control Function <Vehicles with Rear Fog Lamp>

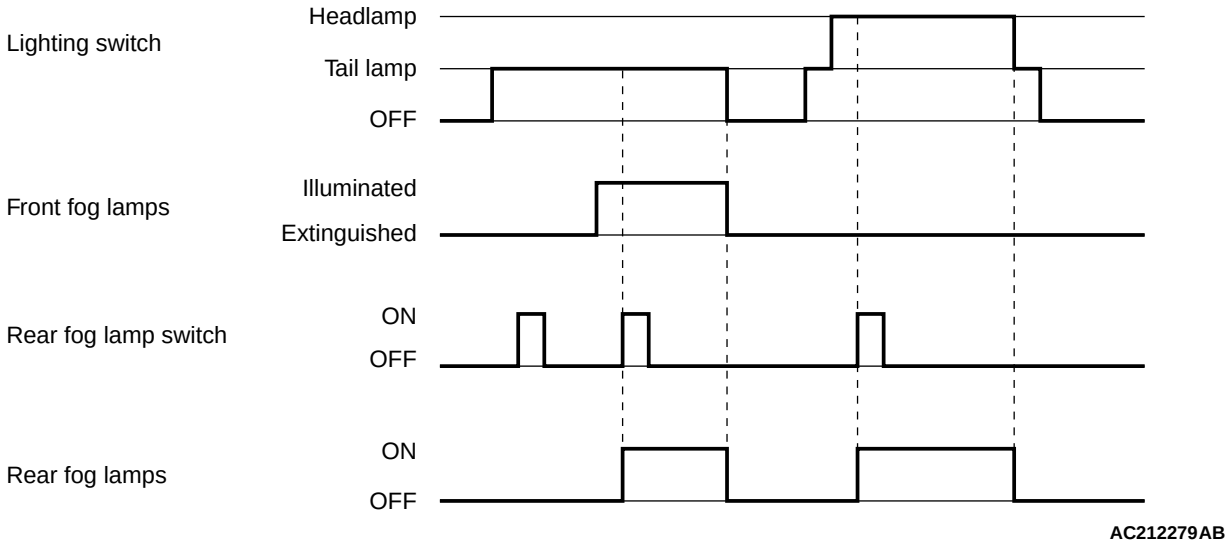

If the rear fog lamp switch is turned ON when the headlamp or the front fog lamp is turned ON, the rear fog lamp is switched ON and OFF alternatively.

If the headlamp and the front fog lamp are turned OFF, the rear fog lamp is turned OFF at the same time.

Interior lamp

Dimmer interior lamp control function (the initial condition: 15 seconds)

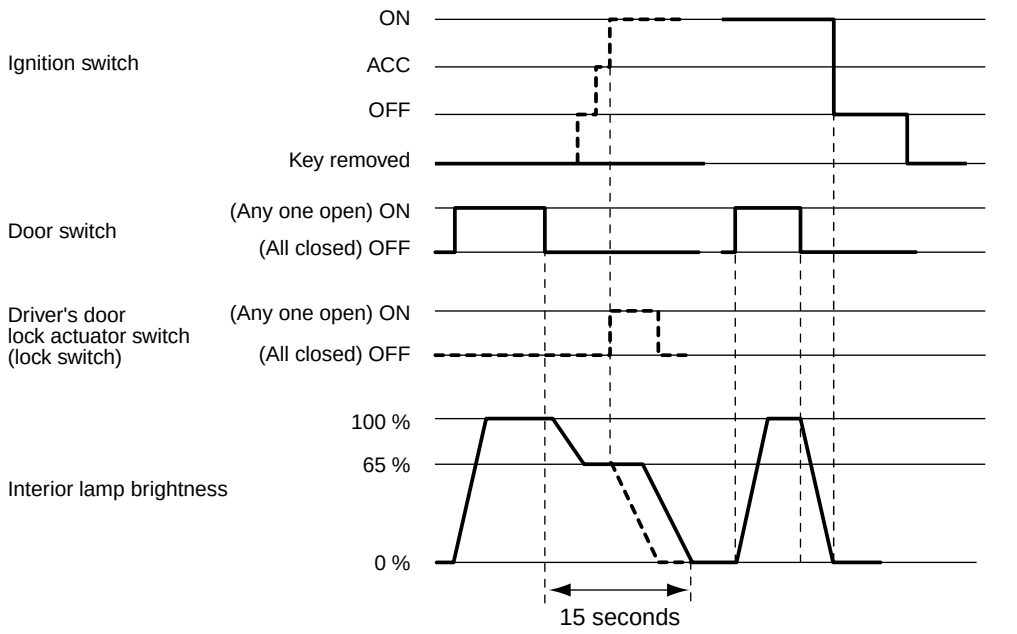

When the interior lamp switch is on the door position, ETACS-ECU controls the interior lamp lamps as follows.

1. When the ignition switch is OFF:

By opening any door or tailgate lamps, the lamp turns ON (100%), and dims (65%) when the door or tailgate is closed, then and turns off after 15 seconds.

However, when the ignition switch is turned ON or the door lock is operated, the lamps turn off at that time.

2. When the ignition switch is ON:

By opening any door or tailgate lamps, the lamp (100%) turns ON and OFF when the door or tail gate is closed.

3. When all doors and the tailgate are closed, and the ignition key is removed <Vehicles with keyless entry system>:

By removing the ignition key with all doors and the tailgate closed, the lamp turns ON 100%, and turns off after 15 seconds.

By inserting the ignition key again or operating the door lock with the lamp lit, the lamps turns off.

NOTE: For the vehicles with the keyless entry system, the dimmer interior lamp turning off duration can be changed by the adjustment function.

Interior lamp automatic-shutdown off function <Vehicles with Keyless Entry System> (the initial condition: with function)

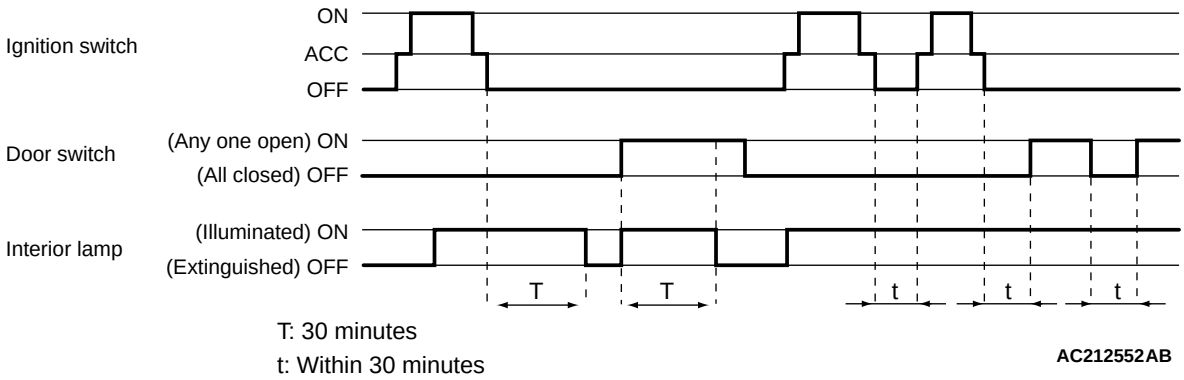

When the interior lamp such as the room lamp [all interior lamps connecting to the room lamp fuse (the front room lamp, the map lamp, the rear room lamp, and the ignition key cylinder illumination lamps)] is lit, but either one of the conditions is met, the interior lamp is turned off automatically for preventing the battery discharge caused by the unattended operation or the door-ajar.

- After 30 minutes with the interior lamp lit while the ignition switch is OFF, the lamp turns off automatically.
- After 30 minutes with any door opened while the ignition switch is OFF, the lamp turns off automatically.

After automatic-shutdown function, the interior lamp turns ON when any of the following condition is met.

- Open and close doors.
- Operate the keyless entry transmitter.
- Turn the ignition switch to ACC or ON.

NOTE:

1. *The interior lamp automatic-shutdown function can be disabled or enabled by the adjustment function.*
2. *After relamping, the lamp turns off after 30 minutes, when the interior lamp automatic-shutdown function is met.*

Ignition key cylinder illumination lamp control function

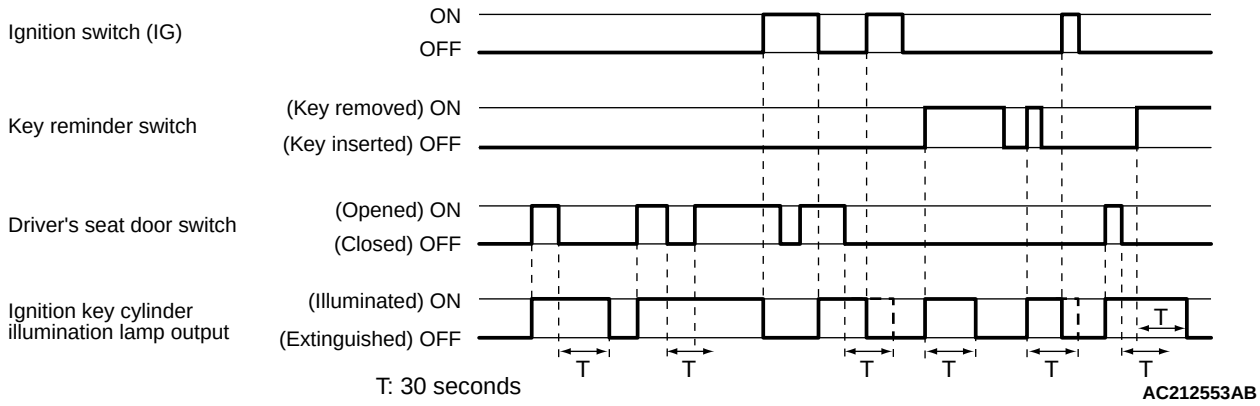

The ignition key cylinder illumination lamp lamps for 30 seconds when the driver's door is opened/closed with the ignition switch OFF. Also when the ignition key is removed from the ignition key cylinder, the lamp lamps for 30 seconds. In any cases, the ignition key cylinder illumination lamp turns ON when the ignition switch is turned to ON.

SPECIAL TOOLS

M1549000300690

Tool	Number	Name	Use
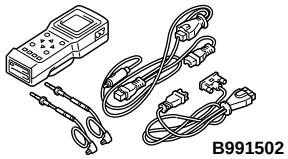 B991502	MB991502	MUT-II sub assembly	Check the SWS (The MUT-II displays diagnosis codes and input signals)
A 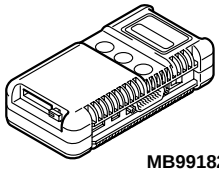 MB991824 B 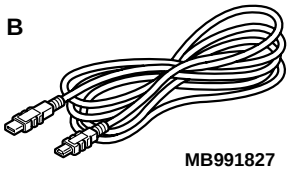 MB991827 C  DO NOT USED MB991910 D 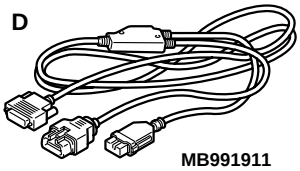 MB991911 E 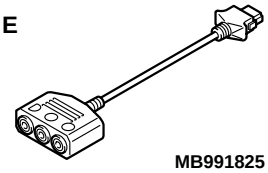 MB991825 F 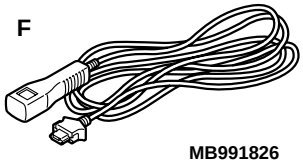 MB991826 MB991955	MB991955 A: MB991824 B: MB991827 C: MB991910 D: MB991911 E: MB991825 F: MB991826	MUT-III sub-assembly A: Vehicle Communication Interface (V. C. I.) B: MUT-III USB cable C: MUT-III main harness A (Vehicles with CAN communication system) D: MUT-III main harness B (Vehicles without CAN communication system) E: MUT-III measurement adapter F: MUT-III trigger harness	SWS communication line check (ECU check and service data) **⚠ CAUTION** **MUT-III main harness B (MB991911) should be used. MUT-III main harness A should not be used for this vehicle.**
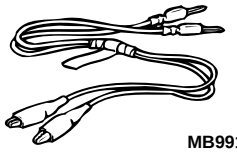 MB991529	MB991529	Diagnosis code check harness	Input signal check by using a voltmeter

SPECIAL TOOLS

Tool	Number	Name	Use
A B C D 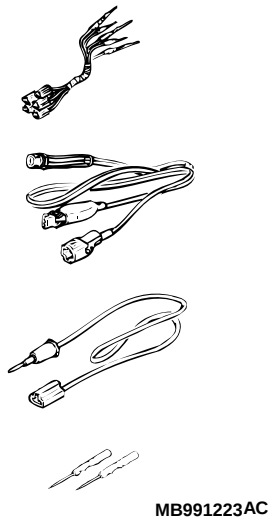 MB991223AC	MB991223 A: MB991219 B: MB991220 C: MB991221 D: MB991222	Harness set A: Check harness B: LED harness C: LED harness adapter D: Probe	Continuity check and voltage measurement at harness wire or connector A: For checking connector pin contact pressure B: For checking power supply circuit C: For checking power supply circuit D: For connecting a locally sourced tester

TROUBLESHOOTING

PRIOR TO TROUBLESHOOTING

M1549014700431

Before carrying out troubleshooting, check the following two items.

- Make sure that the ETACS-ECU, the junction block (J/B), the front-ECU and the engine compartment relay box are connected securely.
- Check that the system fuses and fusible links are not burned out.

STANDARD FLOW OF DIAGNOSTIC TROUBLESHOOTING

M1549000500616

Refer to GROUP 00 – How to Use Troubleshooting/Inspection Service Points P.00-6.

DIAGNOSTIC FUNCTION

M1549028900115

How to read diagnosis code

Use the MUT-II/III to read diagnosis code (Refer to GROUP 00 – How to Use Troubleshooting/Inspection Service Points P.00-6.)

NOTE: Connect the MUT-II/III to the 16-pin diagnosis connector (black).

NOTE: A diagnosis code can not be read when the ETACS-ECU is defective or the power supply voltage has risen. In this case, refer to inspection procedure A-1 "Communication with the MUT-II/III is not possible P.54B-48."

How to check input signals

1. Use the MUT-II/III or a voltmeter to check input signals (Refer to GROUP 00 – How to Use Troubleshooting/Inspection Service Points P.00-6.)
2. The input signals below can be checked by connecting the MUT-II/III or a voltmeter to the diagnosis connector.

NOTE: If a fault is found at the input signal check, refer to trouble symptom chart P.54B-45.

Switches which are applicable to input signal check, and their check conditions

Input signals	Requirements for sounding buzzer
Ignition switch (ACC)	When turned from the LOCK (OFF) position to the ACC position
Ignition switch (IG1)	When turned from ACC to ON
Back-up lamp switch	When the ignition switch is turned ON and the shift lever is moved to the R position.
Inhibitor switch ("R" position)	When the ignition switch is turned ON and the selector lever is moved to the R position.
Key reminder switch <Vehicles with keyless entry system>	When the inserted ignition key is pulled out
Hazard warning lamp switch	When the switch is turned from off to on
Front fog lamp switch	
Rear fog lamp switch	
Driver's door switch	When the driver's door is opened
All of the door switches	A door is opened when all the doors are closed
Driver's door lock actuator	When the driver's key cylinder or inside lock knob is unlocked or locked
Passenger’s door lock key cylinder switch	Turn the key to the lock or unlock position
Vehicle speed signal	When the vehicle speed has reached 10 km/h or more

Input signals		Requirements for sounding buzzer
Column switch	Tail lamp switch	When the lighting switch is moved from the automatic lamp position to the tail lamp position.
	Headlamp switch	When the lighting switch is moved from the tail lamp position to the automatic lamp position.
	Dimmer switch	When the switch is turned from off to on
	Passing lamp switch	
	Turn-signal lamp switch (LH)	
	Turn-signal lamp switch (RH)	
	Wind shield mist wiper switch	
	Headlamp washer switch	
	Windshield intermittent wiper switch	
	Windshield low-speed wiper switch	
	Windshield high-speed wiper switch	
	Windshield intermittent wiper volume	When the windshield intermittent wiper volume is rotated from "FAST" to "SLOW" (a pulse is sent around the volume middle position)
	Windshield washer switch	When the switch is turned from off to on
	Rear wiper switch	
	Rear washer switch	
Keyless entry transmitter	Switches	When the switch is turned from off to on
Interior lamp loaded signal		When a load is applied through multi-purpose fuse No.18

DIAGNOSIS CODE CHART

M1549000700308

Code No.	Diagnosis Details	Reference page
11	Trouble related to the ETACS-ECU	P.54B-17
12	Trouble related to the column switch or improper connection with the ETACS-ECU	P.54B-18
13	Trouble related to the front-ECU or improper connection with the ETACS-ECU	P.54B-25
21	Short circuit in SWS communication line	P.54B-31
31	Open circuit in signal line between the SRS-ECU and the ETACS-ECU (impact detection signal)	P.54B-37
32	Short circuit in signal line between the SRS-ECU and the ETACS-ECU (impact detection signal)	

DIAGNOSTIC TROUBLE CODE PROCEDURES

Diagnosis code 11: Trouble related to the ETACS-ECU

DIAGNOSIS CODE SET CONDITIONS

The ETACS-ECU monitors the data, which the ECU itself sends. If errors occur consecutively 15 times (for 0.6 seconds), a diagnosis code will be set. Then, if the data does not contain any errors consecutively 15 times (for 0.6 seconds), the ECU will stop sending the diagnosis code.

POSSIBLE CAUSES

- Malfunction of the ETACS-ECU

DIAGNOSTIC PROCEDURE

Check whether the diagnosis code is reset.

(1) Erase the diagnosis code.
(2) Again check that diagnosis code No.11 is set.

Q: Is diagnosis code No.11 set?

YES : Replace the ETACS-ECU.

NO : The trouble can be an intermittent malfunction (Refer to GROUP 00 – How to Cope with Intermittent Malfunction P.00-6).

Diagnosis code 12: Trouble related to the column switch or improper connection with the ETACS-ECU

⚠ CAUTION

Whenever the ECU is replaced, ensure that the power supply circuit, the earthing circuit and the communication circuit are normal.

Column Switch Power Supply and SWS Communication Circuit <LHD>

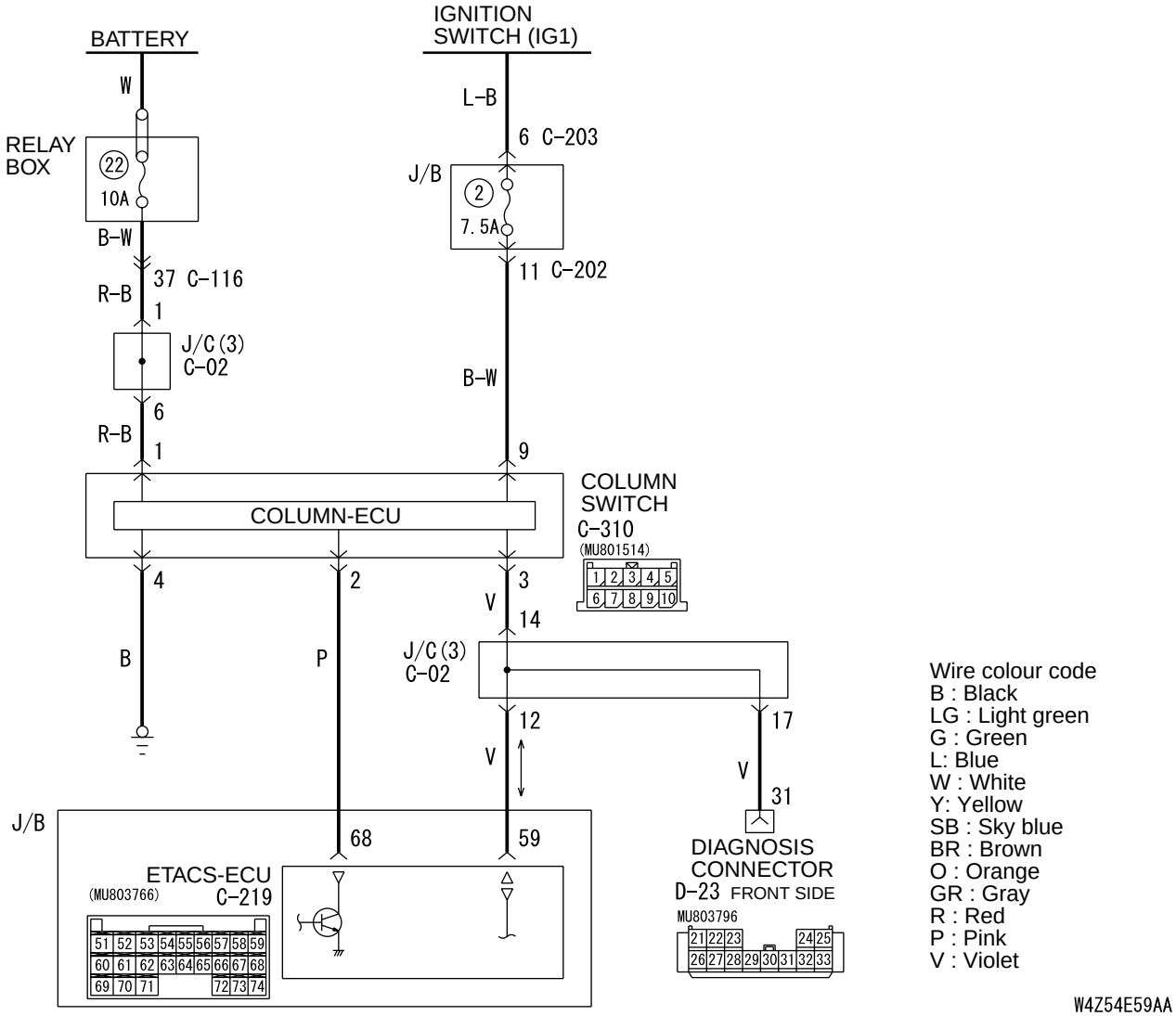

Column Switch Power Supply and SWS Communication Circuit <RHD>

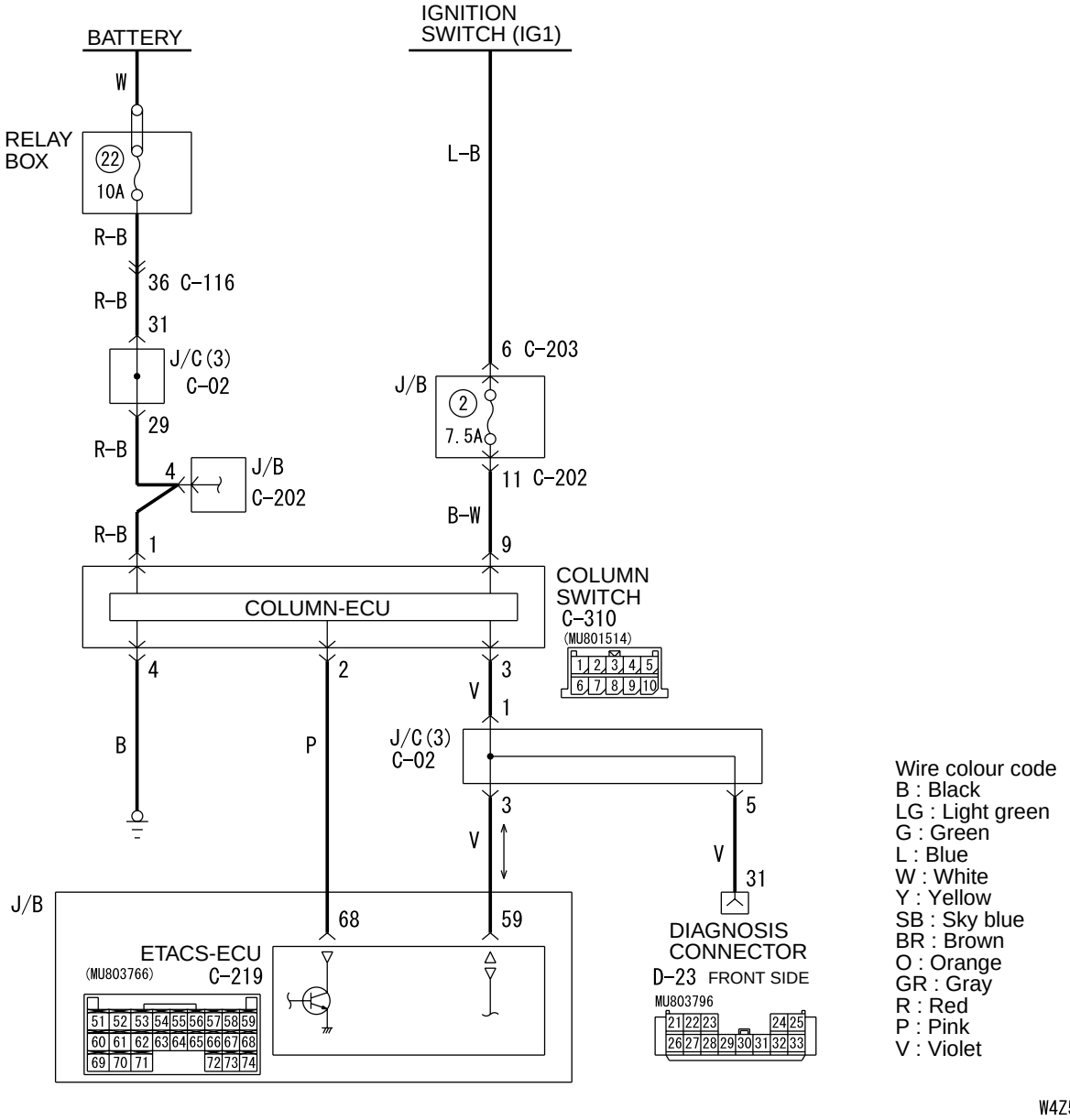

DIAGNOSIS CODE SET CONDITIONS

If the column switch ignores the data request signal sent by the ETACS-ECU (three times or more for one second), this diagnosis code will be set. Then, when the column switch observes the request signal for one second, the ECU will stop sending the diagnosis code.

POSSIBLE CAUSES

- Malfunction of the column switch
- Malfunction of the ETACS-ECU
- Damaged harness wires and connectors

DIAGNOSTIC PROCEDURE

Step 1. Use the MUT-II/III to confirm a diagnosis code. (MUT-II/III diagnosis code)

(1) Ignition switch: ON
(2) On completion, check that diagnosis code No.12 is not reset.

Q: Is diagnosis code No.12 set?
YES : Go to Step 5.
NO : Go to Step 2.

Step 2. Connector check: C-310 column switch connector

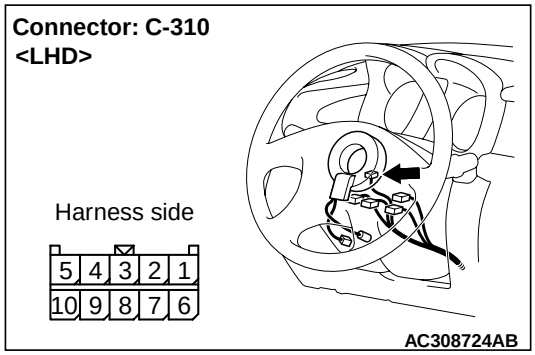

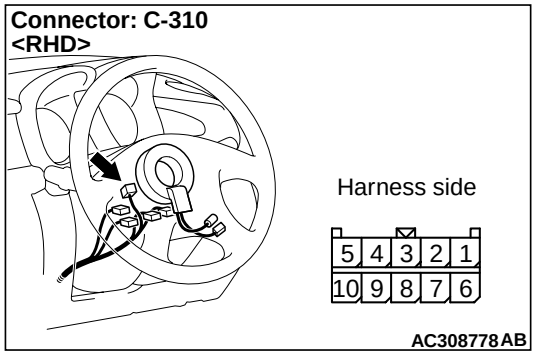

Q: Is the check result normal?
YES : Go to Step 3.
NO : Repair the defective connector.

Step 3. Measure the voltage at C-310 column switch connector.

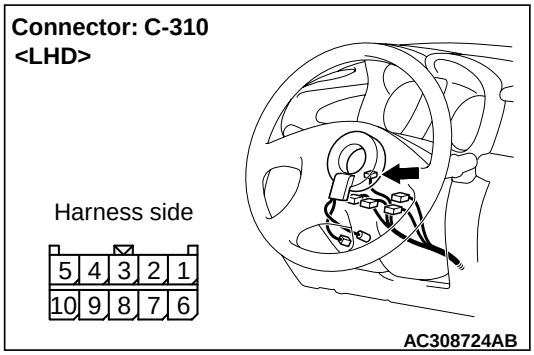

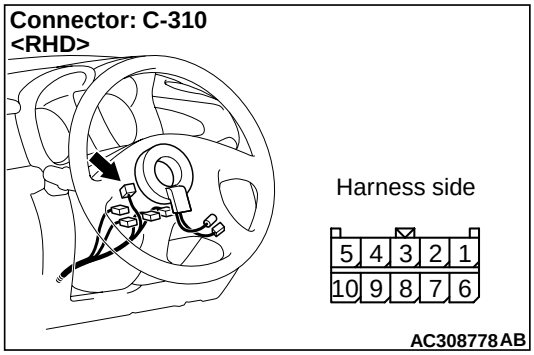

(1) Remove the column switch, and measure at the wiring harness side.

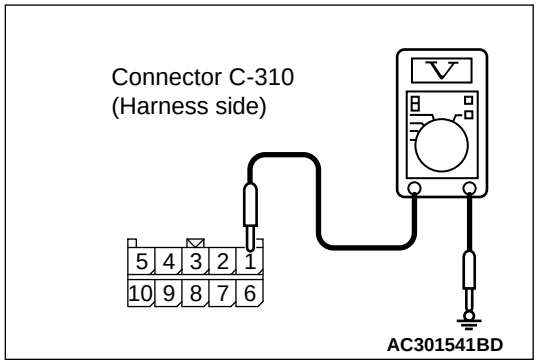

(2) Voltage between C-310 column switch connector terminal No.1 and body earth

OK: System voltage

Q: Is the check result normal?
YES : Replace the column switch.
NO : Go to Step 4.

Step 4. Check the wiring harness between C-310 column switch connector terminal No.1 and the battery.

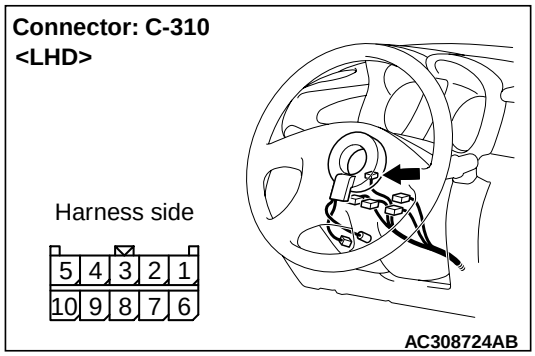

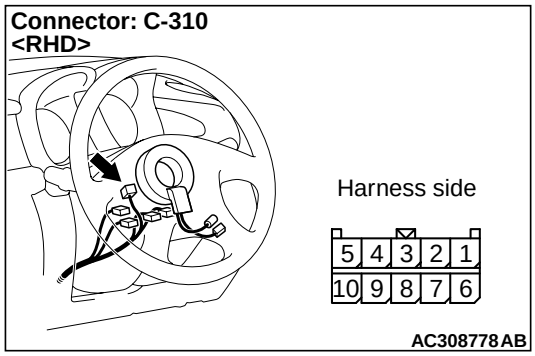

NOTE:

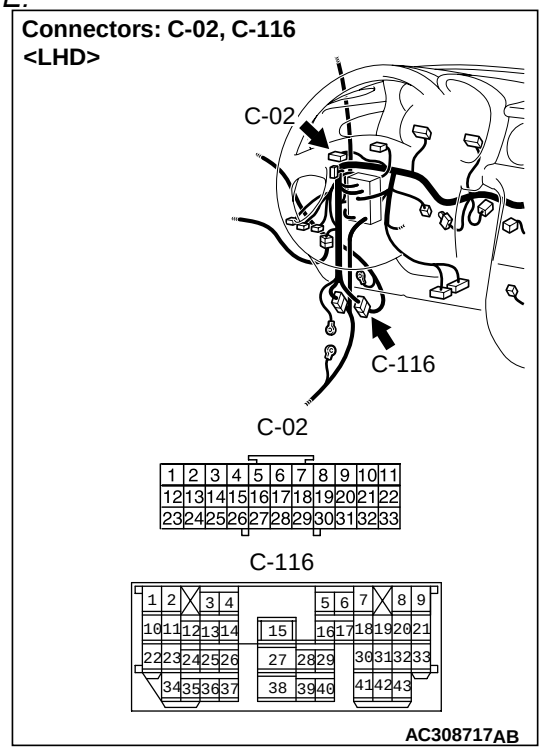

<L.H. drive vehicles> Prior to the wiring harness inspection, check intermediate connector C-116 and joint connector C-02, and repair if necessary.

NOTE:

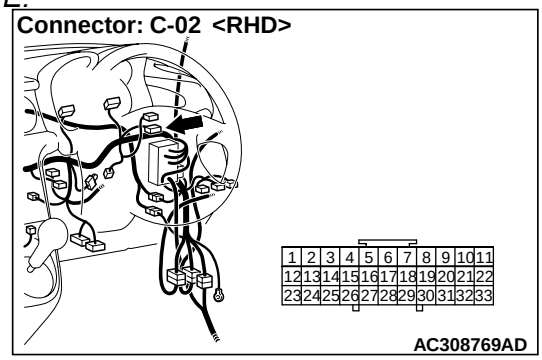

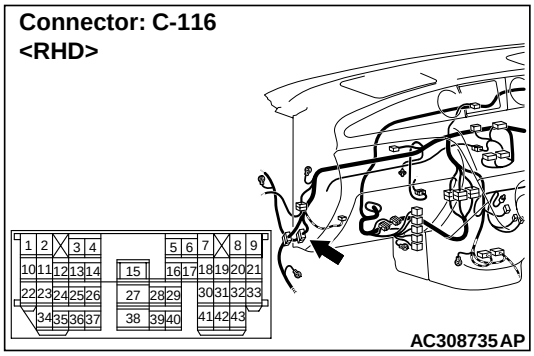

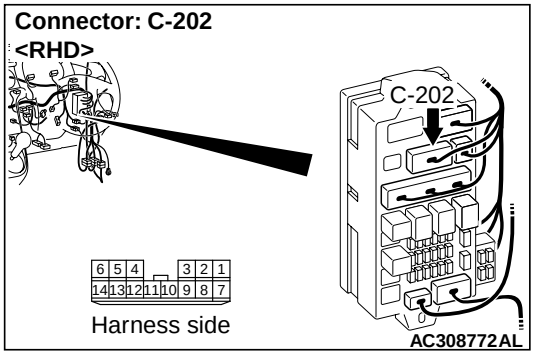

<R.H. drive vehicles> Prior to the wiring harness inspection, check intermediate connectors C-116, junction block connector C-202 and joint connector C-02, and repair if necessary.

- Check the power supply line for open circuit.

Q: Is the check result normal?

YES : The trouble can be an intermittent malfunction (Refer to GROUP 00 – How to Cope with Intermittent Malfunction P.00-6).

NO : Repair the wiring harness.

Step 5. Measure the resistance at the C-310 column switch connector.

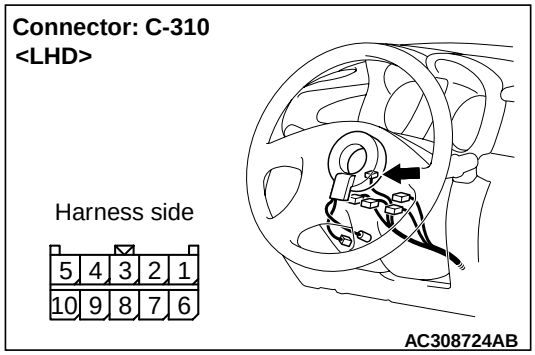

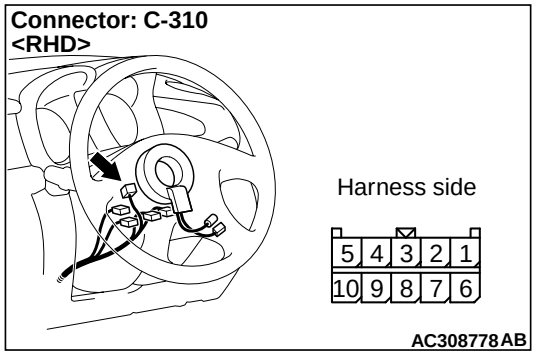

(1) Remove the column switch, and measure at the wiring harness side.

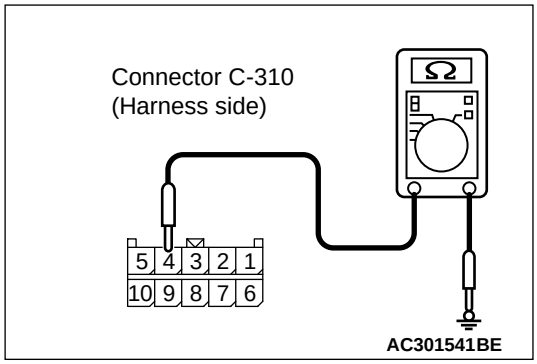

(2) Resistance between C-310 column switch connector terminal No.4 and body earth

OK: 2 Ω or less

Q: Is the check result normal?

YES : Go to Step 7.

NO : Go to Step 6.

Step 6. Check the wiring harness between C-310 column switch connector terminal No.4 and the body earth.

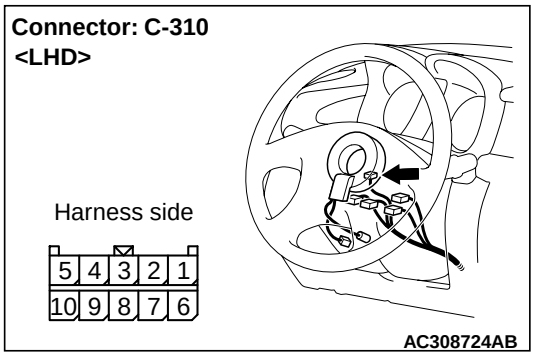

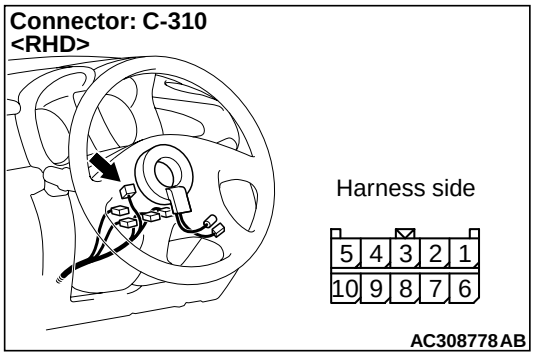

- Check the earth wires for open circuit.

Q: Is the check result normal?

YES : The trouble can be an intermittent malfunction (Refer to GROUP 00 – How to Cope with Intermittent Malfunction P.00-6).

NO : Repair the wiring harness.

Step 7. Connector check: C-219 ETACS-ECU connector

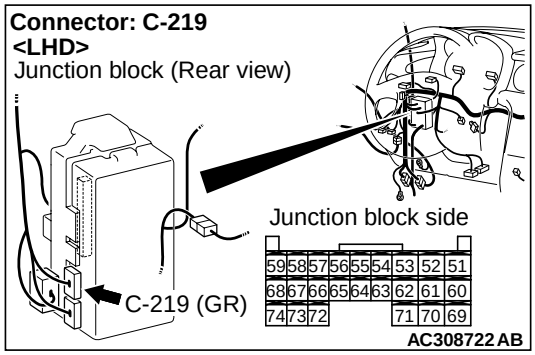

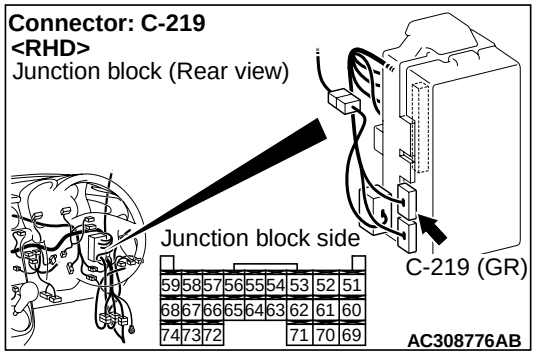

Q: Is the check result normal?
YES : Go to Step 8.
NO : Repair the defective connector.

Step 8. Check the wiring harness from C-219 ETACS-ECU connector terminal Nos. 59 and 68 to C-310 column switch connector terminal Nos. 3 and 2.

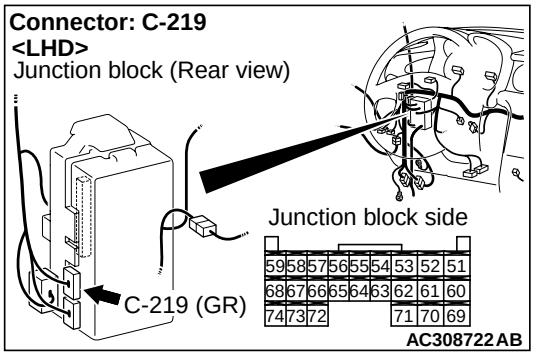

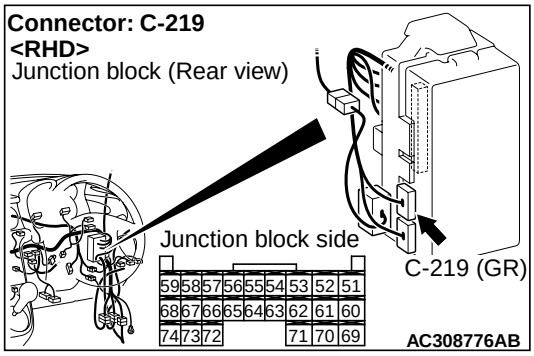

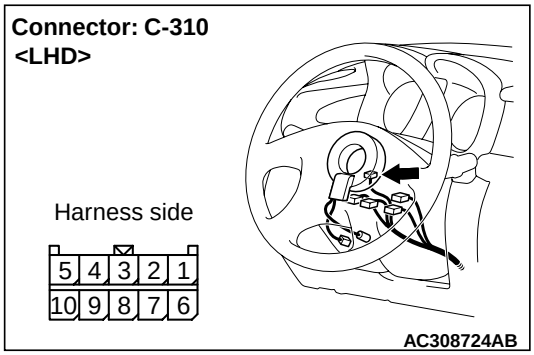

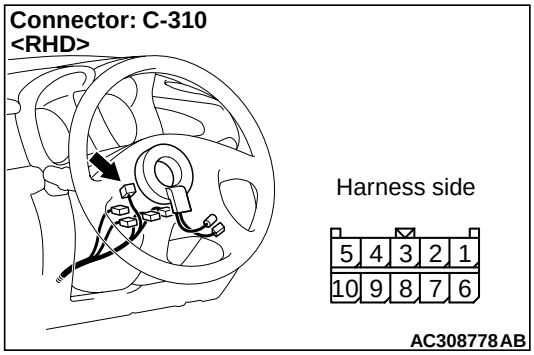

NOTE:

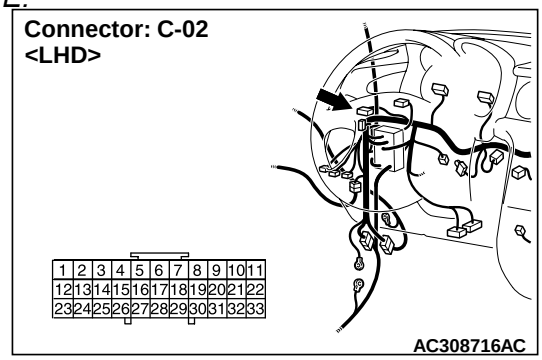

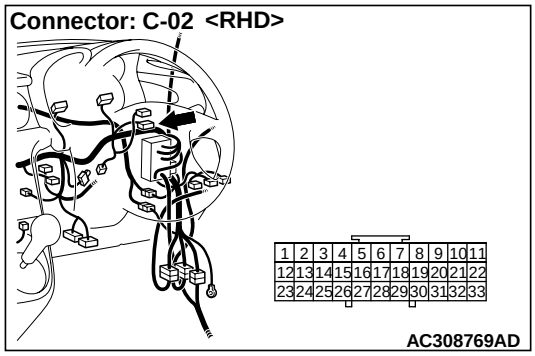

Prior to the wiring harness inspection, check joint connector C-02, and repair if necessary.

- Check the communication lines for open circuit.

Q: Is the check result normal?
YES : Go to Step 9.
NO : Repair the wiring harness.

Step 9. Check whether the diagnosis code is reset.

Replace the column switch, and then check that the diagnosis code is not reset.

(1) Replace the column switch.
(2) Ignition switch: ON
(3) On completion, check that diagnosis code No.12 is not reset.

Q: Is diagnosis code No.12 set?
YES : Replace the ETACS-ECU.
NO : The procedure is complete.

Diagnosis code 13: Trouble related to the front-ECU or improper connection with the ETACS-ECU

⚠ CAUTION

Whenever the ECU is replaced, ensure that the power supply circuit, the earthing circuit and the communication circuit are normal.

Front-ECU Power Supply and SWS Communication Circuit <LHD>

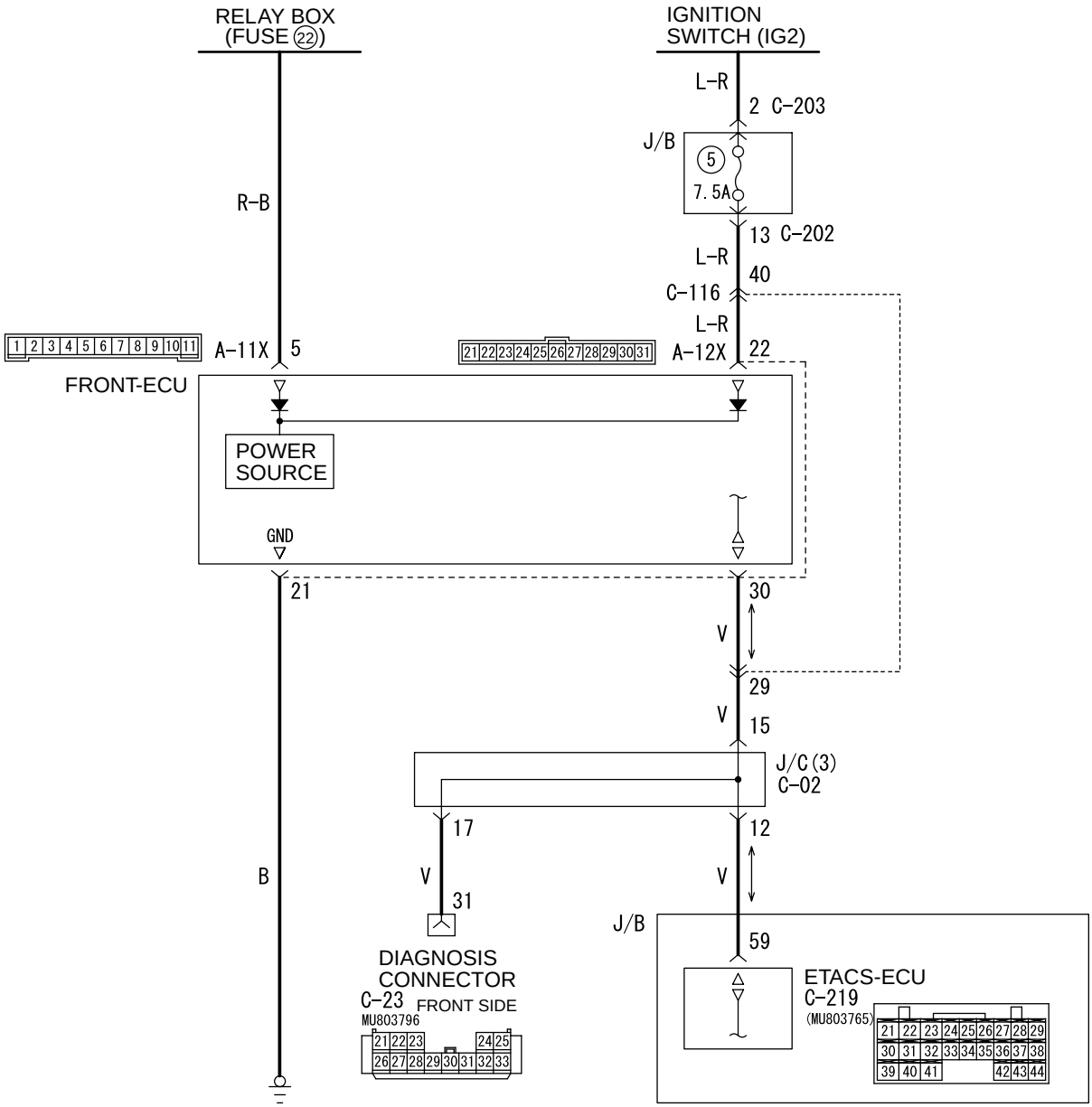

Wire colour code
B : Black LG : Light green G : Green L : Blue W : White Y : Yellow SB : Sky blue
BR : Brown O : Orange GR : Gray R : Red P : Pink V : Violet

W3Z10E04AB

Front-ECU Power Supply and SWS Communication Circuit <RHD>

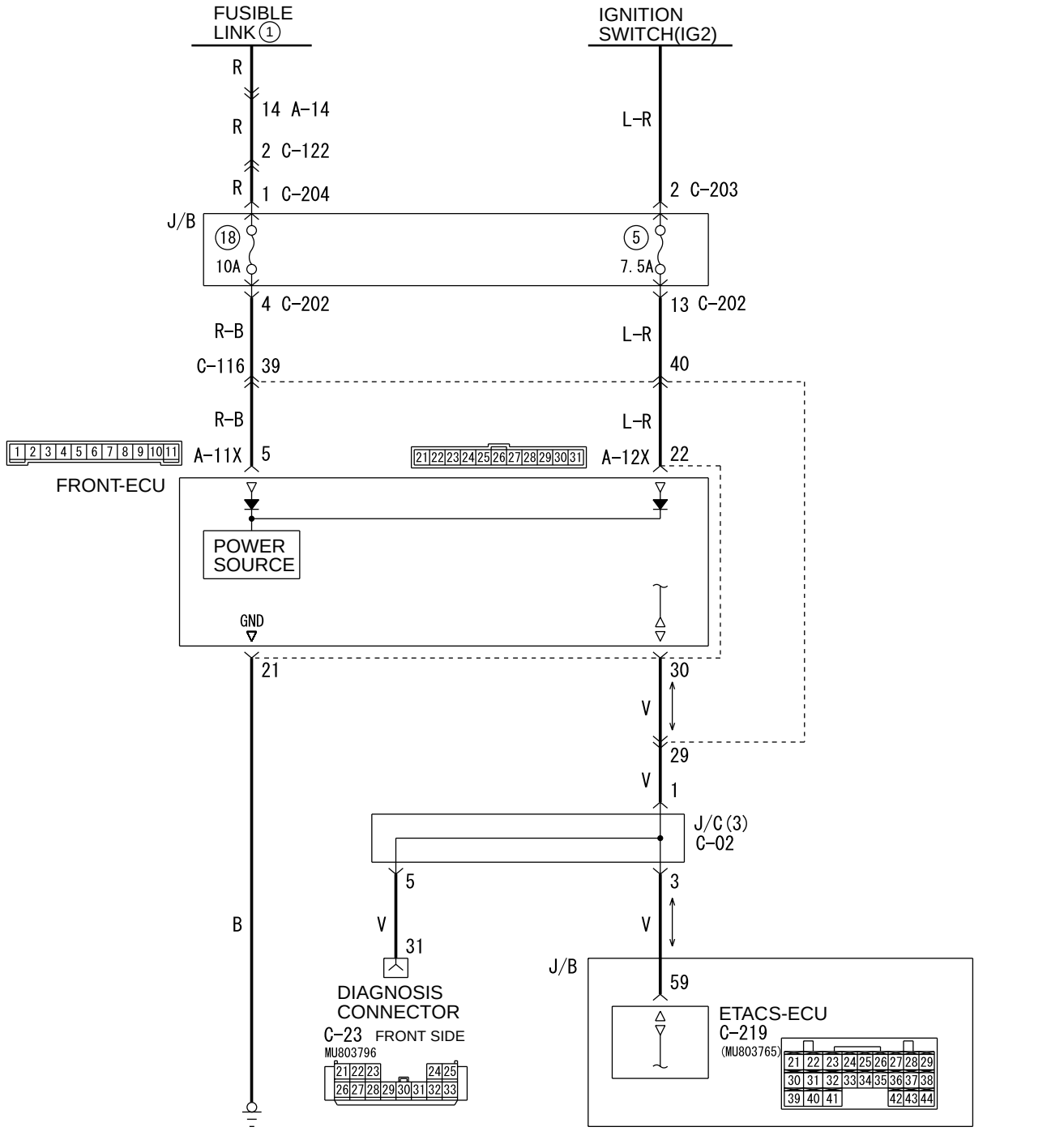

DIAGNOSIS CODE SET CONDITIONS

If the front-ECU has sent abnormal signal to the ETACS-ECU for consecutively 15 communication cycles (0.6 second), the diagnosis code will be set. If the front-ECU has sent normal signal to the ETACS-ECU for consecutively 15 communication cycles (0.6 second), the ETACS-ECU will stop sending the diagnosis code.

POSSIBLE CAUSES

- Malfunction of the front-ECU
- Malfunction of the ETACS-ECU
- Damaged harness wires and connectors

DIAGNOSTIC PROCEDURE

Step 1. Use the MUT-II/III to confirm a diagnosis code. (MUT-II/III diagnosis code)

(1) Ignition switch: ON
(2) On completion, check that diagnosis code No.13 is not reset.

Q: Is diagnosis code No.13 set?
YES : Go to Step 5.
NO : Go to Step 2.

Step 2. Connector check: A-11X front-ECU connector

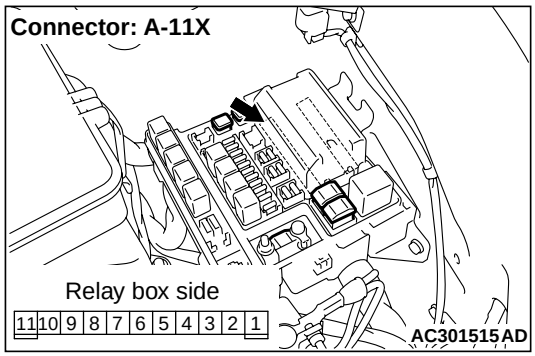

Q: Is the check result normal?
YES : Go to Step 3.
NO : Repair the defective connector.

Step 3. Measure the voltage at A-11X front-ECU connector.

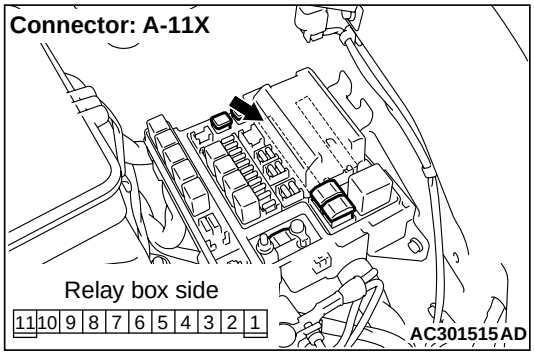

(1) Remove the front-ECU, and measure at the relay box side.

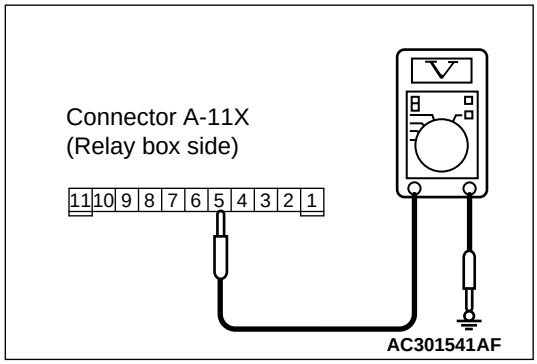

(2) Voltage between A-11X front-ECU connector terminal No.5 and body earth

OK: System voltage

Q: Is the check result normal?
YES : Replace the front-ECU.
NO : Go to Step 4.

Step 4. Check the wiring harness between A-11X front-ECU connector terminal No.5 and the battery.

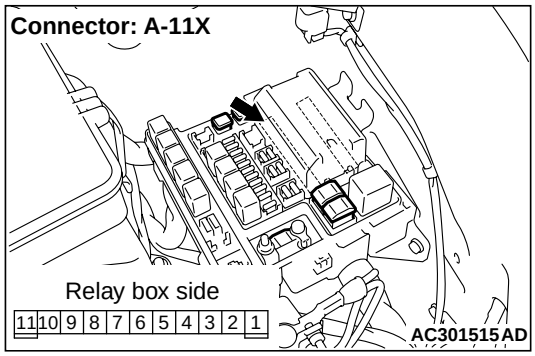

NOTE:

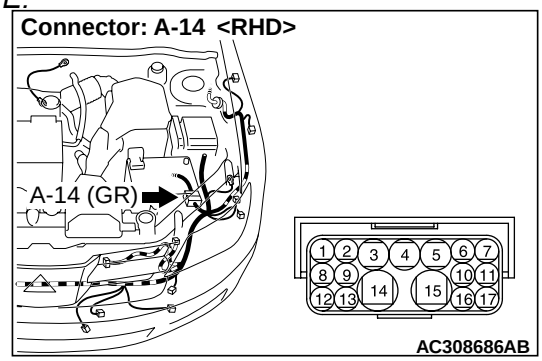

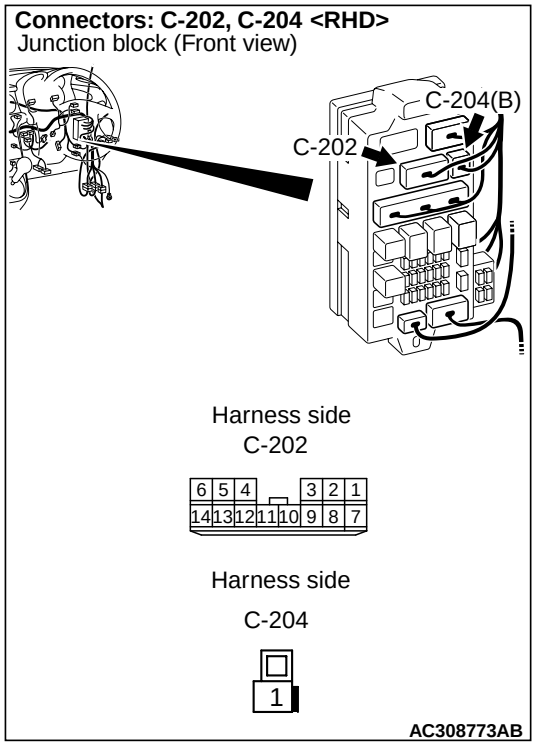

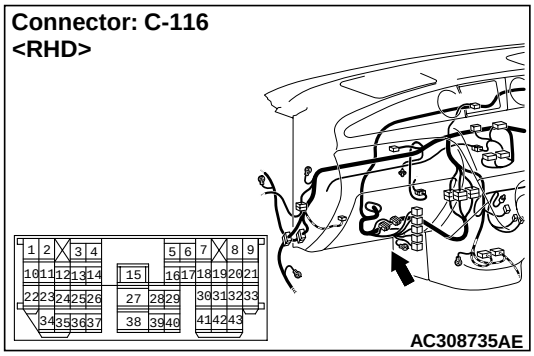

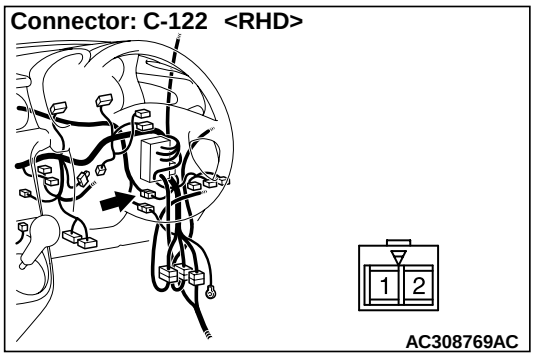

<R.H. drive vehicles> Prior to the wiring harness inspection, check intermediate connectors A-14, C-116, C-122, junction block connectors C-202 and C-204, and repair if necessary.

- Check the power supply line for open circuit.

Q: Is the check result normal?

YES : The trouble can be an intermittent malfunction (Refer to GROUP 00 – How to Cope with Intermittent Malfunction P.00-6).

NO : Repair the wiring harness.

Step 5. Connector check: A-12X front-ECU connector

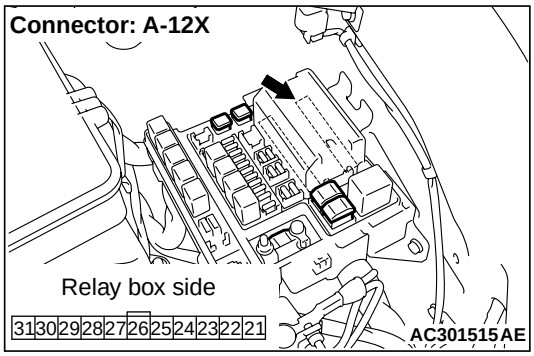

Q: Is the check result normal?

YES : Go to Step 6.

NO : Repair the defective connector.

Step 6. Measure the resistance at A-12X front-ECU connector.

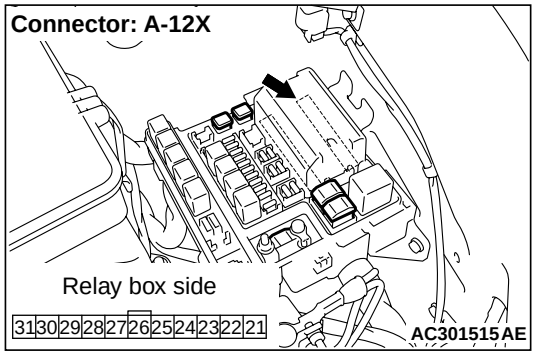

(1) Remove the front-ECU, and measure at the relay box side.

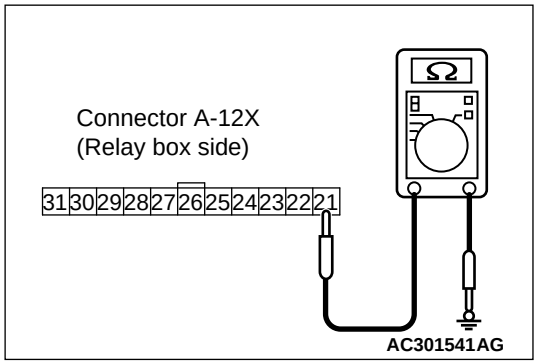

(2) Resistance between A-12X front-ECU connector terminal No.21 and body earth

OK: 2 Ω or less

Q: Is the check result normal?
YES : Go to Step 8.
NO : Go to Step 7.

Step 7. Check the wiring harness between A-12X front-ECU connector terminal No.21 and the body earth.

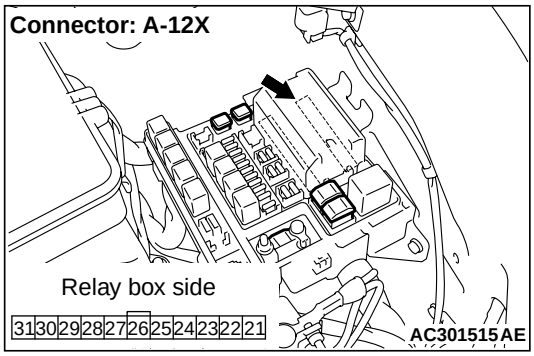

- Check the earth wires for open circuit.

Q: Is the check result normal?
YES : The trouble can be an intermittent malfunction (Refer to GROUP 00 – How to Cope with Intermittent Malfunction P.00-6).
NO : Repair the wiring harness.

Step 8. Connector check: C-219 ETACS-ECU connector

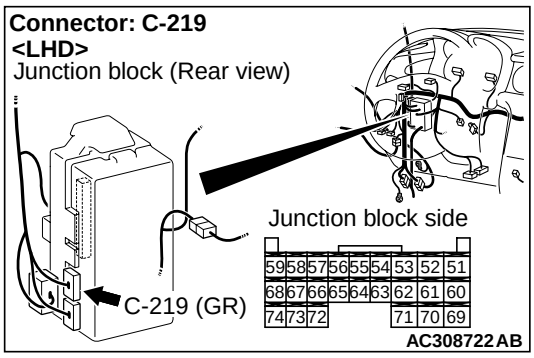

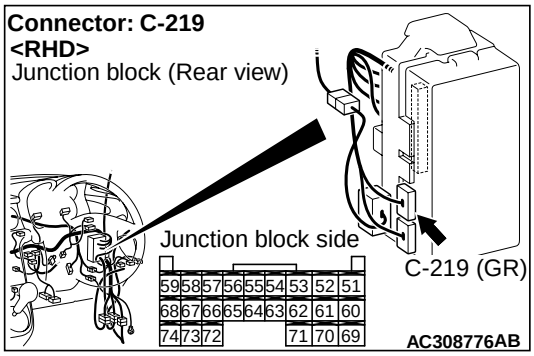

Q: Is the check result normal?
YES : Go to Step 9.
NO : Repair the defective connector.

Step 9. Check the wiring harness between C-219 ETACS-ECU connector terminal No.59 and A-12X front-ECU connector terminal No.30.

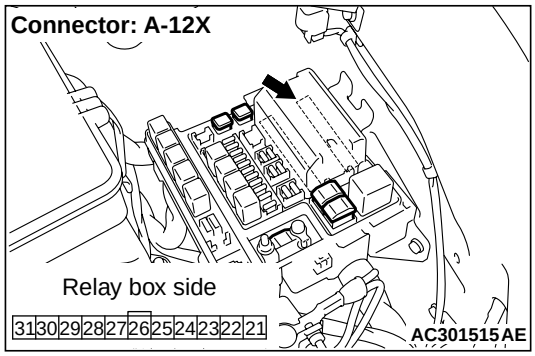

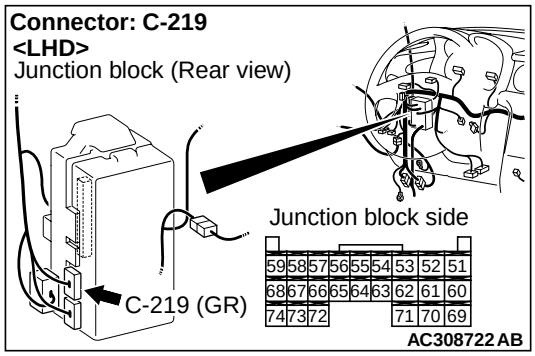

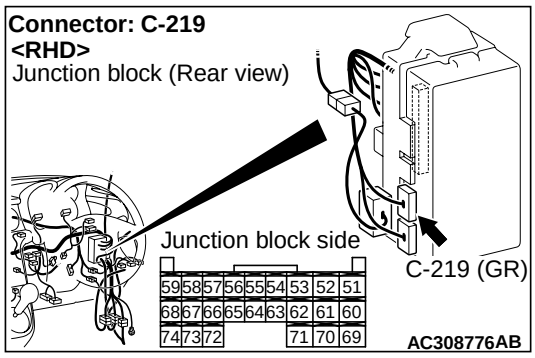

NOTE:

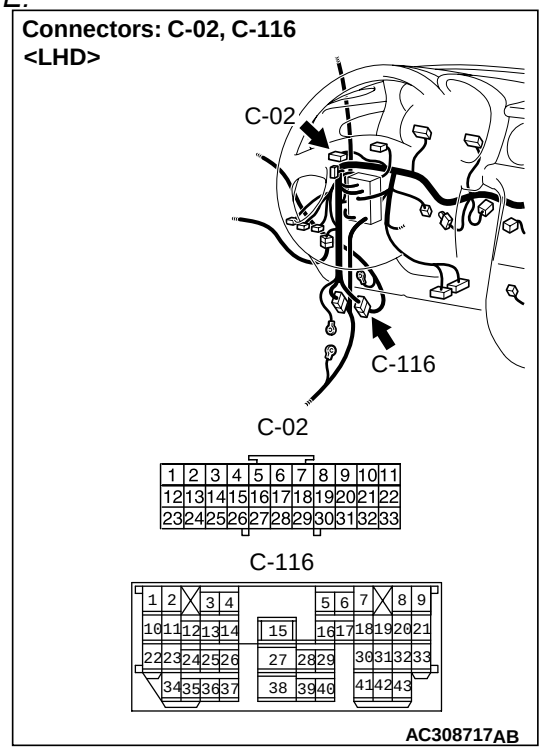

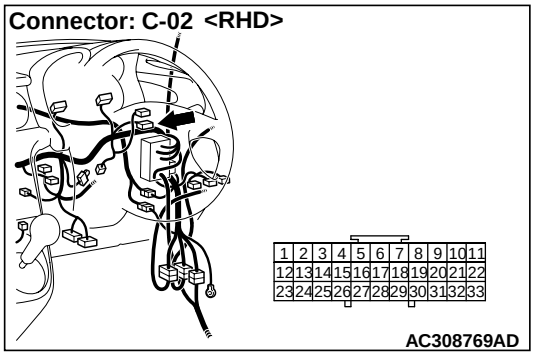

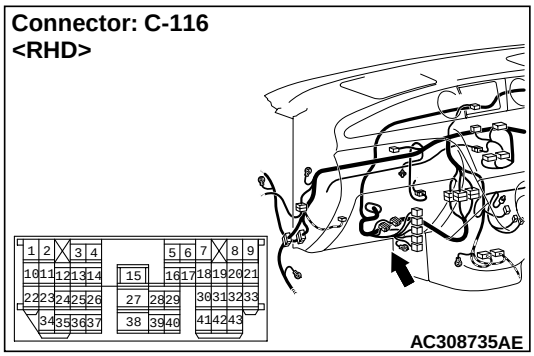

Prior to the wiring harness inspection, check joint connector C-02 and intermediate connector C-116, and repair if necessary.

- Check the communication lines for open circuit.

Q: Is the check result normal?
YES : Go to Step 10.
NO : Repair the wiring harness.

Step 10. Check whether the diagnosis code is reset.

Replace the column switch, and then check that the diagnosis code is not reset.

(1) Replace the column switch.
(2) Ignition switch: ON
(3) On completion, check that diagnosis code No.13 is not reset.

Q: Is diagnosis code No.13 set?
YES : Replace the ETACS-ECU.
NO : The procedure is complete.

Diagnosis code 21: Short circuit in SWS communication line

⚠ CAUTION

Whenever the ECU is replaced, ensure that the communication circuit is normal.

SWS Communication Line <LHD>

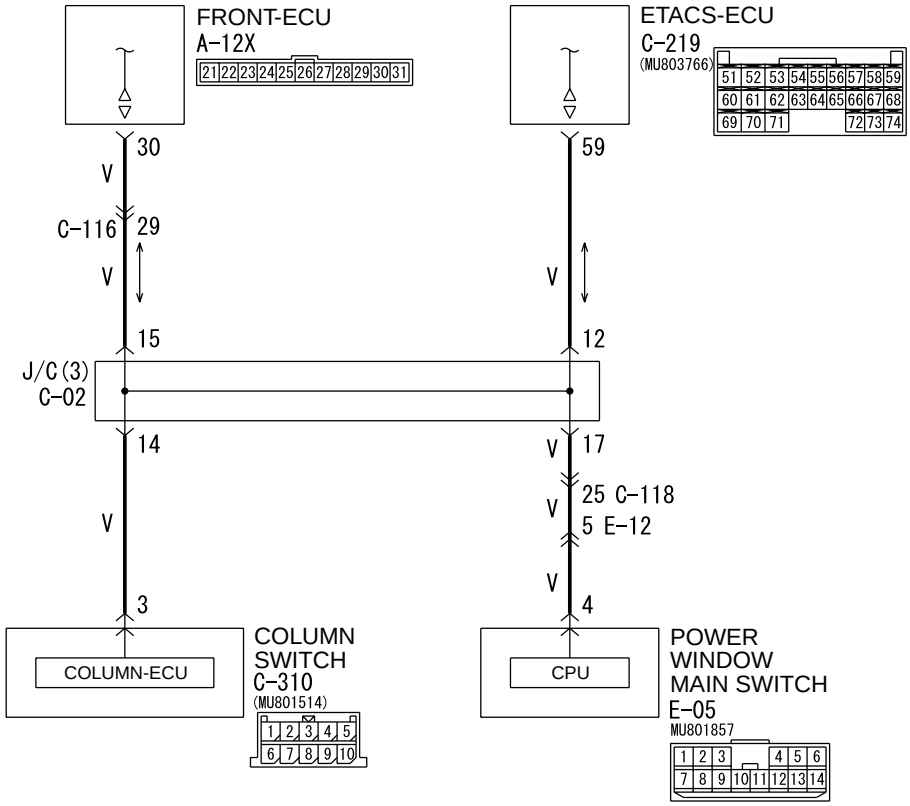

Wire colour code
B : Black LG : Light green G : Green L : Blue W : White Y : Yellow SB : Sky blue
BR : Brown O : Orange GR : Gray R : Red P : Pink V : Violet

W4Z54E02AA

SWS Communication Line <RHD>

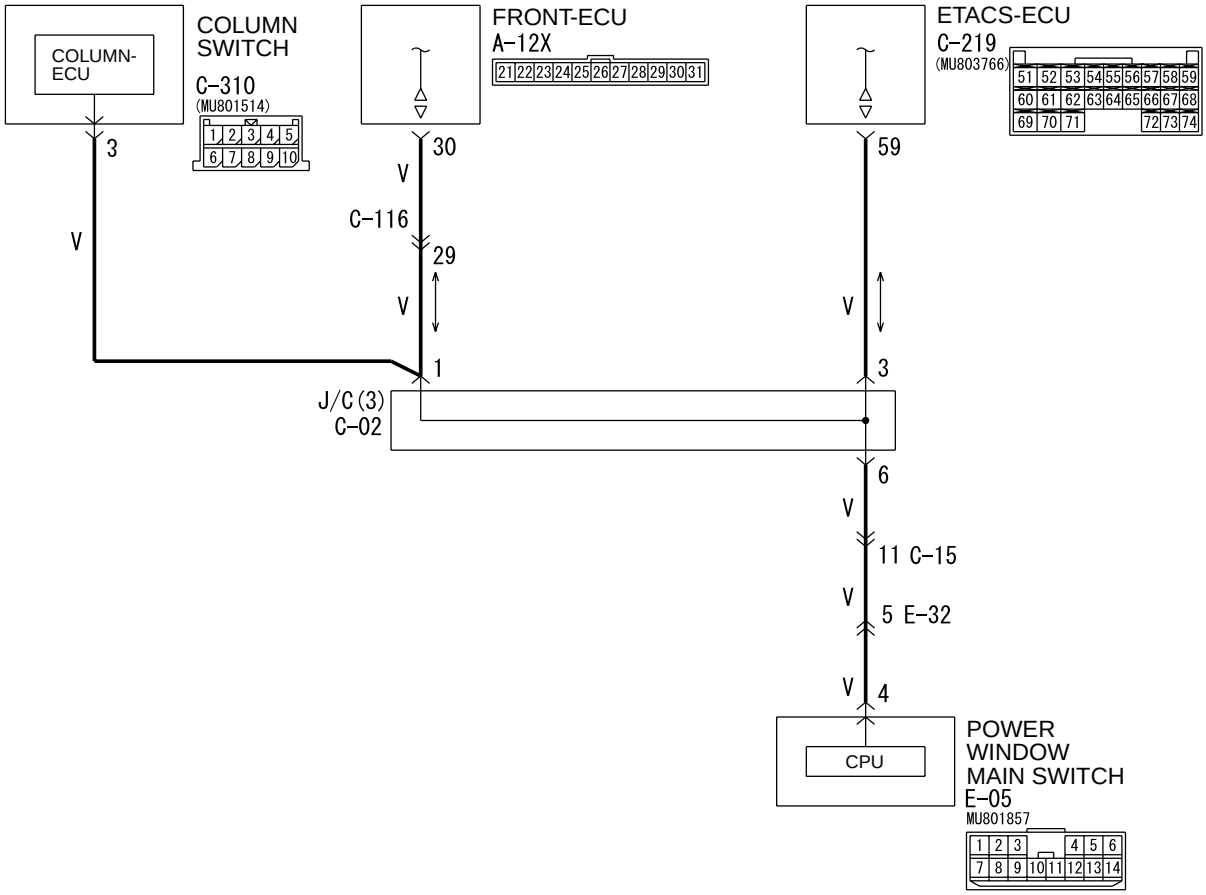

Wire colour code
B : Black LG : Light green G : Green L : Blue W : White Y : Yellow SB : Sky blue
BR : Brown O : Orange GR : Gray R : Red P : Pink V : Violet

W4Z54E03AA

DIAGNOSIS CODE SET CONDITIONS

If the SWS communication line voltage is kept at low level for 0.3 second, the diagnosis code will be set. If the ETACS-ECU data line voltage is kept at high level for 0.3 second, or the ETACS-ECU has received normal signal from the other ECUs or switches, the ETACS-ECU will stop sending the diagnosis code. While this code is set, the other codes will not be set.

POSSIBLE CAUSES

- Malfunction of the column switch
- Malfunction of the front-ECU
- Malfunction of the power window main switch
- Malfunction of the ETACS-ECU
- Damaged harness wires and connectors

DIAGNOSTIC PROCEDURE

Step 1. Connector check: A-12X front-ECU connector, C-310 column switch connector, C-219 ETACS-ECU connector and E-05 power window main switch connector

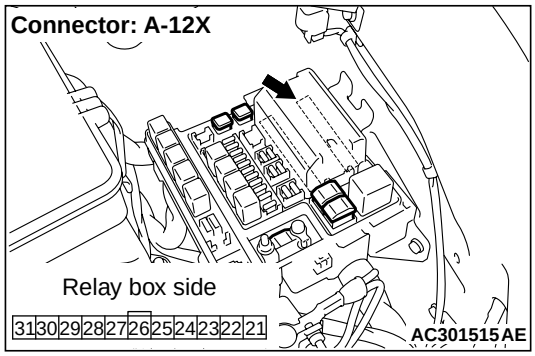

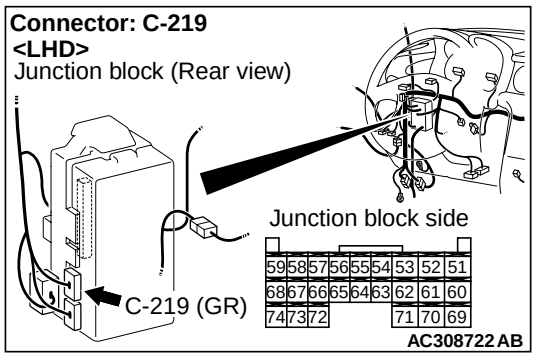

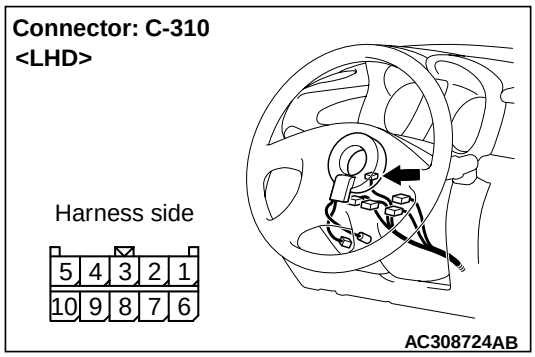

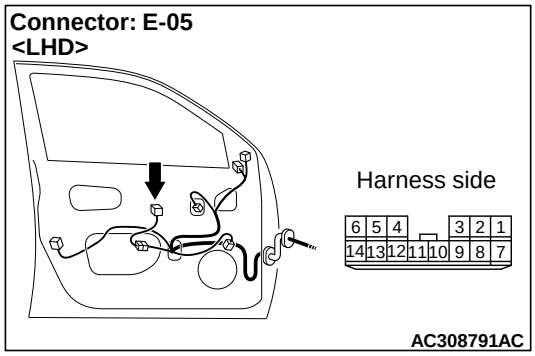

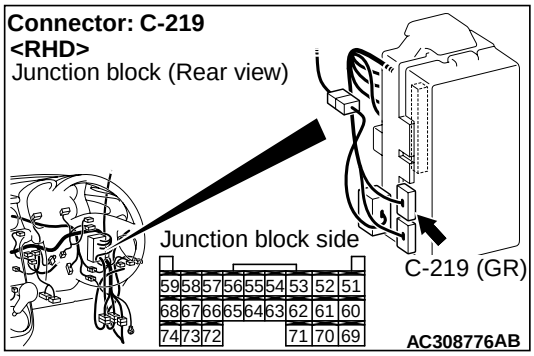

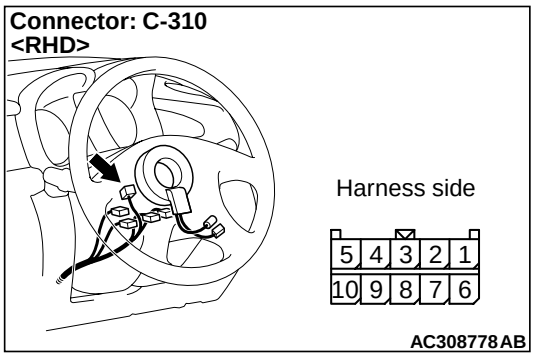

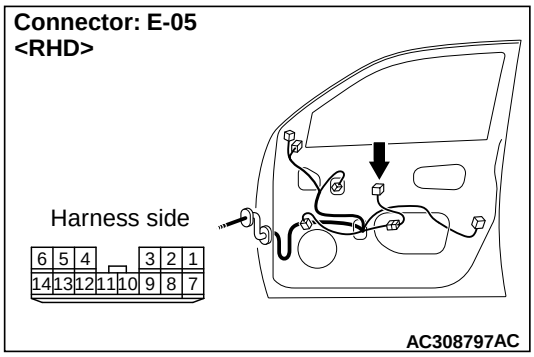

Q: Is the check result normal?

YES : Go to Step 2.

NO : Repair the defective connector.

Step 2. Check the wiring harness from each of A-12X front-ECU connector terminal No.30, C-310 column switch connector terminal No.3 and E-05 power window main switch connector terminal No.4 to C-219 ETACS-ECU connector terminal No.59.

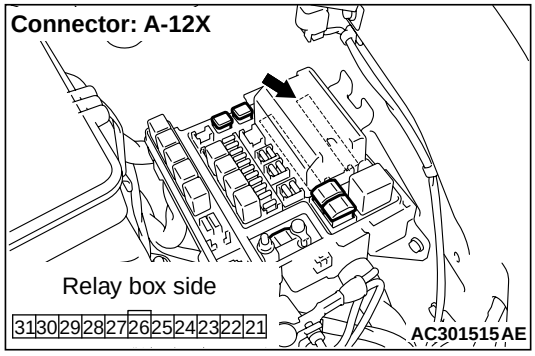

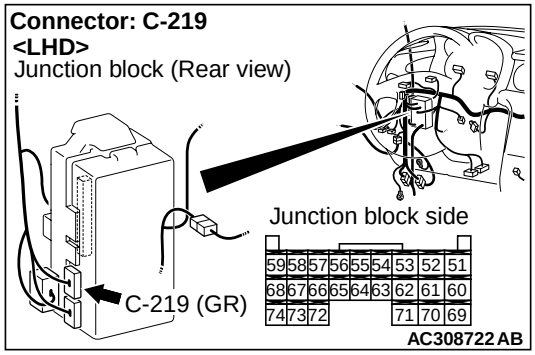

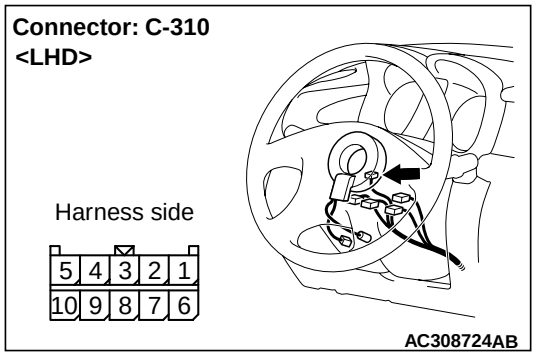

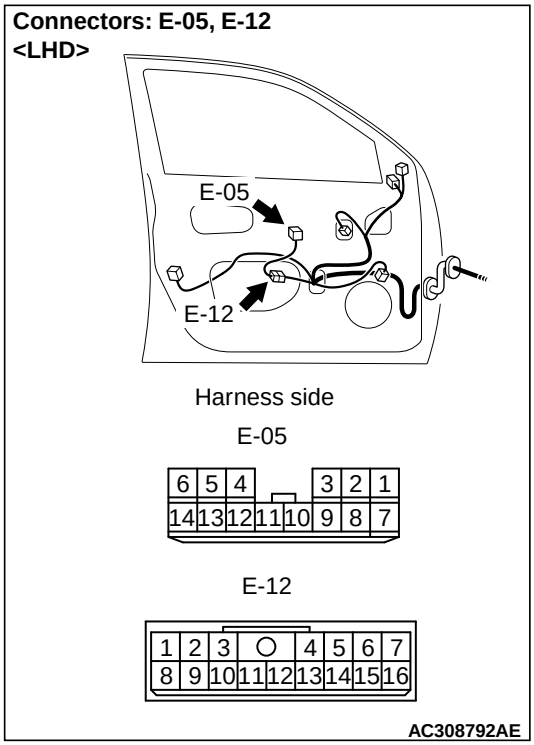

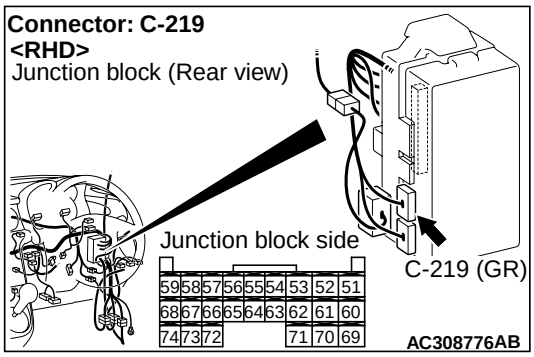

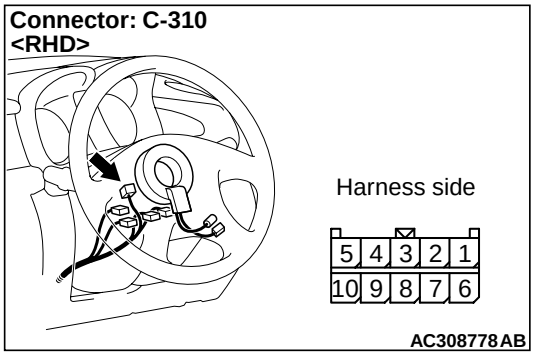

Connector: E-05, E-32
<RHD>

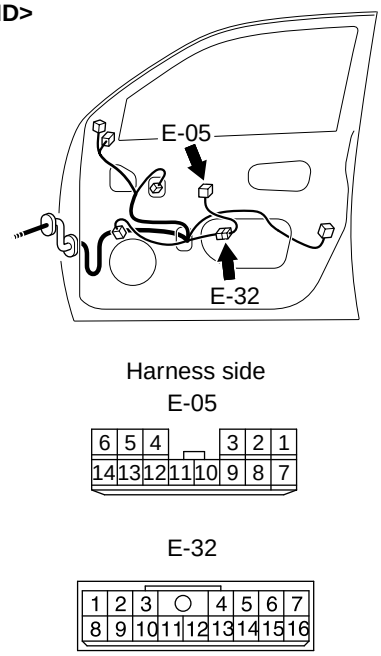

AC308798AB

NOTE:

Connectors: C-02, C-116, C-118
<LHD>

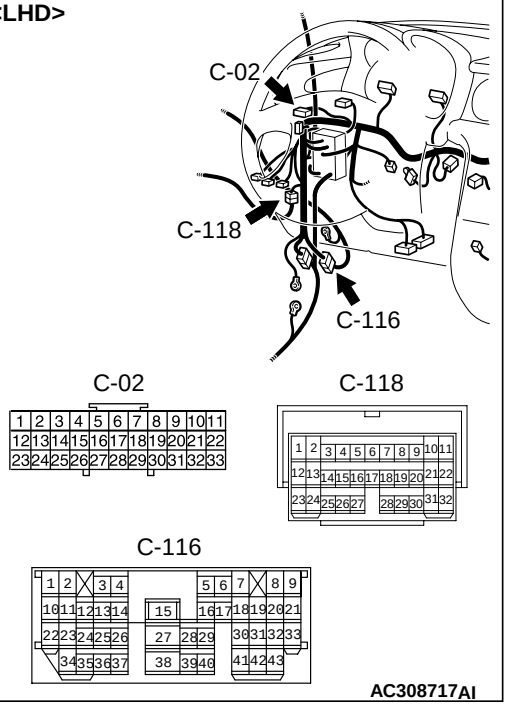

AC308717AI

<L.H. drive vehicles> Prior to the wiring harness inspection, check joint connector C-02, intermediate connectors C-116, C-118 and E-12, and repair if necessary.

NOTE:

Connectors: C-02, C-15 <RHD>

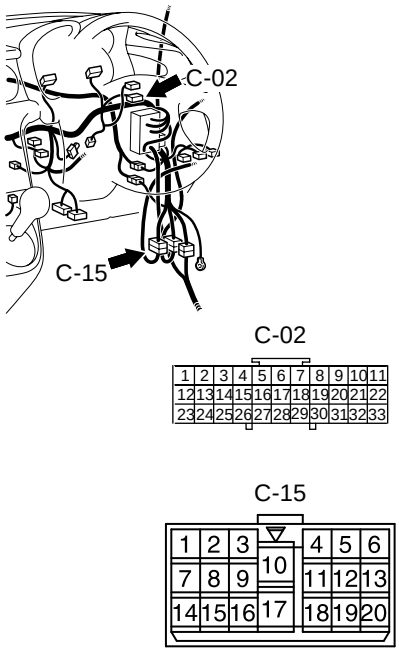

AC308770AD

Connector: C-116
<RHD>

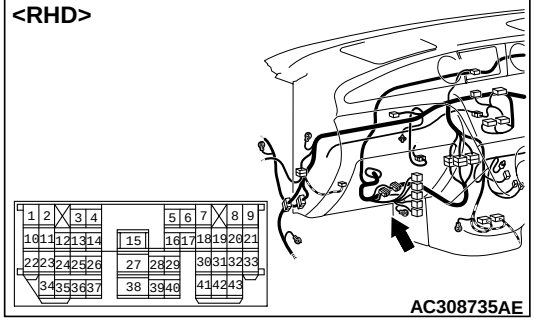

AC308735AE

<R.H. drive vehicles> Prior to the wiring harness inspection, check joint connector C-02, intermediate connectors C-15, C-116 and E-32, and repair if necessary.

- Check the communication lines for open circuit.

Q: Is the check result normal?
YES : Go to Step 3.
NO : Repair the wiring harness.

Step 3. Check the wiring harness between C-310 column switch connector terminal No.2 and C-219 ETACS-ECU connector terminal No.68.

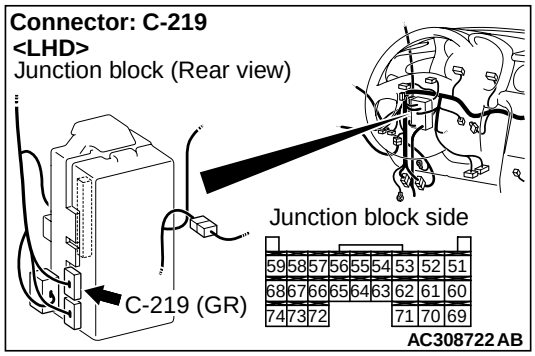

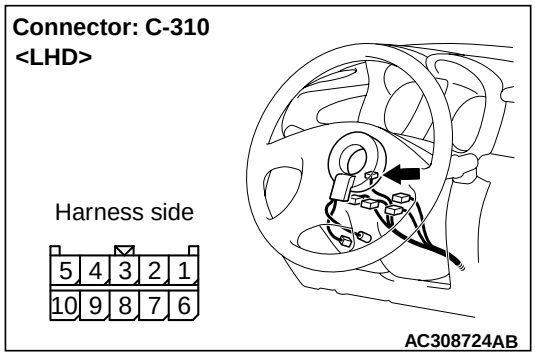

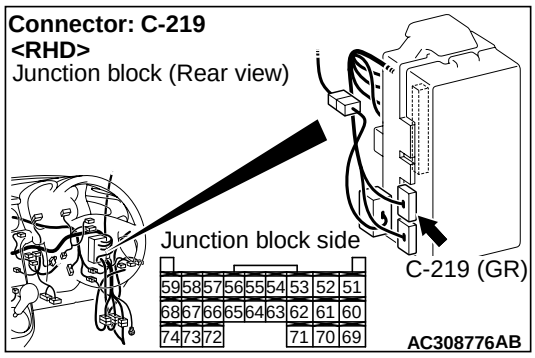

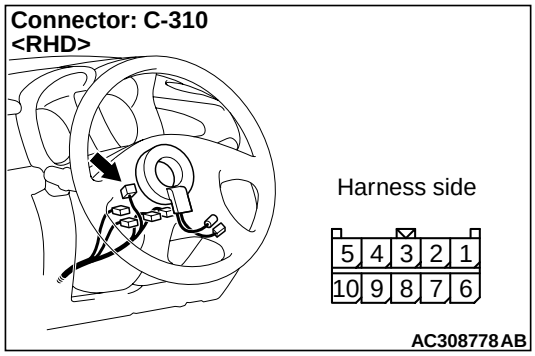

- Check the communication lines for open circuit.

Q: Is the check result normal?
YES : Go to Step 4.
NO : Repair the wiring harness.

Step 4. Check whether the diagnosis code is reset.

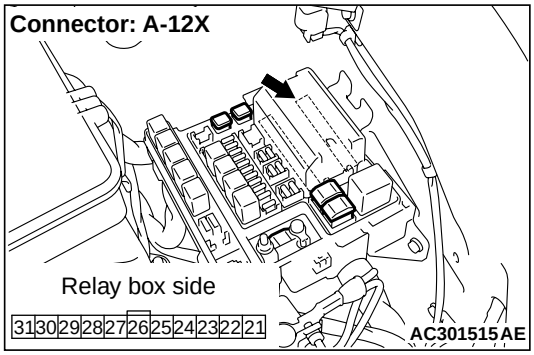

When A-12X front-ECU connector is disconnected, check that diagnosis code No.21 is not reset. However, diagnosis code No.13 will be set at this time.

Q: Is diagnosis code No.21 set?
YES : Replace the front-ECU.
NO : Go to Step 5.

Step 5. Check whether the diagnosis code is reset.

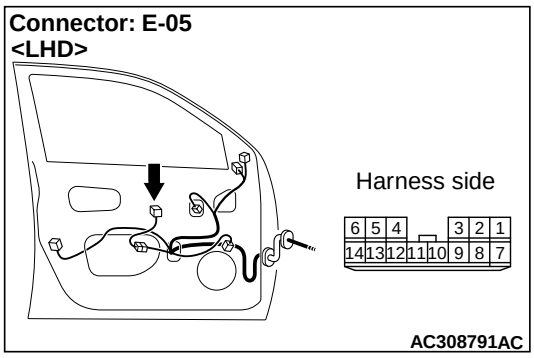

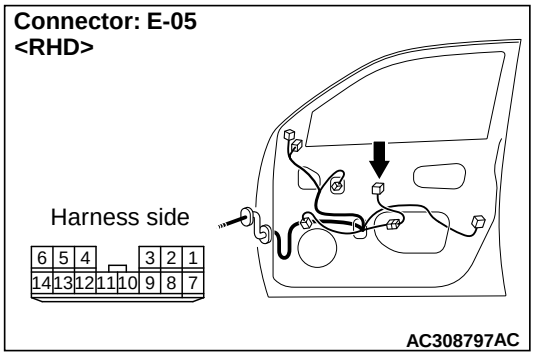

When E-05 power window main switch connector is disconnected, check that diagnosis code No.21 is not reset.

Q: Is diagnosis code No.21 set?
YES : Replace the power window main switch.
NO : Go to Step 6.

Step 6. Check that the hazard warning lamps illuminate.
When the ignition switch is turned to the LOCK (OFF) position, check if the hazard warning lamps illuminate.

Q: Is the check result normal?

YES : Refer to diagnosis code No.12 "Column switch fault or improper connection P.54B-18."
NO : Refer to inspection procedure A-2 "Check the ETACS-ECU battery power supply circuit P.54B-52."

Diagnosis code 31: Open circuit in signal line between the SRS-ECU and the ETACS-ECU (impact detection signal)
Diagnosis code 32: Short circuit in signal line between the SRS-ECU and the ETACS-ECU (impact detection signal)

⚠ CAUTION
Whenever the ECU is replaced, ensure that the input signal circuit is normal.

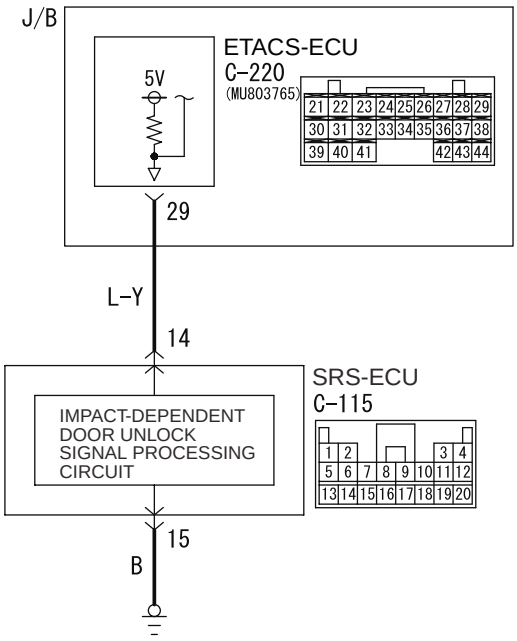

Wire colour code
B : Black LG : Light green
G : Green L : Blue
W : White Y : Yellow
SB : Sky blue BR : Brown
O : Orange GR : Gray
R : Red P : Pink V : Violet

W3Z10E42AA

DIAGNOSIS CODE SET CONDITIONS
If the voltage in the signal line between the SRS-ECU and the ETACS-ECU has exceeded 4.6 V for 40 milliseconds or more, the ETACS-ECU will set diagnosis code No.31 as an open circuit. If the signal line voltage has reached 1.5 V or less for at least 2.5 seconds, the ETACS-ECU will set diagnosis code No.32 as a short circuit. If the ignition switch is turned off, the ETACS-ECU will stop sending the diagnosis code.

POSSIBLE CAUSES
- Malfunction of the SRS-ECU
- Malfunction of the ETACS-ECU
- Damaged harness wires and connectors

DIAGNOSTIC PROCEDURE

Step 1. Use the MUT-II/III to confirm a diagnosis code.
Check that the SRS-ECU sets a diagnosis code.

Q: Is the check result normal?
YES : Go to Step 2.
NO : Refer to GROUP 52B – Troubleshooting P.52B-11.

Step 2. Connector check: C-115 SRS-ECU connector and C-220 ETACS-ECU connector

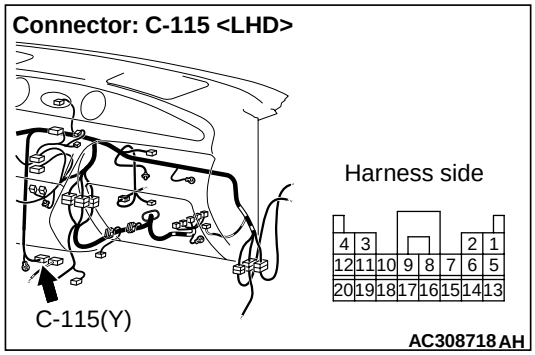

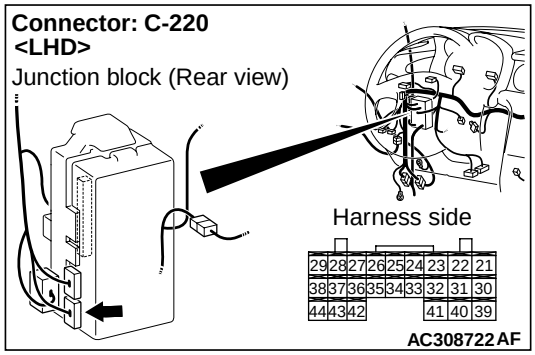

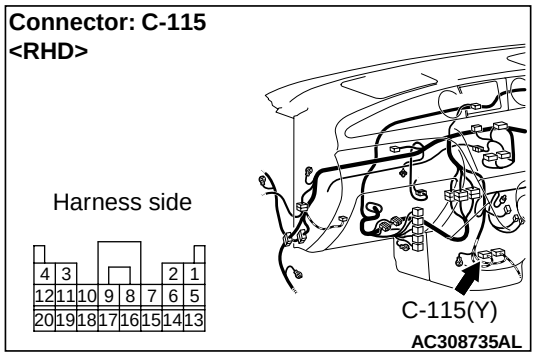

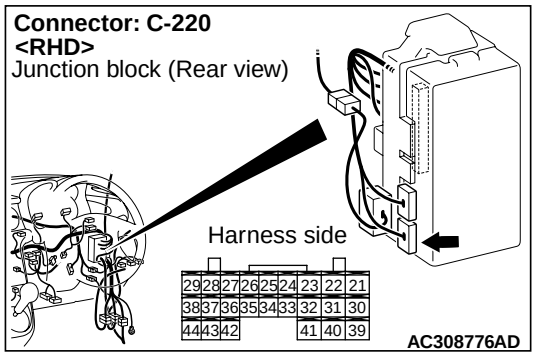

Q: Is the check result normal?
YES : Go to Step 3.
NO : Repair the defective connector.

Step 3. Measure the resistance at the C-115 SRS-ECU connector.

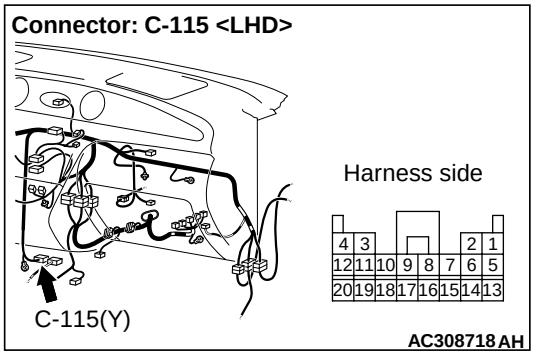

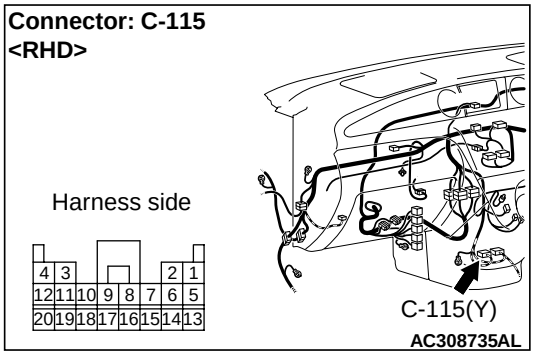

(1) Disconnect the connector, and measure at the wiring harness side.

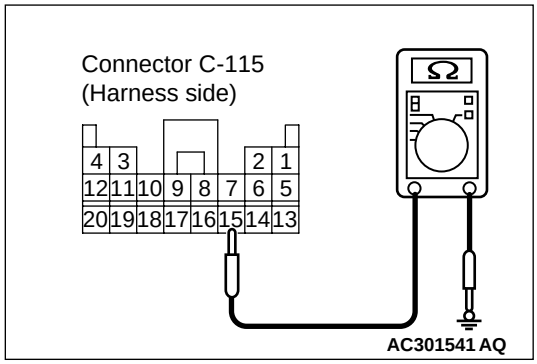

(2) Resistance between C-115 SRS-ECU connector terminal No.15 and body earth

OK: 2 Ω or less

Q: Is the check result normal?
YES : Go to Step 5.
NO : Go to Step 4.

Step 4. Check the wiring harness between C-115 SRS-ECU connector terminal No.15 and body earth.

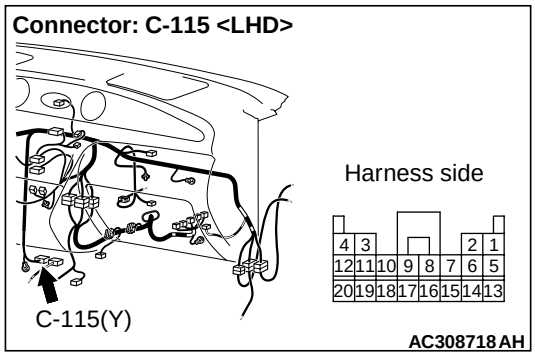

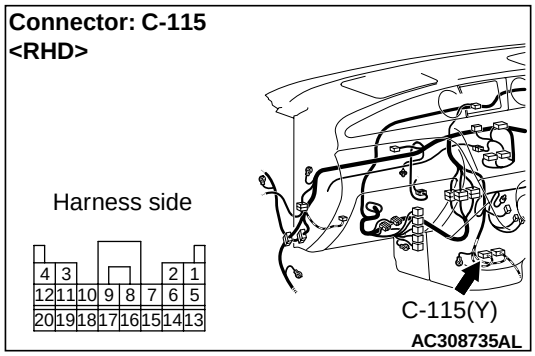

- Check the earth wires for open circuit.

Q: Is the check result normal?
YES : The trouble can be an intermittent malfunction (Refer to GROUP 00 – How to Cope with Intermittent Malfunction P.00-6).
NO : Repair the wiring harness.

Step 5. Check the wiring harness between C-220 ETACS-ECU connector terminal No.29 and C-115 SRS-ECU connector terminal No.14.

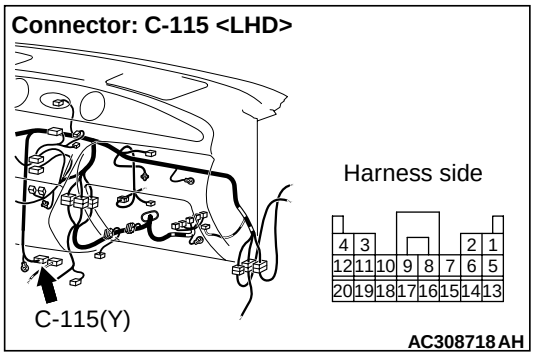

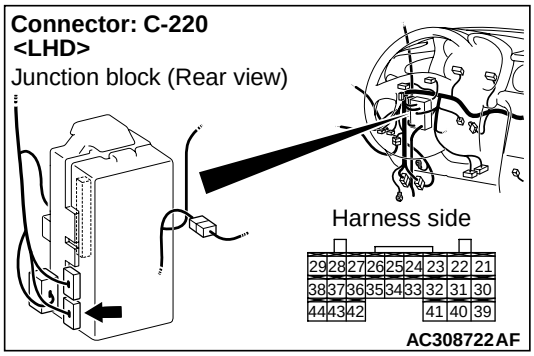

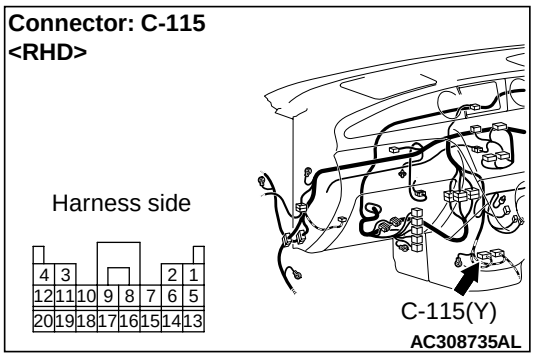

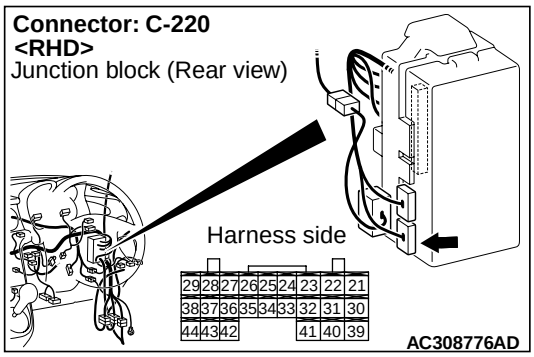

- Check the communication lines for open circuit.

Q: Is the check result normal?
YES : Go to Step 6.
NO : Repair the wiring harness.

Step 6. Check whether the diagnosis code is reset.

Replace the ETACS-ECU, and then check that the diagnosis code is not reset.

(1) Replace the ETACS-ECU.
(2) Ignition switch: ON
(3) Check that diagnosis code No.31 or 32 is not reset.

Q: Is diagnosis code No.31 or 32 set?
YES : Replace the SRS-ECU.
NO : The procedure is complete.

TROUBLE SYMPTOM CHART

M1549000800781

Symptom	Inspection procedure number	Reference page
Communication with the MUT-II/III is not possible.	A-1	P.54B-48
When the ignition switch is at the LOCK (OFF) position, the functions do not work normally.	A-2	P.54B-52
Check the battery power supply circuit to the ETACS-ECU.		

<Function system>

Symptom		Inspection procedure number	Reference page
Alarm Function	Lamp reminder buzzer function does not work normally.	B-1	P.54B-58
Central door locking	Central door locking system does not work. <L.H. drive vehicles>	C-1	P.54B-60
	Central door locking system does not work. <R.H. drive vehicles>		P.54B-63
	A door or a tailgate can not be locked or unlocked by the central door locking system. <L.H. drive vehicles>	C-2	P.54B-66
	A door or a tailgate can not be locked or unlocked by the central door locking system. <R.H. drive vehicles>		P.54B-74
	The central door locking system can not be operated by means of the front passenger's door lock key cylinder.	C-3	P.54B-82
	The ignition key reminder function does not work normally.	C-4	P.54B-84
	The impact detection door unlock function does not function.	C-5	P.54B-85

Symptom		Inspection procedure number	Reference page
Power window	Power windows do not work at all.	D-1	P.54B-86
	Driver's power window does not work by means of the power window main switch. <L.H. drive vehicles>	D-2	P.54B-97
	Driver's power window does not work by means of the power window main switch. <R.H. drive vehicles>		P.54B-102
	Relevant power window(s) do not work by means of the front and rear passenger's power window sub switches.	D-3	P.54B-107
	Front and/or rear passenger's power window(s) do not work by means of the power window main switch.	D-4	P.54B-125
	The window glass lowers automatically while it is rising.	D-5	P.54B-135
	Power window anti-trap function does not work normally.	D-6	P.54B-135
Keyless entry system	Keyless entry system does not work.	E-1	P.54B-148
	Keyless entry hazard lamp answerback function or the room lamp answerback function does not work normally.	E-2	P.54B-150
	Encrypted code cannot be registered.	E-3	P.54B-151
	The timer lock function does not work after the doors have been unlocked by the keyless entry system.	E-4	P.54B-152
Windshield wiper and washer	The windshield wipers do not work at all.	F-1	P.54B-153
	The windshield wipers does not work when the wiper switch is at "INT", "WASHER" or "MIST" position. However, the wipers work at low speed when the switch is at "LO" and "HI" position.	F-2	P.54B-161
	The windshield wipers do not stop at the specified park position.	F-3	P.54B-163
	The windshield wipers does not work normally.	F-4	P.54B-170
	The intermittent wiper interval can not be adjusted by operating the windshield intermittent wiper volume control.	F-5	P.54B-178
	The intermittent wiper interval is not changed according to the vehicle speed.	F-6	P.54B-179
	The windshield washer does not work.	F-7	P.54B-181

Symptom		Inspection procedure number	Reference page
Rear wiper and washer	The rear wiper does not work at all.	G-1	P.54B-185
	The rear wiper does not stop at the specified park position.	G-2	P.54B-190
	When the shift lever <M/T> or selector lever <A/T> is moved to "R" position during the rear wiper operation, the rear wiper does not operate at the continuous mode.	G-3	P.54B-195
	The rear washer does not work.	G-4	P.54B-196
Headlamp washer	The headlamp washer does not work.	H-1	P.54B-200
Ignition key cylinder illumination lamp	The ignition key cylinder illumination lamp does not illuminate/extinguish normally.	I-1	P.54B-204
Headlamp and tail lamp	The tail lamps do not illuminate normally.	J-1	P.54B-208
	The low-beam headlamps do not illuminate normally.	J-2	P.54B-210
	The high-beam headlamps do not illuminate normally.	J-3	P.54B-213
	The high-beam and low-beam headlamps do not illuminate when the passing switch is operated.	J-4	P.54B-214
	The headlamp automatic-shutdown function does not work normally.	J-5	P.54B-215
	Any of tail lamps, position lamps or licence plate lamp does not illuminate.	J-6	P.54B-217
	The headlamp(s) do not illuminate. <including high-beam indicator>	J-7	P.54B-228
Flasher timer	The turn-signal lamps do not illuminate.	K-1	P.54B-236
	The hazard warning lamps do not illuminate.	K-2	P.54B-240
	Any of the turn-signal lamps does not illuminate.	K-3	P.54B-242
Fog lamp	The front fog lamps do not illuminate normally.	L-1	P.54B-259
	The rear fog lamps do not illuminate normally.	L-2	P.54B-262
	Any of the front fog lamps does not illuminate.	L-3	P.54B-268
	Any of the rear fog lamps does not illuminate.	L-4	P.54B-275

Symptom		Inspection procedure number	Reference page
Interior lamp	The front or rear room lamp does not illuminate or extinguish normally. <Vehicles without keyless entry system>	M-1	P.54B-282
	The front and rear room lamp does not illuminate or extinguish normally. <Vehicles with keyless entry system>	M-2	P.54B-287
	Interior lamp automatic shutoff function does not work normally. <Vehicles with keyless entry system>	M-3	P.54B-292
	The door-ajar warning lamp does not illuminate/extinguish normally.	M-4	P.54B-294

CHECK TROUBLE BY USING THE INPUT SIGNAL CHECK

M1549024200255

<Pulse check>

If a problem is found in the Service Data inspection, observe the table below.

Symptom		Inspection procedure number	Reference page
The ignition switch (ACC) signal is not received.		N-1	P.54B-298
The ignition switch (IG1) signal is not received.		N-2	P.54B-301
The back-up lamp switch signal is not received. <M/T>		N-3	P.54B-304
The inhibitor switch (reverse position) signal is not received. <A/T>			P.54B-309
The front door switch (LH) signal is not received. <L.H. drive vehicles>		N-4	P.54B-315
The front door switch (RH) signal is not received. <R.H. drive vehicles>			P.54B-317
Column switch (lighting and turn-signal lamp switch)	The tail lamp switch signal is not received.	N-5	P.54B-319
	The headlamp switch signal is not received.		
	The dimmer switch signal is not received.		
	The passing switch signal is not received.		
	The turn-signal lamp switch (LH) signal is not received.		
	The turn-signal lamp switch (RH) signal is not received.		
	The headlamp washer switch signal is not received.		
Column switch (windshield wiper/washer and rear wiper washer switch)	The windshield mist wiper switch signal is not received.	N-6	P.54B-320
	The windshield intermittent wiper switch signal is not received.		
	The windshield low-speed wiper switch signal is not received.		
	The windshield high-speed wiper switch signal is not received.		
	The windshield washer switch signal is not received.		
	The rear wiper switch signal is not received.		
	The rear washer switch signal is not received.		
	The windshield intermittent wiper volume signal is not received.	N-7	P.54B-321

Symptom		Inspection procedure number	Reference page
Power window main switch	When the power window main switch is operated, the switch signals are not received.	N-8	P.54B-325
The key reminder switch signal is not received.		N-9	P.54B-334
The hazard warning lamp switch signal is not received.		N-10	P.54B-338
All the door switch signals are not received. <L.H. drive vehicles>		N-11	P.54B-342
All the door switch signals are not received. <R.H. drive vehicles>			P.54B-346
The driver's door lock actuator switch signal is not received. <L.H. drive vehicles>		N-12	P.54B-350
The driver's door lock actuator switch signal is not received. <R.H. drive vehicles>			P.54B-354
The vehicle speed signal is not received. <M/T>		N-13	P.54B-358
The vehicle speed signal is not received. <A/T>			P.54B-363
Each switch signal of the keyless entry transmitter is not received.		N-14	P.54B-366
The front fog lamp switch signal is not received.		N-15	P.54B-367
The rear fog lamp switch signal is not received.		N-16	P.54B-371
The interior lamp loaded signal is not detected.		N-17	P.54B-375
The front passenger’s door lock key cylinder switch signal is not detected. <L.H. drive vehicles>		N-18	P.54B-380
The front passenger’s door lock key cylinder switch signal is not detected. <R.H. drive vehicles>			P.54B-383

OPERATION AND FUNCTION QUICK-REFERENCE TABLE FOR INPUT SIGNAL INSPECTION PROCEDURES

M1549020300250

If troubles have occurred in the functions which use the SWS simultaneously, observe the table below to check input signals.

(This table shows only the input signals which will cause troubles in at least two functions simultaneously).

Function	N-1	N-2	N-4	N-5	N-6	N-9	N-11	N-12	N-13	N-17
Lamp reminder function	–	×	×	×	–	–	–	–	–	–
Control of central door locking	–	–	–	–	–	–	–	×	–	–
Key reminder function	–	–	×	–	–	×	–	×	–	–
Door locking released due to impact detection.	–	–	–	–	–	–	–	–	–	–
Keyless entry system	–	–	×	–	–	×	×	×	–	–
Keyless entry hazard warning lamp answerback	–	–	–	–	–	–	–	–	–	–
Power window control	–	×	–	–	–	–	–	–	–	–
Control of windshield wiper washer	×	–	–	–	×	–	–	–	×	–
Rear wiper washer control	×	–	–	–	×	–	–	–	–	–
Ignition key cylinder illumination lamp function	–	×	×	–	–	×	–	–	–	×
Headlamp control	–	×	–	×	–	–	–	–	–	–
Tail lamp control	–	×	–	×	–	–	–	–	–	–
Headlamp automatic-shutdown function	–	×	×	×	–	–	–	–	–	–
Fog lamp control	–	–	–	×	–	–	–	–	–	–
Turn-signal lamp control	–	×	–	×	–	–	–	–	–	–
Dome lamp control	–	×	×	–	–	×	×	×	–	×
Interior lamp automatic-shutdown function	×	–	–	–	–	–	–	–	–	×
Door-ajar indicator lamp	–	–	×	–	–	–	×	–	–	–

SYMPTOM PROCEDURES

INSPECTION PROCEDURE A-1: Communication with the MUT-II/III is not possible

⚠ CAUTION

Whenever the ECU is replaced, ensure that the power supply circuit, the earthing circuit and the communication circuit are normal.

MUT-II Communication and ETACS-ECU Earth Circuit <LHD>

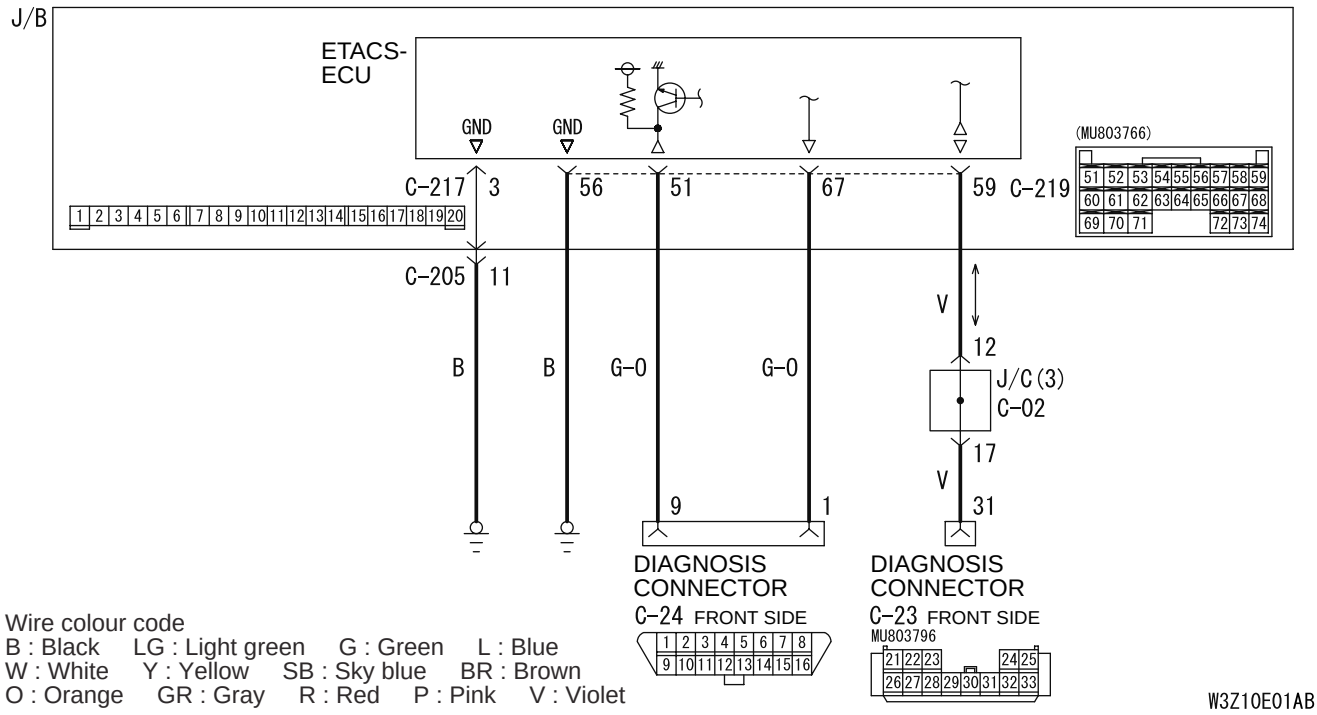

MUT-II Communication and ETACS-ECU Ground Circuit <RHD>

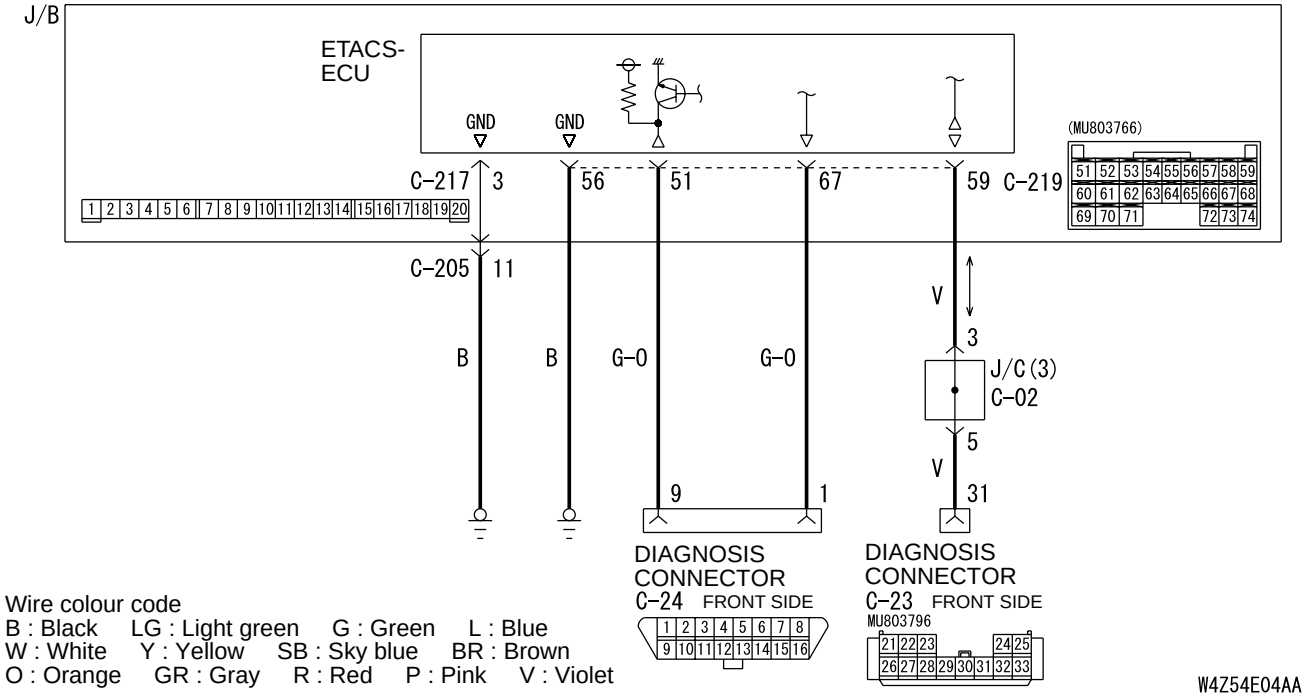

COMMENTS ON TROUBLE SYMPTOM

It is suspected that the power supply circuit to the ETACS-ECU is defective, or the wiring harness between the diagnosis connector and the ETACS-ECU or their connector(s) is damaged.

NOTE: If the wiring harness between the ETACS-ECU and body earth is defective, also check C-217 ETACS-ECU connector terminal No.3, and repair if necessary.

POSSIBLE CAUSES

- Malfunction of the ETACS-ECU
- Damaged harness wires and connectors

DIAGNOSTIC PROCEDURE

Step 1. Check that the MUT-II/III communicates with the other systems.

Use the MUT-II/III to confirm that it communicates with the engine-ECU.

Q: Is the check result normal?

YES : Go to Step 2.

NO : Diagnose the engine control system by referring to P.13B-285 <4G63> or P.13A-190 <4G69>.

Step 2. Check that the MUT-II/III can communicate with the system.

When the ignition switch is turned ON, check if the MUT-II/III can communicate with the system.

Q: Is the check result normal?

YES : Refer to inspection procedure A-2 "Check the ETACS-ECU battery power supply circuit" P.54B-52.

NO : Go to Step 3.

Step 3. Connector check: C-219 ETACS-ECU connector

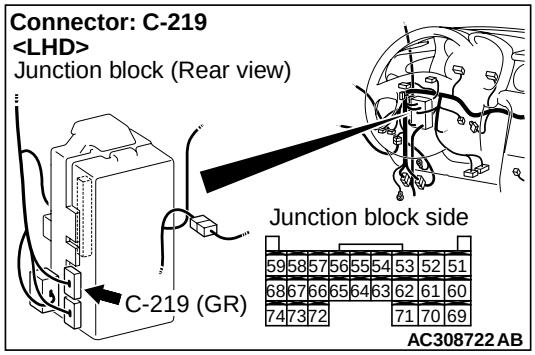

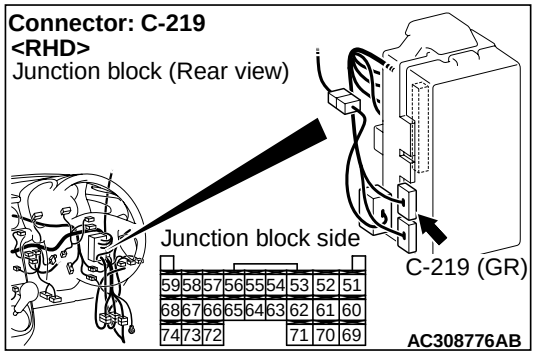

Q: Is the check result normal?
YES : Go to Step 4.
NO : Repair the defective connector.

Step 4. Measure the resistance at the C-219 ETACS-ECU connector.

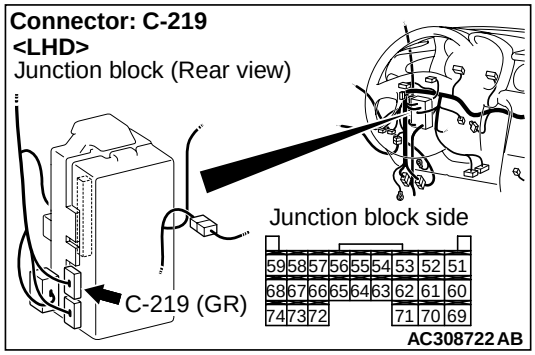

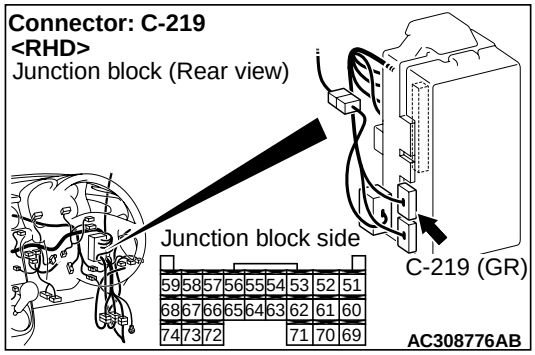

(1) Disconnect the connector, and measure at the junction block side.

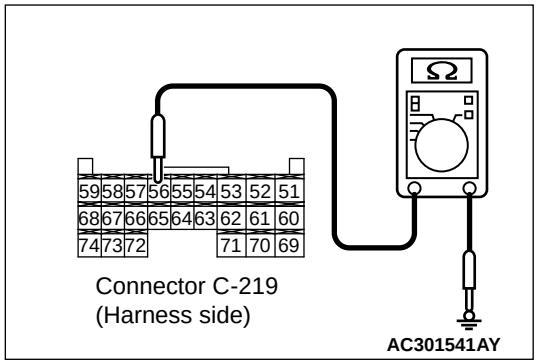

(2) Resistance between C-219 ETACS-ECU connector terminal No.56 and body earth

OK: 2 Ω or less

Q: Is the check result normal?
YES : Go to Step 6.
NO : Go to Step 5.

Step 5. Check the wiring harness between C-219 ETACS-ECU connector terminal No.56 and body earth.

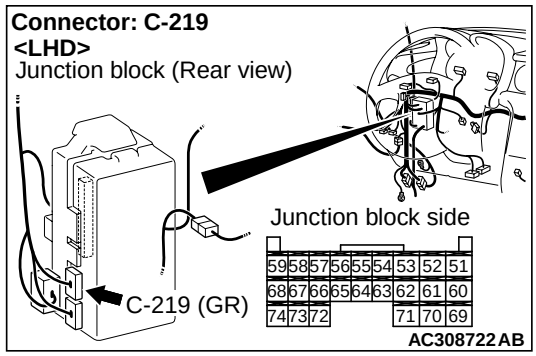

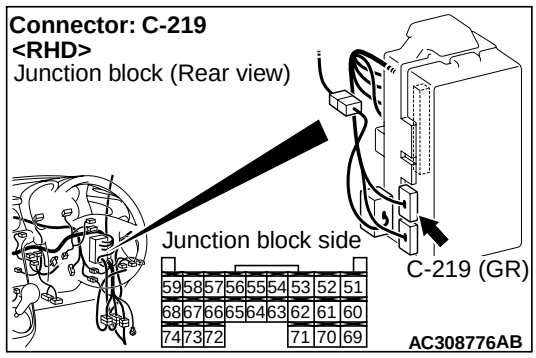

- Check the earth wires for open circuit.

Q: Is the check result normal?
YES : The trouble can be an intermittent malfunction (Refer to GROUP 00 – How to Cope with Intermittent Malfunction P.00-6).
NO : Repair the wiring harness.

Step 6. Connector check: C-24 diagnosis connector

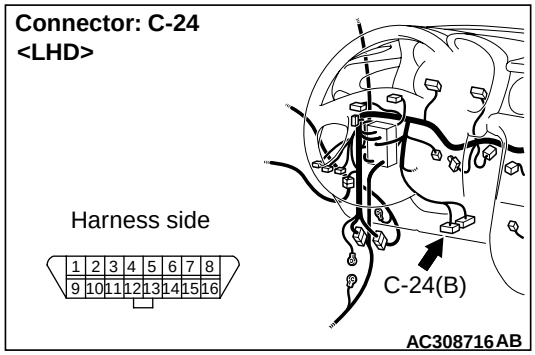

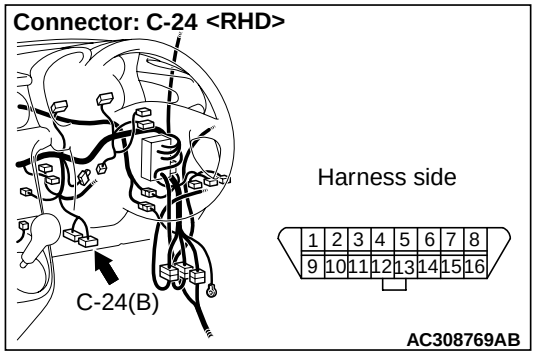

Q: Is the check result normal?
YES : Go to Step 7.
NO : Repair the defective connector.

Step 7. Check the wiring harness from C-219 ETACS-ECU connector terminal Nos. 51 and 67 to C-24 diagnosis connector terminal Nos. 9 and 1.

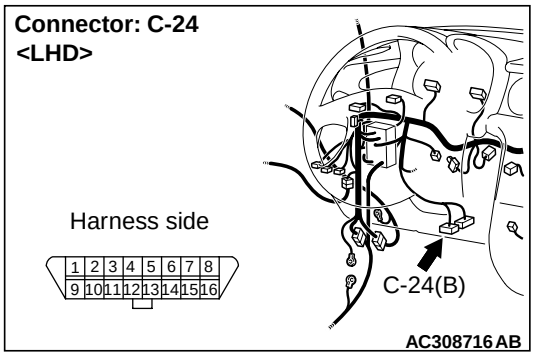

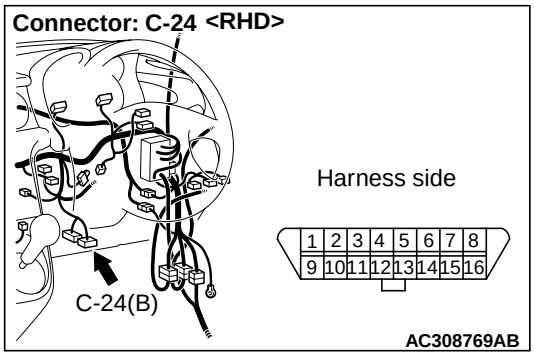

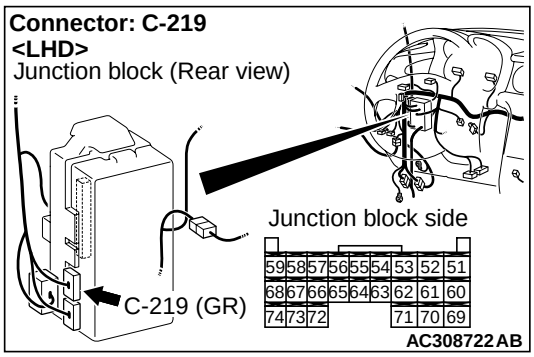

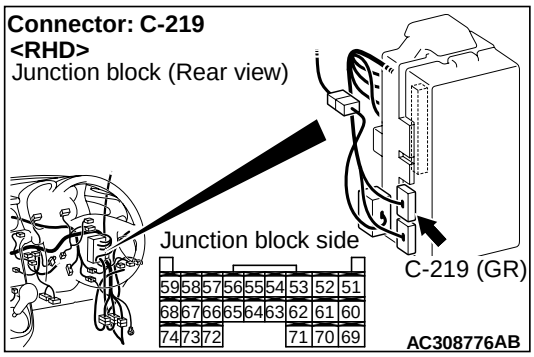

- Check the communication lines for open circuit.

Q: Is the check result normal?
YES : Go to Step 8.
NO : Repair the wiring harness.

Step 8. Retest the system.
Check whether the communication with the MUT-II/III is possible.

Q: Is the check result normal?

YES : The trouble can be an intermittent malfunction (Refer to GROUP 00 – How to Cope with Intermittent Malfunction P.00-6).
NO : Replace the ETACS-ECU.

INSPECTION PROCEDURE A-2: When the ignition switch is at the LOCK (OFF) position, the functions do not work normally. Check the battery power supply circuit to the ETACS-ECU.

⚠ CAUTION
Whenever the ECU is replaced, ensure that the power supply circuit and the earthing circuit are normal.

ETACS-ECU Power Supply Circuit <LHD>

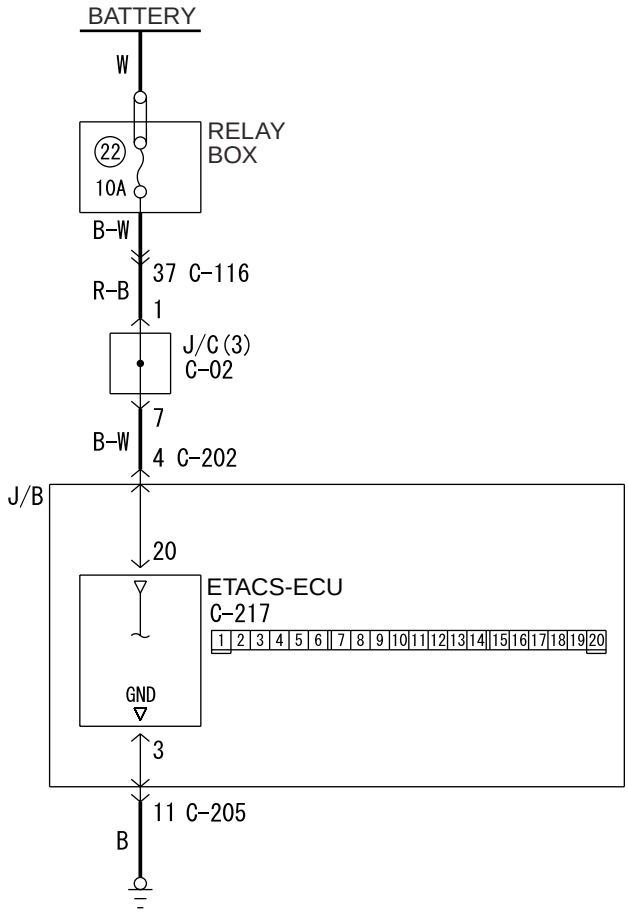

Wire colour code
B : Black LG : Light green
G : Green L : Blue
W : White Y : Yellow
SB : Sky blue BR : Brown
O : Orange GR : Gray
R : Red P : Pink V : Violet

W4Z54E60AA

ETACS-ECU Power Supply Circuit <RHD>

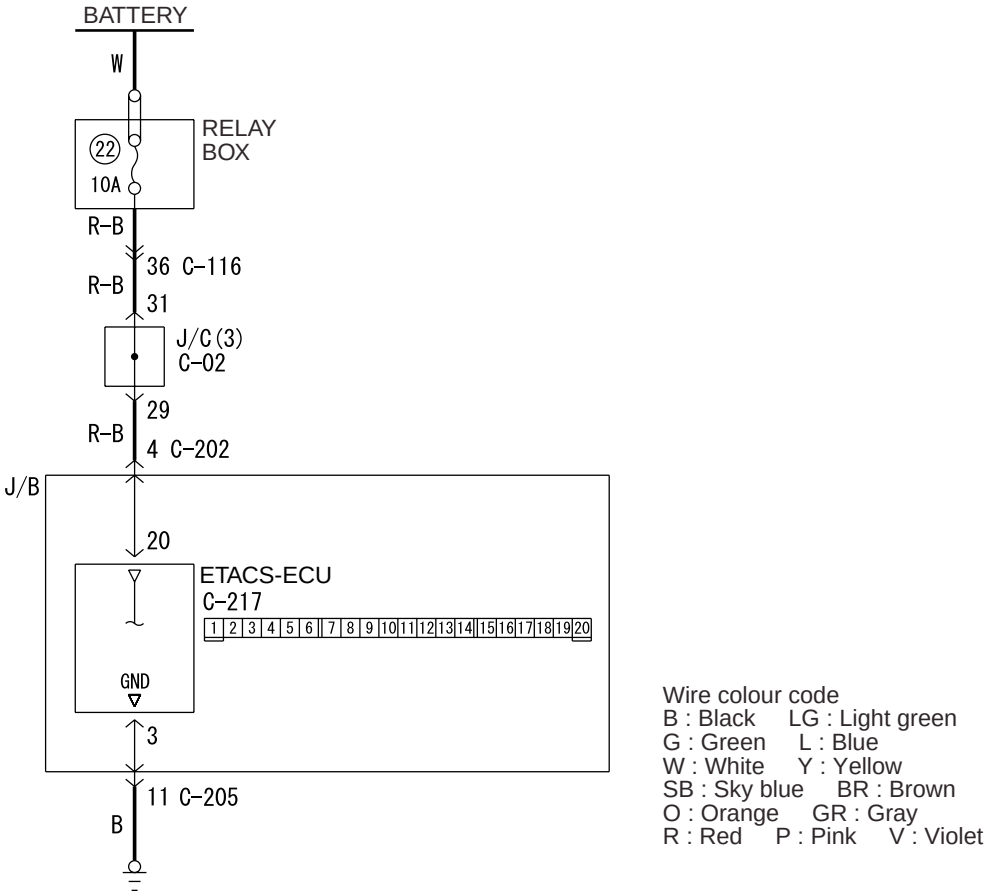

COMMENTS ON TROUBLE SYMPTOM

If this circuit is defective and the ignition switch is at the LOCK (OFF) position, the ETACS-ECU does not work. In this case, the functions below will be suspended.

- Lamp reminder function
- Keyless entry system
- Ignition key cylinder illumination lamp
- Headlamp automatic-shutdown function

However, when the ignition switch is at the ON position, the functions below will work.

- Reading diagnosis code and checking input signal by MUT-II/III.
- Central door locking
- Headlamp and tail lamp
- Hazard warning lamp
- Room lamps

POSSIBLE CAUSES

- Malfunction of the ETACS-ECU
- Damaged harness wires and connectors

DIAGNOSTIC PROCEDURE

Step 1. Connector check: C-217 ETACS-ECU connector

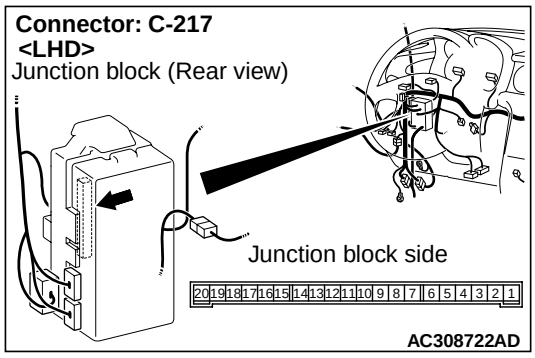

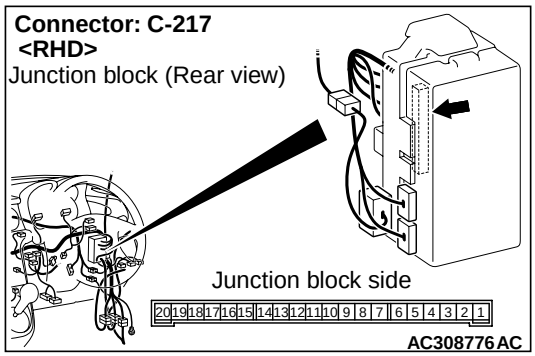

Q: Is the check result normal?
YES : Go to Step 2.
NO : Repair the defective connector.

Step 2. Measure the voltage at the C-217 ETACS-ECU connector.

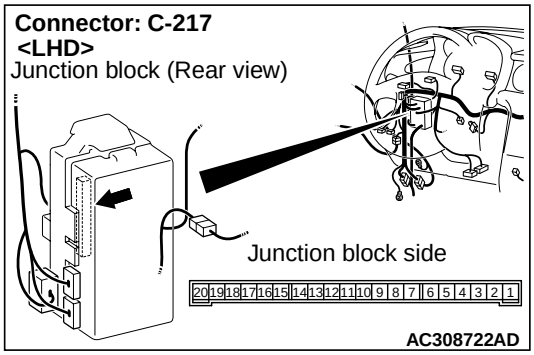

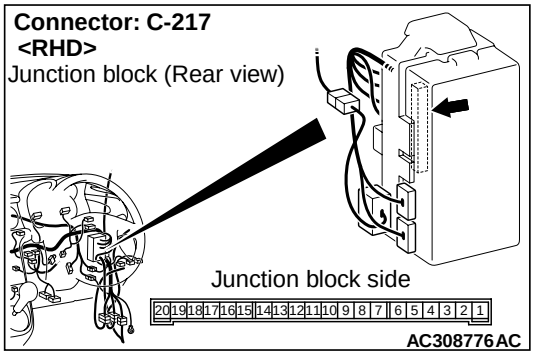

(1) Remove the ETACS-ECU, and measure at the junction block side.

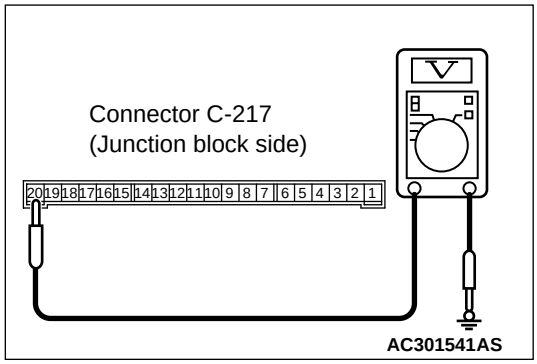

(2) Voltage between C-217 ETACS-ECU connector terminal No.20 and body earth.

OK: System voltage

Q: Is the check result normal?
YES : Go to Step 4.
NO : Go to Step 3.

Step 3. Check the wiring harness between C-217 ETACS-ECU connector terminal No.20 and battery.

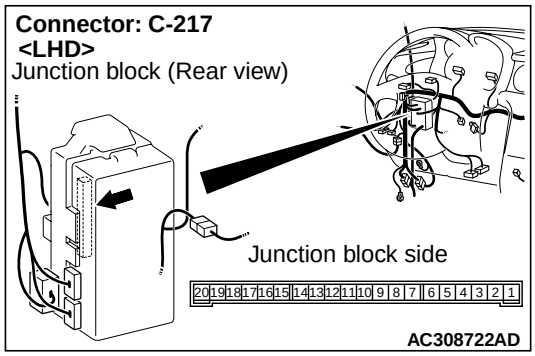

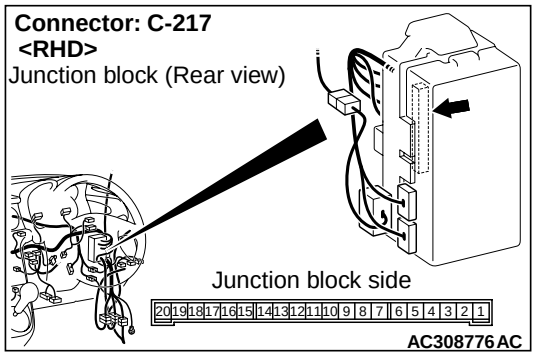

NOTE:

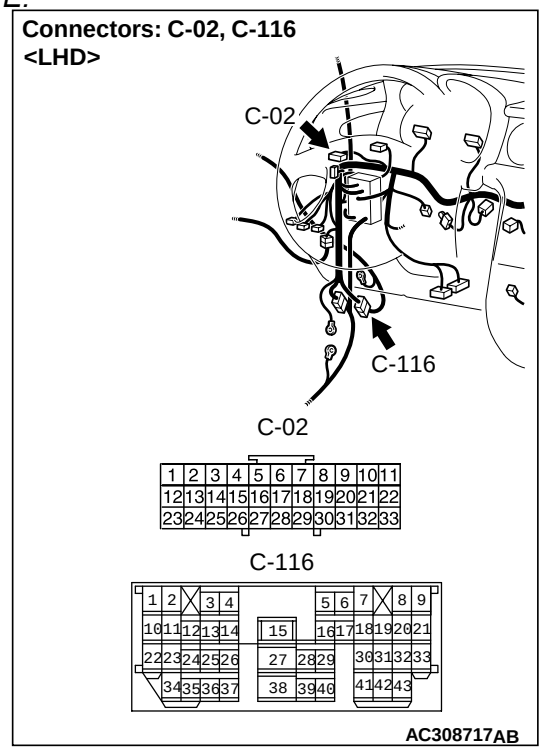

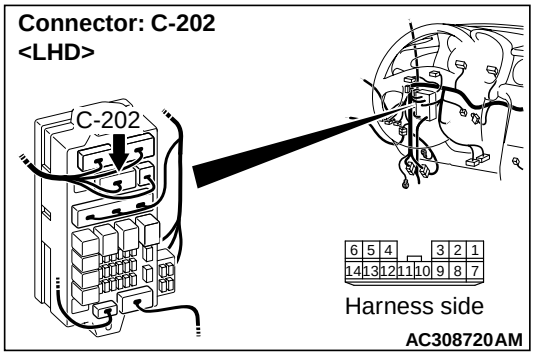

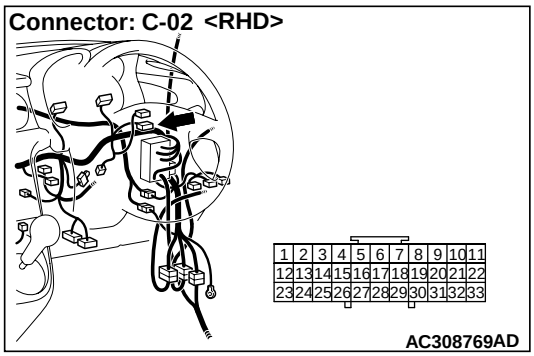

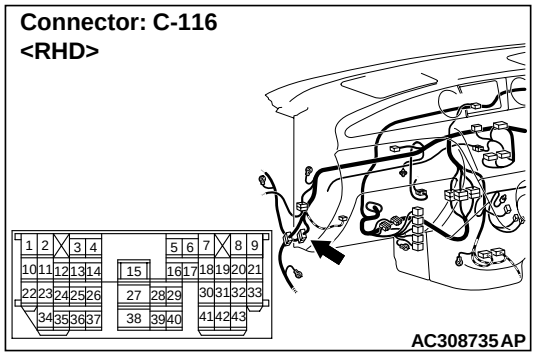

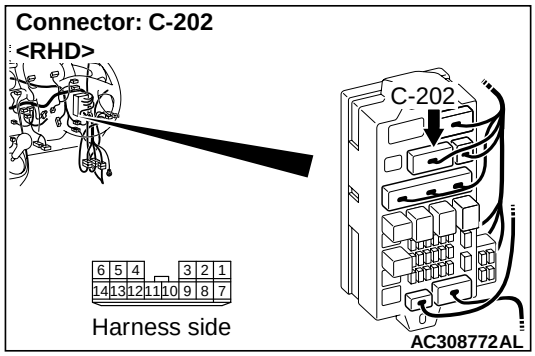

Prior to the wiring harness inspection, check intermediate connector C-116, joint connector C-02 and junction block connector C-202, and repair if necessary.

- Check the power supply line for open circuit.

Q: Is the check result normal?

YES : The trouble can be an intermittent malfunction (Refer to GROUP 00 – How to Cope with Intermittent Malfunction P.00-6).

NO : Repair the wiring harness.

Step 4. Measure the resistance at the C-217 ETACS-ECU connector.

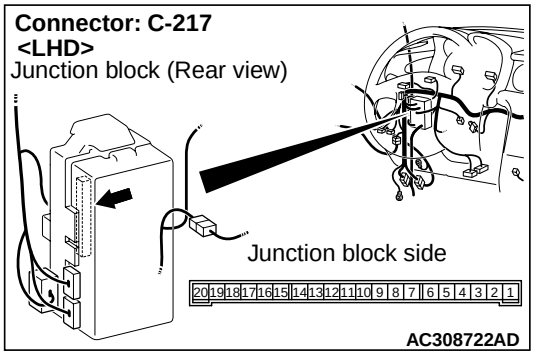

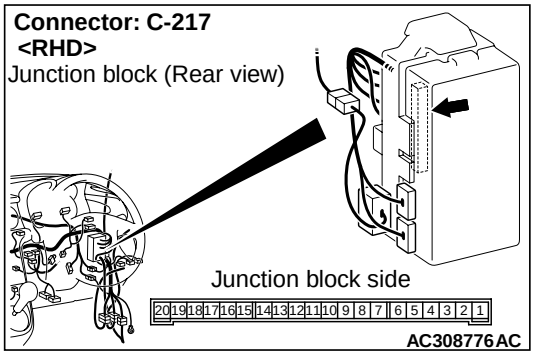

(1) Remove the ETACS-ECU, and measure at the junction block side.

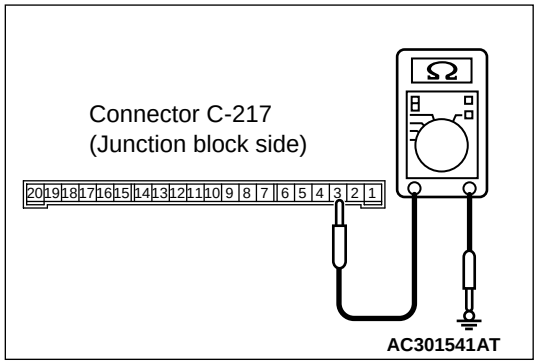

(2) Continuity between C-217 ETACS-ECU connector terminal No.3 and body earth.

OK: 2Ω or less

Q: Is the check result normal?

YES : Go to Step 6.

NO : Go to Step 5.

Step 5. Check the wiring harness between C-217 ETACS-ECU connector terminal No.3 and body earth.

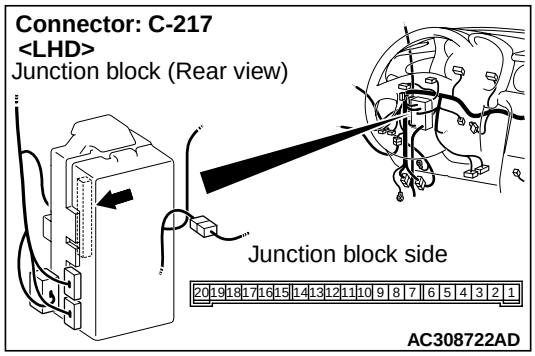

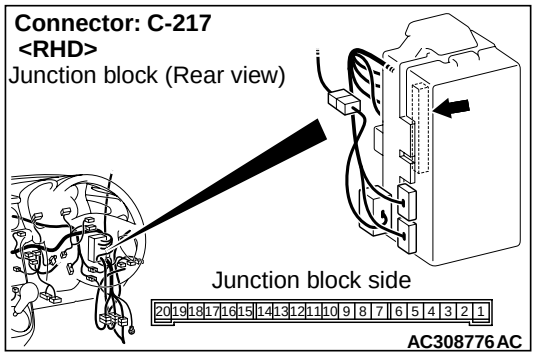

NOTE:

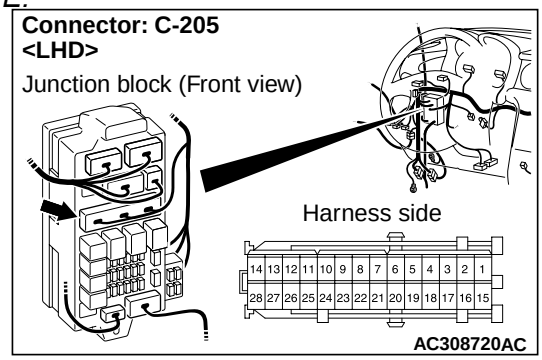

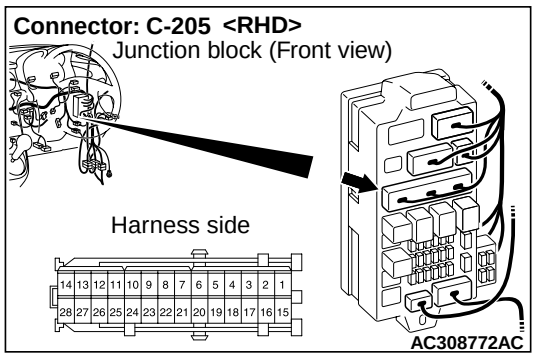

Prior to the wiring harness inspection, check junction block connector C-205, and repair if necessary.

- Check the earth wires for open circuit.

Q: Is the check result normal?

YES : The trouble can be an intermittent malfunction (Refer to GROUP 00 – How to Cope with Intermittent Malfunction P.00-6).

NO : Repair the wiring harness.

Step 6. Retest the system.

Check that the battery power supply circuit to the ETACS-ECU is normal.

Q: Is the check result normal?

YES : The trouble can be an intermittent malfunction (Refer to GROUP 00 – How to Cope with Intermittent Malfunction P.00-6).

NO : Replace the ETACS-ECU.

TONE ALARM

INSPECTION PROCEDURE B-1: Lamp reminder buzzer function does not work normally.

⚠ CAUTION
Whenever the ECU is replaced, ensure that the input and output signal circuits are normal.

Lamp Reminder Tone Alarm Function

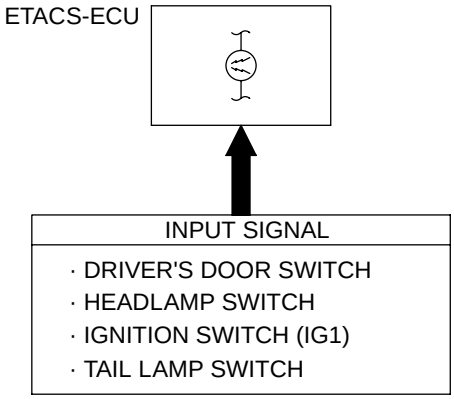

W3Z10E07AA

COMMENTS ON TROUBLE SYMPTOM

The ETACS-ECU operates this function in accordance with the input signals below.

- Ignition switch (IG1)
- Driver's door switch
- Tail lamp switch
- Headlamp switch

If this function does not work normally, these input signal circuit(s) or the ETACS-ECU may be defective.

POSSIBLE CAUSES

- Malfunction of the driver's door switch
- Malfunction of the column switch
- Malfunction of the ETACS-ECU
- Damaged harness wires and connectors

DIAGNOSTIC PROCEDURE

Step 1. Check the power supply circuit.
When the ignition switch is turned to the LOCK (OFF) position, check if the hazard warning lamps illuminate.

Q: Is the check result normal?
YES : Go to Step 2.
NO : Refer to inspection procedure A-2 "Check the ETACS-ECU battery power supply circuit P.54B-52."

Step 2. Pulse check
Check the input signals below, which are related to the lamp reminder buzzer function.

System switch	Check condition
Ignition switch (IG1)	When turned from ACC to ON
Driver's door switch	When the driver's door is opened
Tail lamp switch	When the lighting switch is turned to the TAIL position
Headlamp switch	When the lighting switch is turned to the HEADLAMP position

OK: The MUT-II/III sounds or the voltmeter needle fluctuates.

Q: Is the check result normal?

All the signals are received normally. : Go to Step 3.

The ignition switch (IG1) signal is not received. : Refer to inspection procedure N-2 "The ignition switch (IG1) signal is not received P.54B-301."

The driver's door switch signal is not received. : Refer to inspection procedure N-4 "The front door switch signal is not received P.54B-315 <L. H. drive vehicles> or P.54B-317 <R. H. drive vehicles>."

The tail lamp switch signal is not received. : Refer to inspection procedure N-5 "The column switch (lighting and turn-signal lamp switch) signal is not received P.54B-319."

The headlamp switch signal is not received. : Refer to inspection procedure N-5 "The column switch (lighting and turn-signal lamp switch) signal is not received P.54B-319."

Step 3. Retest the system.
The lamp reminder buzzer function should work normally.

Q: Is the check result normal?

YES : The trouble can be an intermittent malfunction (Refer to GROUP 00 – How to Cope with Intermittent Malfunction P.00-6).

NO : Replace the ETACS-ECU.

CENTRAL DOOR LOCKING SYSTEM

INSPECTION PROCEDURE C-1: Central Door Locking System does not Work. <L.H. drive vehicles>

⚠ CAUTION

Whenever the ECU is replaced, ensure that the input and output signal circuits are normal.

Central Door Lock Power Supply Circuit <LHD>

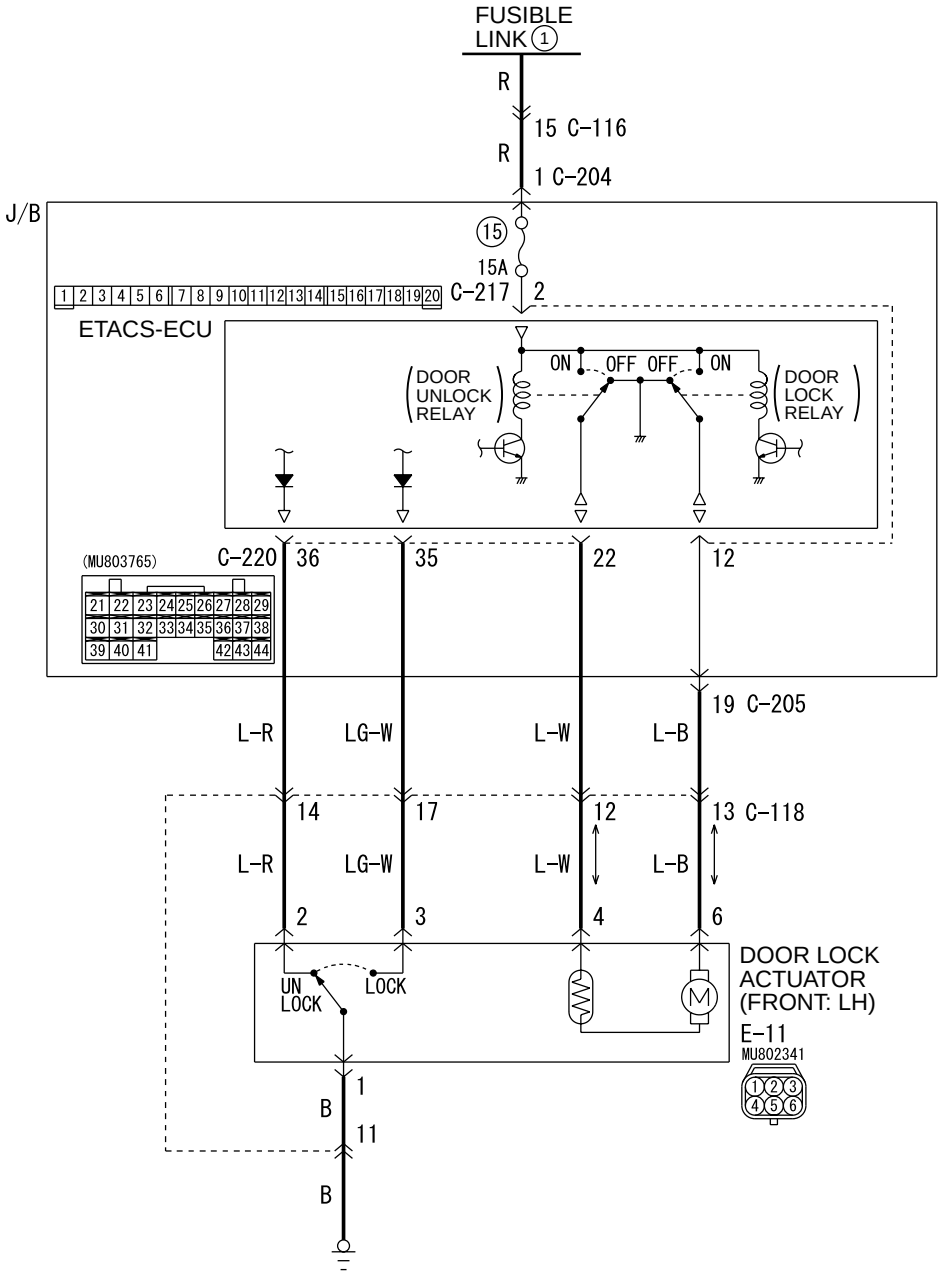

Wire colour code
B : Black LG : Light green G : Green L : Blue W : White Y : Yellow SB : Sky blue
BR : Brown O : Orange GR : Gray R : Red P : Pink V : Violet

W4Z54E06AA

COMMENT ON TROUBLE SYMPTOM

If the central door locking system does not work at all, the door lock actuator (front: LH) or the ETACS-ECU may be defective.

POSSIBLE CAUSES

- Malfunction of the door lock actuator (front: LH)
- Malfunction of the ETACS-ECU
- Damaged harness wires and connectors

DIAGNOSIS PROCEDURE

Step 1. Check the power supply circuit.

When the ignition switch is turned to the LOCK (OFF) position, check if the hazard warning lamps illuminate.

Q: Is the check result normal?
YES : Go to Step 2.
NO : Refer to inspection procedure A-2 "Check the ETACS-ECU battery power supply circuit" P.54B-52.

Step 2. Pulse check

Check the input signal from the driver's door lock actuator switch.

System switch	Check condition
Driver's door lock actuator switch	When the driver's key cylinder or inside lock knob is unlocked or locked

OK: The MUT-II/III sound or the voltmeter needle fluctuate.

Q: Is the check result normal?
YES : Go to Step 3.
NO : Refer to inspection procedure N-12 "The driver's door lock actuator signal is not received <L.H. drive vehicles>P.54B-350."

Step 3. Connector check: E-11 door lock actuator (front: LH) connector

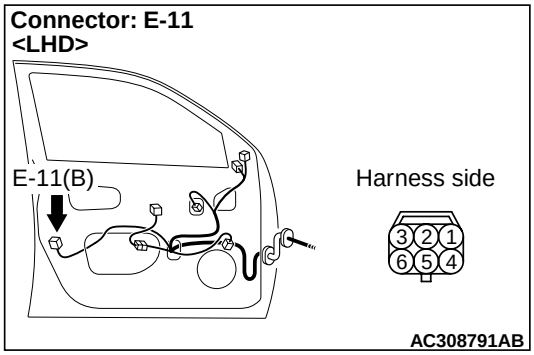

Q: Is the check result normal?
YES : Go to Step 4.
NO : Repair the defective connector.

Step 4. Check the door lock actuator (front: LH)

Check that the door lock actuator (front: LH) works normally. Refer to GROUP 42 – Door P.42-35.

Q: Is the check result normal?
YES : Go to Step 5.
NO : Replace the door lock actuator (front: LH).

Step 5. Connector check: C-217 ETACS-ECU connector

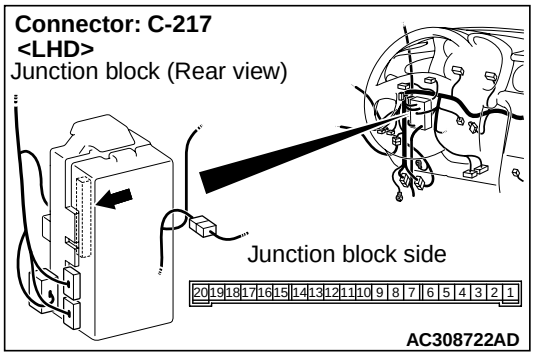

Q: Is the check result normal?
YES : Go to Step 6.
NO : Repair the defective connector.

Step 6. Check the wiring harness between C-217 ETACS-ECU connector terminal No. 2 and fusible link (1).

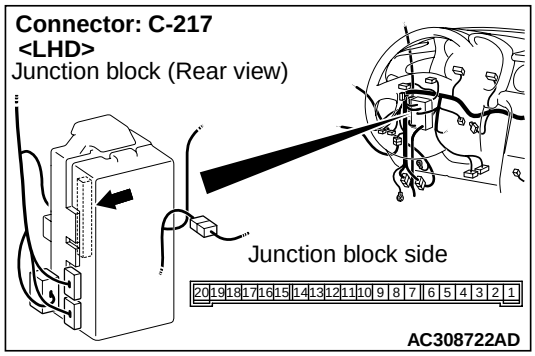

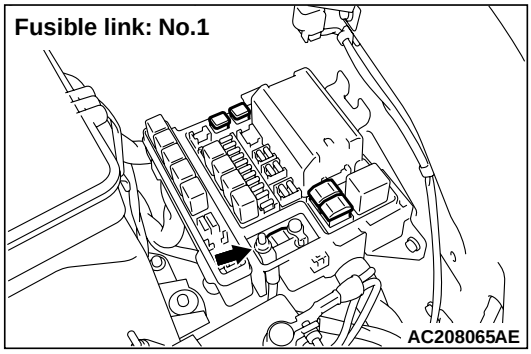

NOTE:

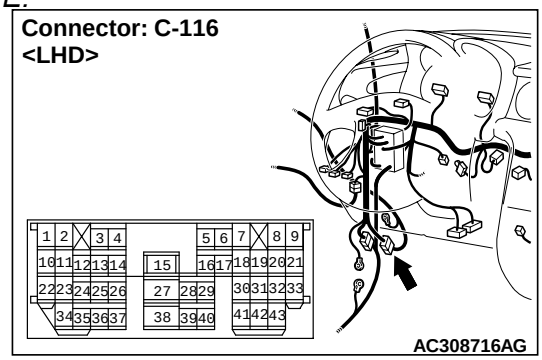

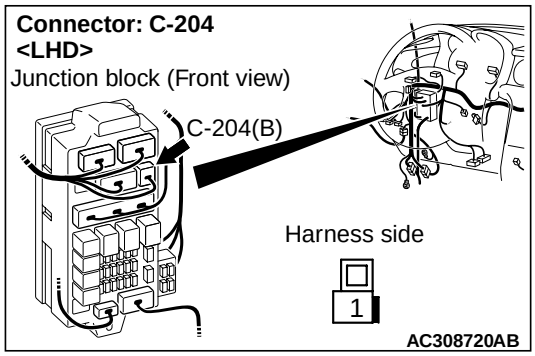

Prior to the wiring harness inspection, check intermediate connector C-116 and junction block connector C-204, and repair if necessary.

- Check the power supply line for open or short circuit.

Q: Is the check result normal?

YES : Go to Step 7.
NO : Repair the wiring harness.

Step 7. Retest the system.

Check that the central door locking system works normally.

Q: Is the check result normal?

YES : The trouble can be an intermittent malfunction (Refer to GROUP 00 – How to Cope with Intermittent Malfunction P.00-6).
NO : Replace the ETACS-ECU.

INSPECTION PROCEDURE C-1: Central Door Locking System does not Work. <R.H. drive vehicles>

⚠ CAUTION

Whenever the ECU is replaced, ensure that the input and output signal circuits are normal.

Central Door Lock Power Supply Circuit <RHD>

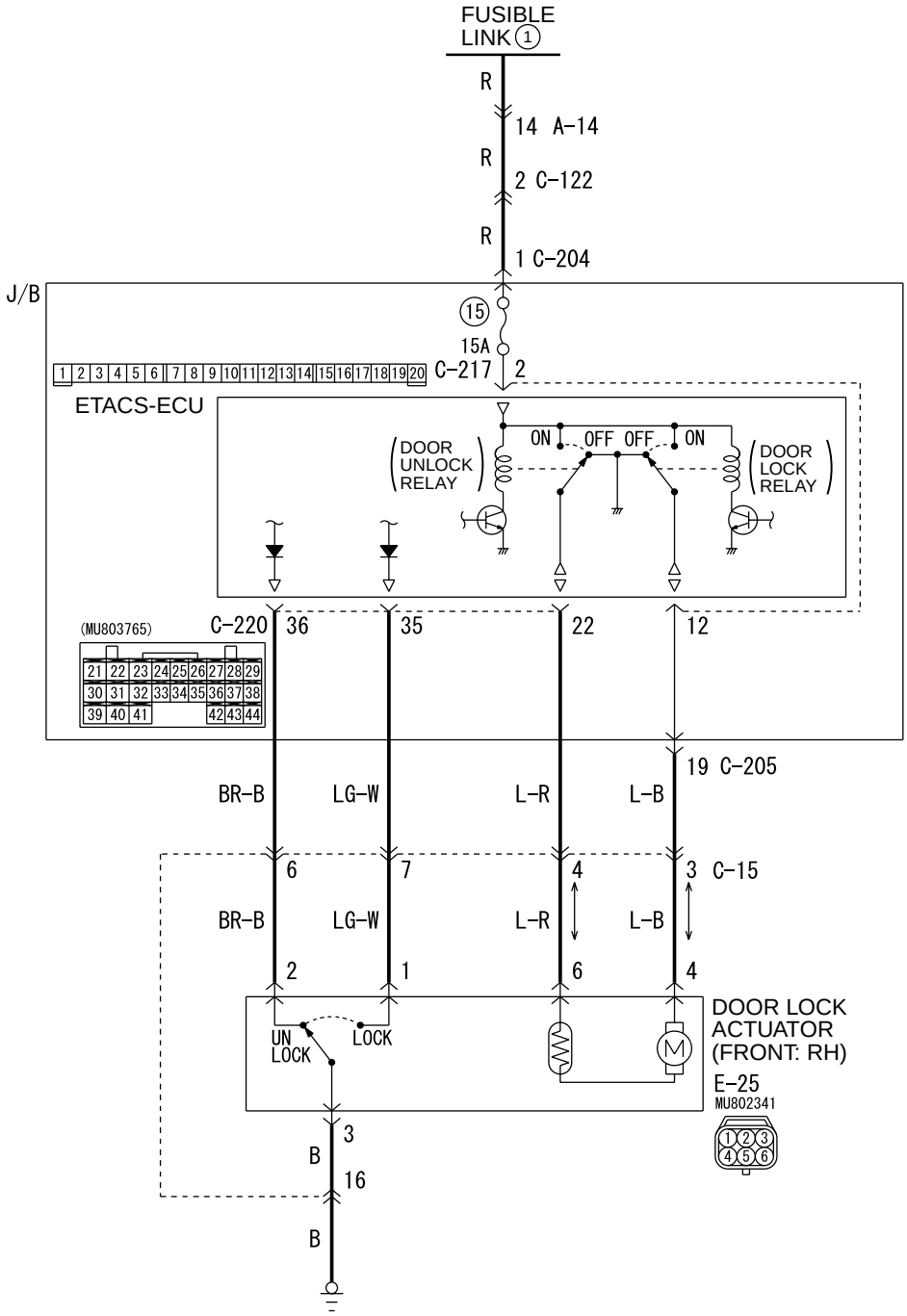

Wire colour code
B : Black LG : Light green G : Green L : Blue W : White Y : Yellow SB : Sky blue
BR : Brown O : Orange GR : Gray R : Red P : Pink V : Violet

W4Z54E07AA

COMMENT ON TROUBLE SYMPTOM

If the central door locking system does not work at all, the door lock actuator (front: RH) or the ETACS-ECU may be defective.

POSSIBLE CAUSES

- Malfunction of the door lock actuator (front: RH)
- Malfunction of the ETACS-ECU
- Damaged harness wires and connectors

DIAGNOSIS PROCEDURE

Step 1. Check the power supply circuit.

When the ignition switch is turned to the LOCK (OFF) position, check if the hazard warning lamps illuminate.

Q: Is the check result normal?
YES : Go to Step 2.
NO : Refer to inspection procedure A-2 "Check the ETACS-ECU battery power supply circuit" P.54B-52.

Step 2. Pulse check

Check the input signal from the driver's door lock actuator switch.

System switch	Check condition
Driver's door lock actuator switch	When the driver's key cylinder or inside lock knob is unlocked or locked

OK: The MUT-II/III sound or the voltmeter needle fluctuate.

Q: Is the check result normal?
YES : Go to Step 3.
NO : Refer to inspection procedure N-12 "The driver's door lock actuator signal is not received <R.H. drive vehicles>P.54B-354 ."

Step 3. Connector check: E-25 door lock actuator (front: RH) connector

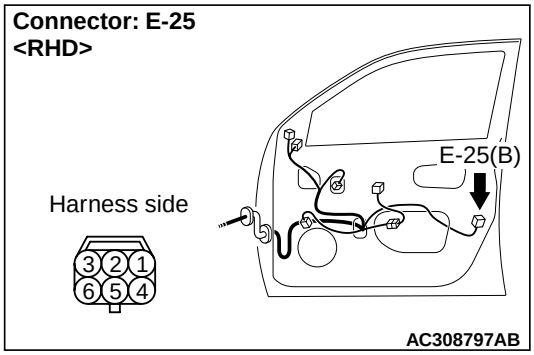

Q: Is the check result normal?
YES : Go to Step 4.
NO : Repair the defective connector.

Step 4. Check the door lock actuator (front: RH)

Check that the door lock actuator (front: RH) works normally. Refer to GROUP 42 – Door P.42-35.

Q: Is the check result normal?
YES : Go to Step 5.
NO : Replace the door lock actuator (front: RH).

Step 5. Connector check: C-217 ETACS-ECU connector

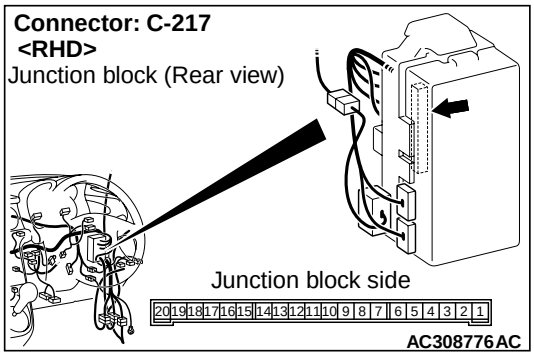

Q: Is the check result normal?
YES : Go to Step 6.
NO : Repair the defective connector.

Step 6. Check the wiring harness between C-217 ETACS-ECU connector terminal No. 2 and fusible link (1).

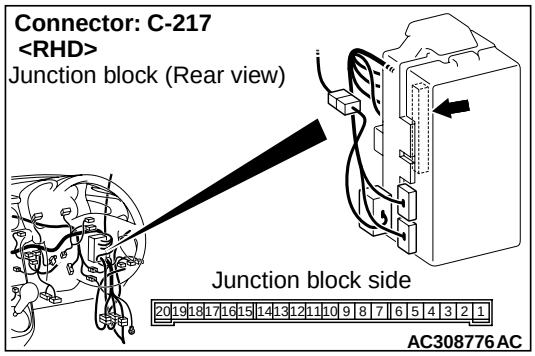

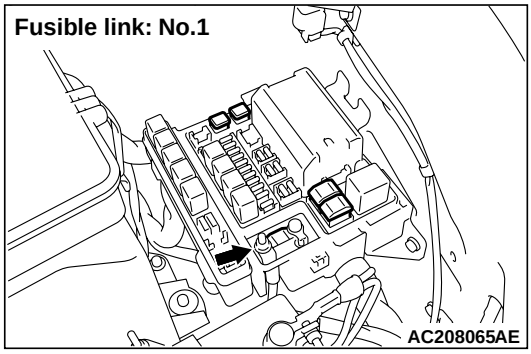

NOTE:

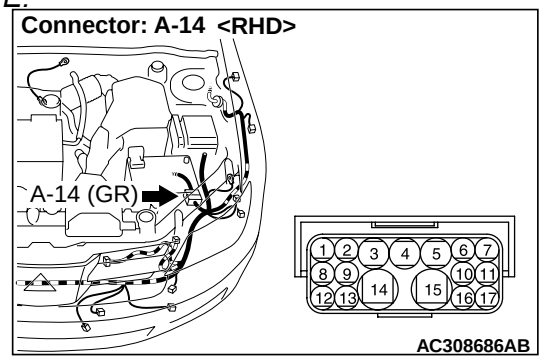

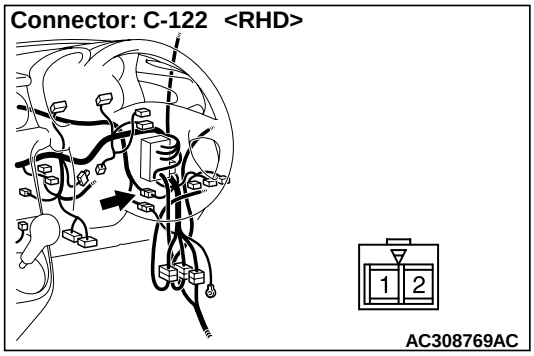

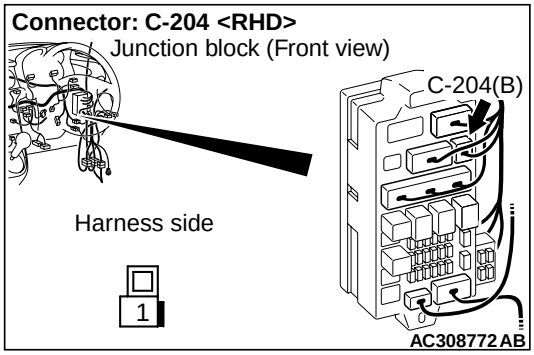

Prior to the wiring harness inspection, check intermediate connectors A-14, C-122 and junction block connector C-204, and repair if necessary.

- Check the power supply line for open or short circuit.

Q: Is the check result normal?
YES : Go to Step 7.
NO : Repair the wiring harness.

Step 7. Retest the system.
Check that the central door locking system works normally.

Q: Is the check result normal?
YES : The trouble can be an intermittent malfunction (Refer to GROUP 00 – How to Cope with Intermittent Malfunction P.00-6).
NO : Replace the ETACS-ECU.

INSPECTION PROCEDURE C-2: A Door or a Tailgate can not be Locked or Unlocked by the Central Door Locking System. <L.H. drive vehicles>

Central Door Lock Circuit <LHD>

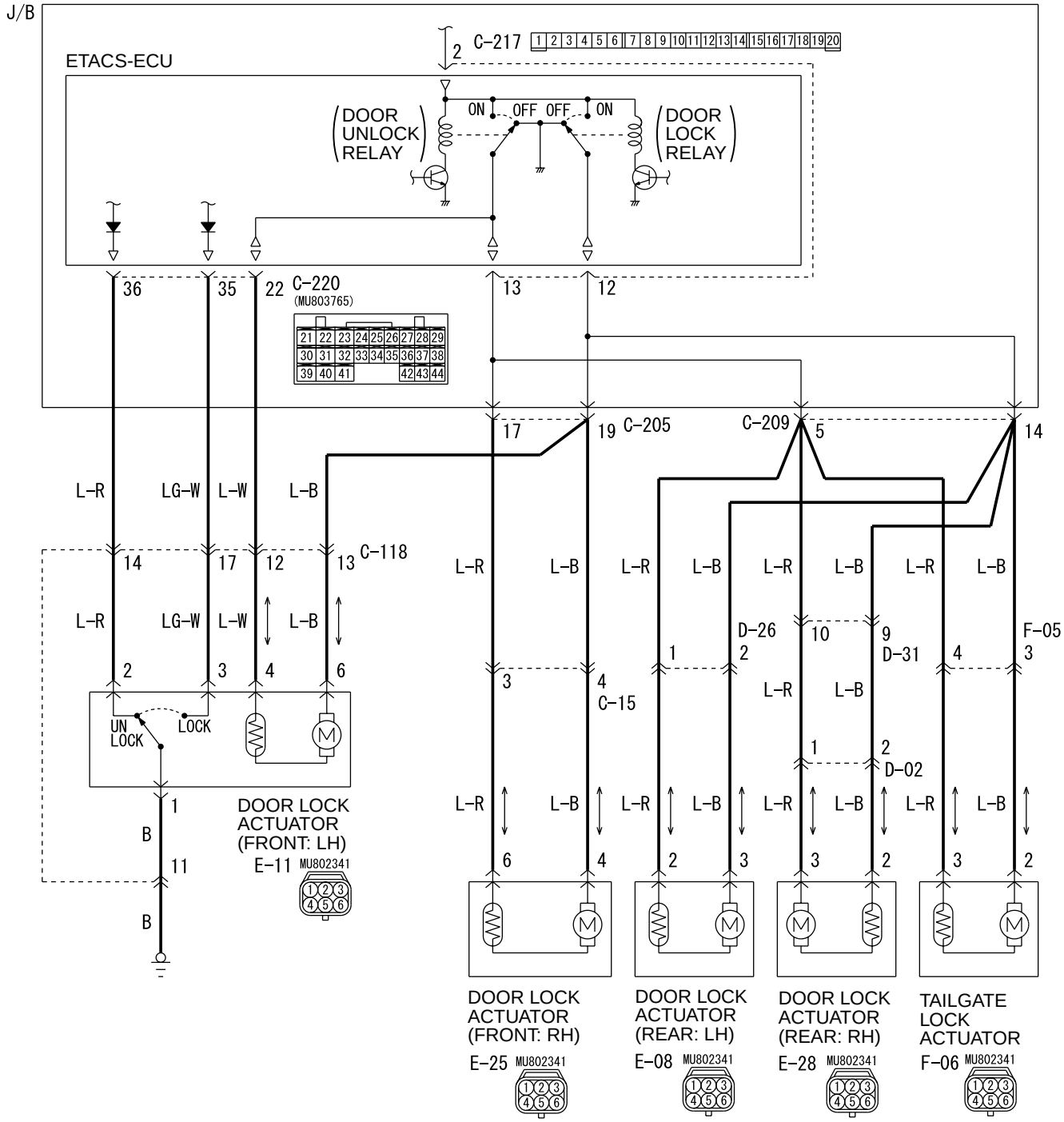

Wire colour code
B : Black LG : Light green G : Green L : Blue W : White Y : Yellow SB : Sky blue
BR : Brown O : Orange GR : Gray R : Red P : Pink V : Violet

W4Z54E08AA

COMMENT ON TROUBLE SYMPTOM

If a door or the tailgate can not be locked or unlocked by the central door locking system, the door lock actuator or the tailgate lock actuator may be defective.

POSSIBLE CAUSES

- Malfunction of the door lock actuator
- Malfunction of the tailgate lock actuator
- Damaged harness wires and connectors

DIAGNOSIS PROCEDURE

Step 1. Confirm which door lock actuator is defective.

Q: Which door fails to lock correctly?
Driver's door : Go to Step 2.
Front passenger's door : Go to Step 6.
Rear right door : Go to Step 10.
Rear left door : Go to Step 14.
Tailgate : Go to Step 18.

Step 2. Connector check: E-11 door lock actuator (front: LH) connector

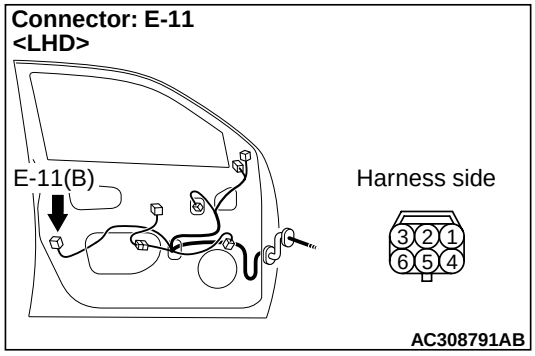

Q: Is the check result normal?
YES : Go to Step 3.
NO : Repair the defective connector.

Step 3. Check the door lock actuator (front: LH)

Check that the door lock actuator (front: LH) works normally. Refer to GROUP 42 – Door P.42-35.

Q: Is the check result normal?
YES : Go to Step 4.
NO : Replace the door lock actuator (front: LH).

Step 4. Connector check: C-217, C-220 ETACS-ECU connector

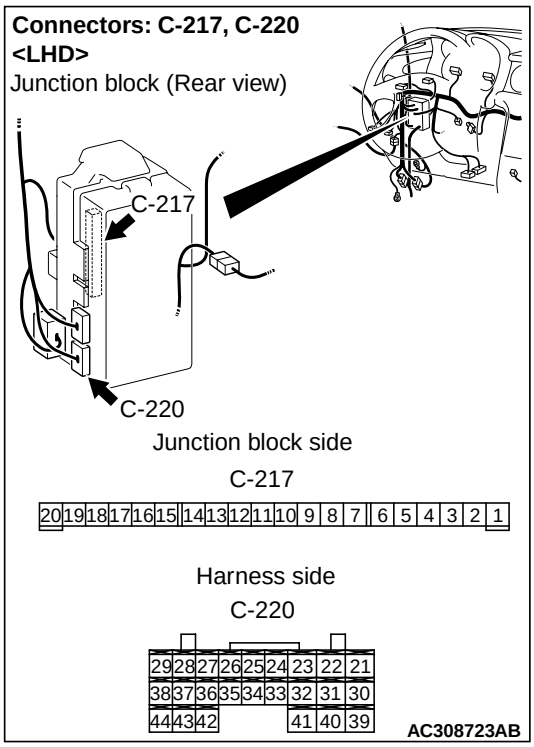

Q: Is the check result normal?
YES : Go to Step 5.
NO : Repair the defective connector.

Step 5. Check the wiring harness from C-217 ETACS-ECU connector terminal No. 12 and C-220 ETACS-ECU connector No. 22 to E-11 door lock actuator (front: LH) connector terminal Nos. 6 and 4.

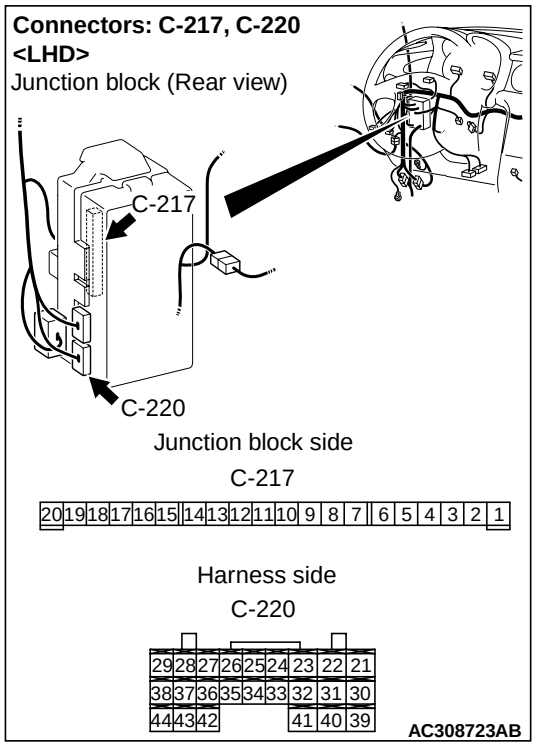

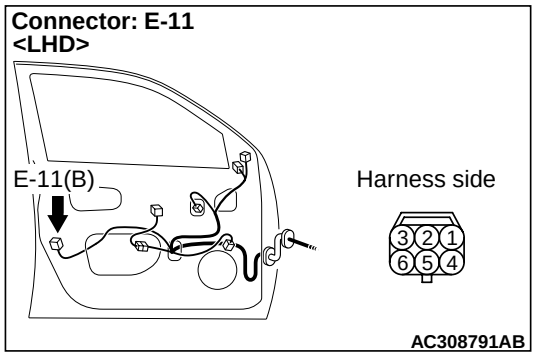

NOTE:

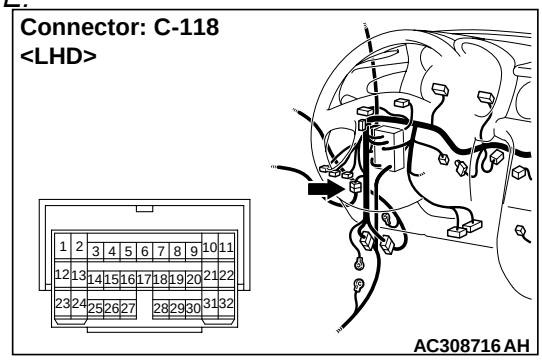

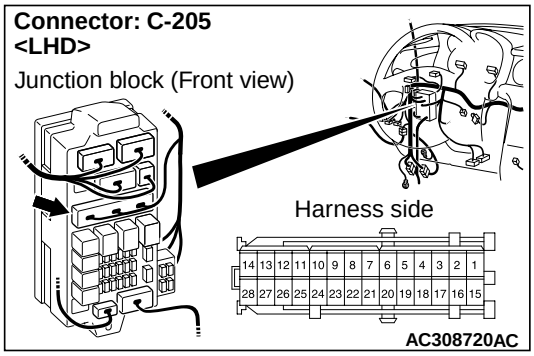

Prior to the wiring harness inspection, check intermediate connector C-118 and junction block connector C-205, and repair if necessary.

- Check the input and output lines for open circuit.

Q: Is the check result normal?

YES : The trouble can be an intermittent malfunction (Refer to GROUP 00 – How to Cope with Intermittent Malfunction P.00-6).

NO : Repair the wiring harness.

Step 6. Connector check: E-25 door lock actuator (front: RH) connector

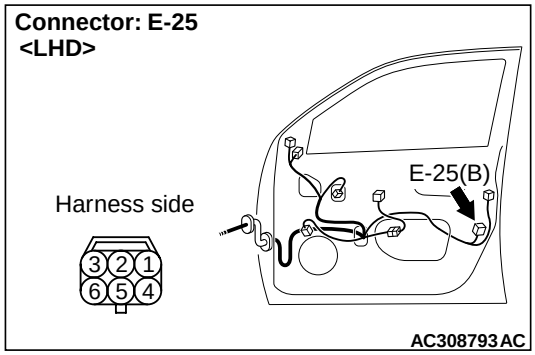

Q: Is the check result normal?
YES : Go to Step 7.
NO : Repair the defective connector.

Step 7. Check the door lock actuator (front: RH).
Check that the door lock actuator (front: RH) works normally. Refer to GROUP 42 – Door P.42-35.

Q: Is the check result normal?
YES : Go to Step 8.
NO : Replace the door lock actuator (front: RH).

Step 8. Connector check: C-217 ETACS-ECU connector

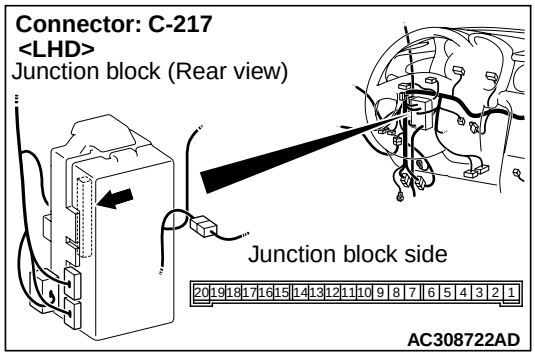

Q: Is the check result normal?
YES : Go to Step 9.
NO : Repair the defective connector.

Step 9. Check the wiring harness from C-217 ETACS-ECU connector terminal Nos. 12 and 13 to E-25 door lock actuator (front: RH) connector terminal Nos. 4 and 6.

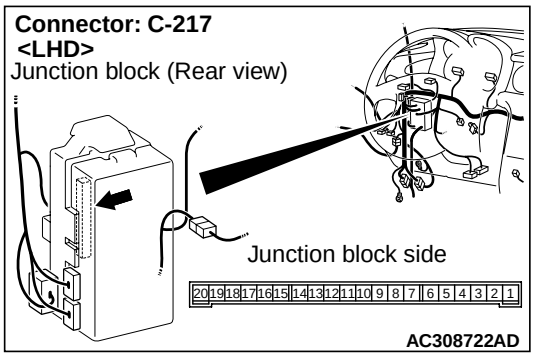

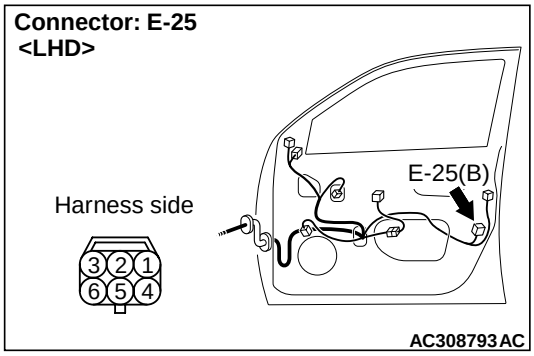

NOTE:

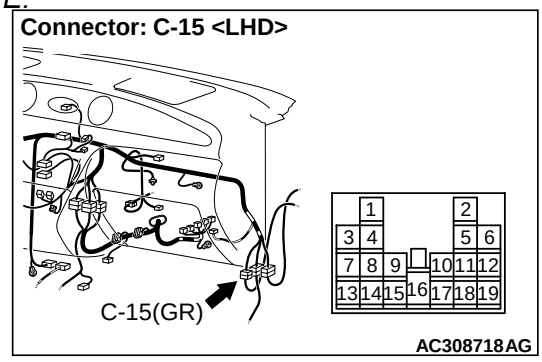

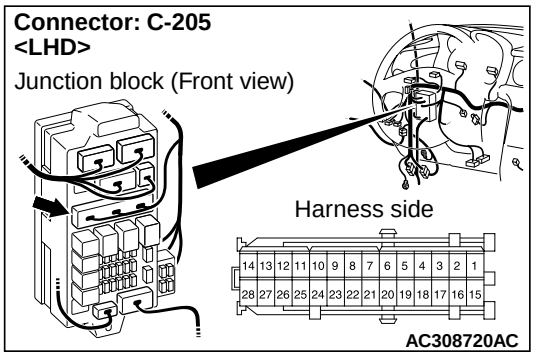

Prior to the wiring harness inspection, check intermediate connector C-15 and junction block connector C-205, and repair if necessary.

- Check the input and output lines for open circuit.

Q: Is the check result normal?
YES : The trouble can be an intermittent malfunction (Refer to GROUP 00 – How to Cope with Intermittent Malfunction P.00-6).
NO : Repair the wiring harness.

Step 10. Connector check: E-28 door lock actuator (rear: RH) connector

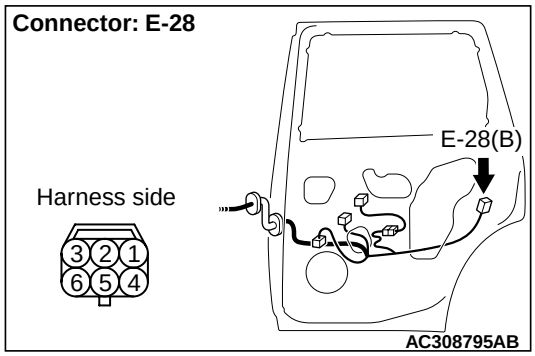

Q: Is the check result normal?
YES : Go to Step 11.
NO : Repair the defective connector.

Step 11. Check the door lock actuator (rear: RH).

Check that the door lock actuator (rear: RH) is in good condition. Refer to GROUP 42 – Door P.42-35.

Q: Is the check result normal?
YES : Go to Step 12.
NO : Replace the door lock actuator (rear: RH).

Step 12. Connector check: C-217 ETACS-ECU connector

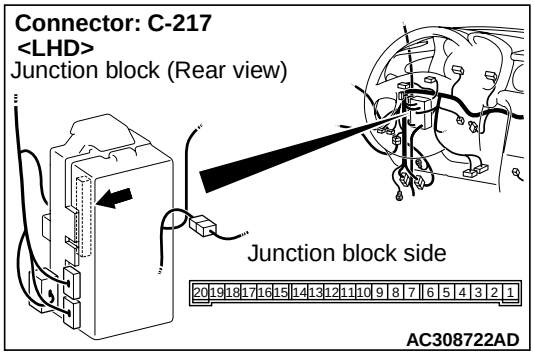

Q: Is the check result normal?
YES : Go to Step 13.
NO : Repair the defective connector.

Step 13. Check the wiring harness from C-217 ETACS-ECU connector terminal Nos. 12 and 13 to E-28 door lock actuator (rear: RH) connector terminal Nos. 2 and 3.

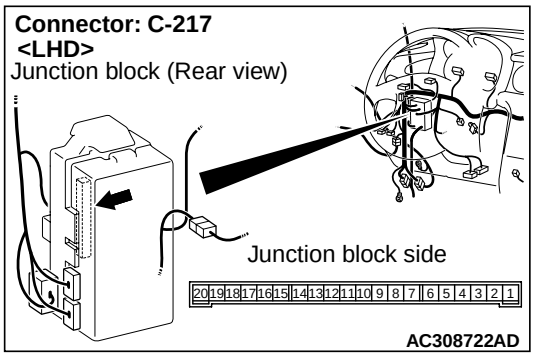

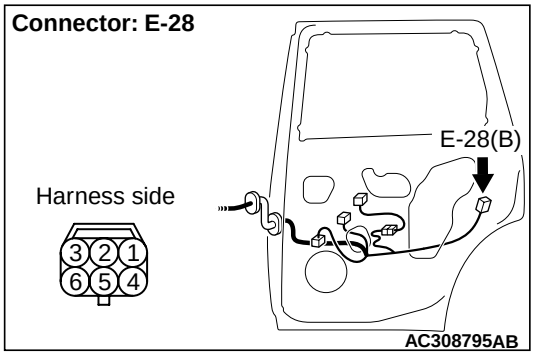

NOTE:

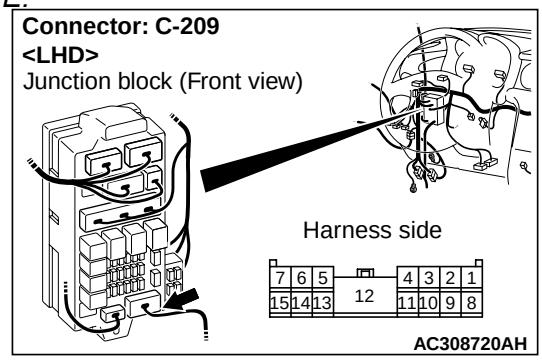

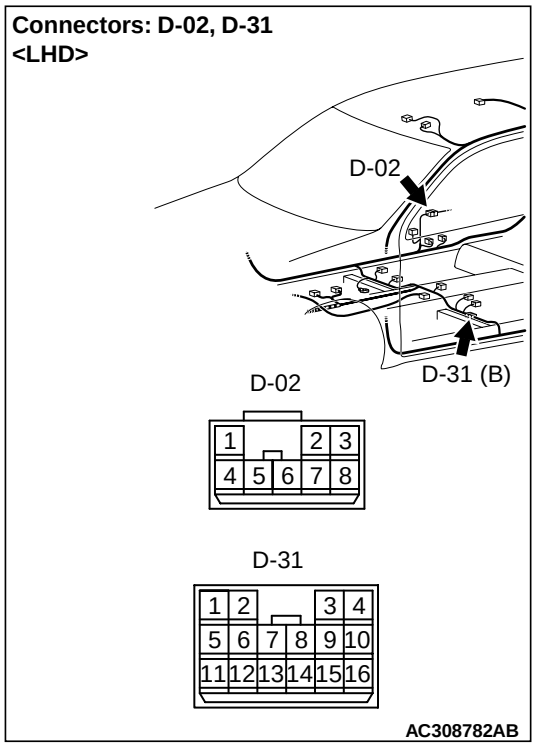

Prior to the wiring harness inspection, check D-02, D-31 intermediate connectors and C-209 junction block connector, and repair if necessary.

- Check the input and output lines for open circuit.

Q: Is the check result normal?
YES : The trouble can be an intermittent malfunction (Refer to GROUP 00 – How to Cope with Intermittent Malfunction P.00-6).
NO : Repair the wiring harness.

Step 14. Connector check: E-08 door lock actuator (rear: LH) connector

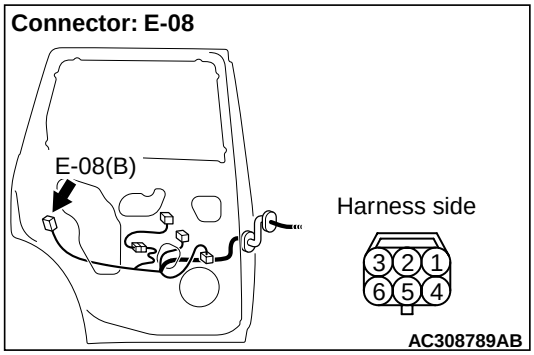

Q: Is the check result normal?
YES : Go to Step 15.
NO : Repair the defective connector.

Step 15. Check the door lock actuator (rear: LH).

Check that the door lock actuator (rear: LH) is in good condition. Refer to GROUP 42 – Door P.42-35.

Q: Is the check result normal?
YES : Go to Step 16.
NO : Replace the door lock actuator (rear: LH).

Step 16. Connector check: C-217 ETACS-ECU connector

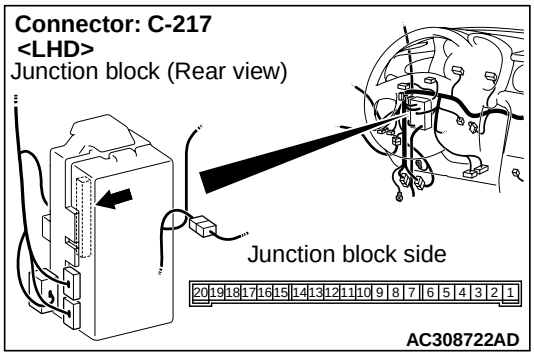

Q: Is the check result normal?
YES : Go to Step 17.
NO : Repair the defective connector.

Step 17. Check the wiring harness from C-217 ETACS-ECU connector terminal Nos. 12 and 13 to E-08 door lock actuator (rear: LH) connector terminal Nos. 3 and 2.

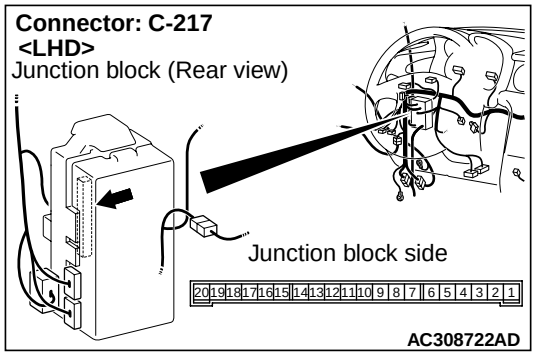

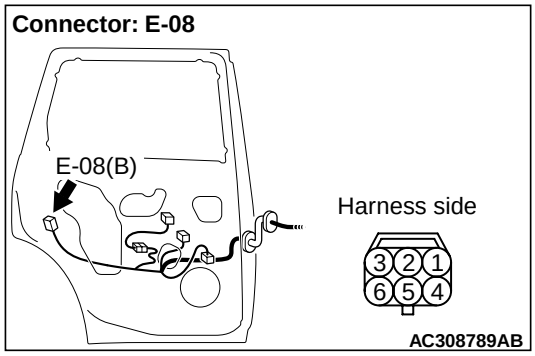

NOTE:

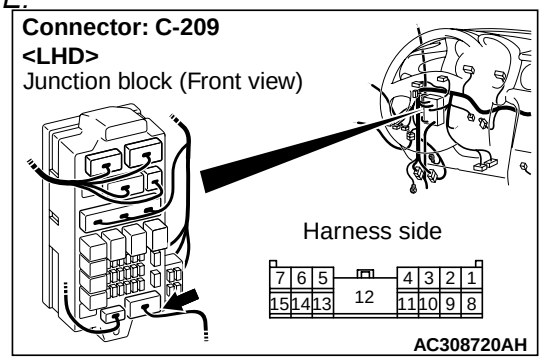

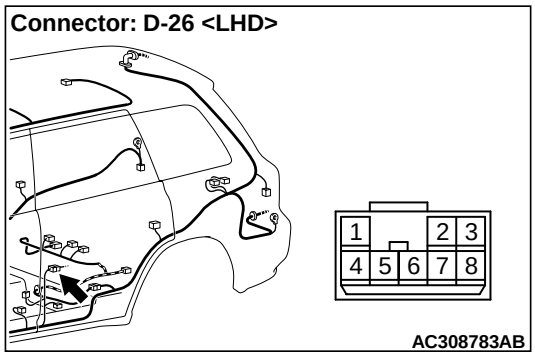

Prior to the wiring harness inspection, check D-26 intermediate connectors and C-209 junction block connector, and repair if necessary.

- Check the input and output lines for open circuit.

Q: Is the check result normal?
YES : The trouble can be an intermittent malfunction (Refer to GROUP 00 – How to Cope with Intermittent Malfunction P.00-6).
NO : Repair the wiring harness.

Step 18. Connector check: F-06 tailgate lock actuator connector

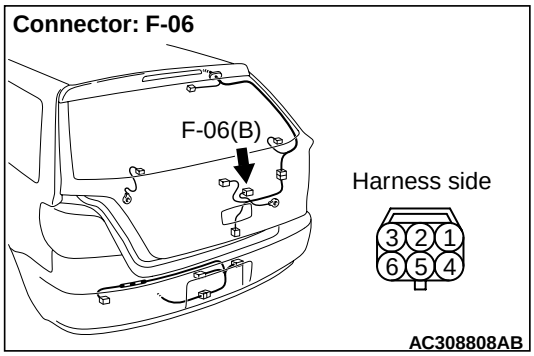

Q: Is the check result normal?
YES : Go to Step 19.
NO : Repair the defective connector.

Step 19. Check the tailgate lock actuator.
Check that the tailgate lock actuator is in good condition. Refer to GROUP 42 – Tailgate P.42-48.

Q: Is the check result normal?
YES : Go to Step 20.
NO : Replace the tailgate lock actuator.

Step 20. Connector check: C-217 ETACS-ECU connector

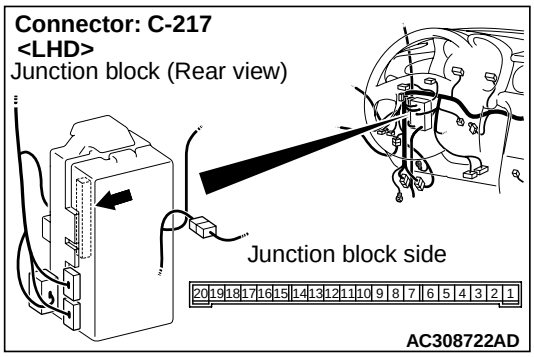

Q: Is the check result normal?
YES : Go to Step 21.
NO : Repair the defective connector.

Step 21. Check the wiring harness from C-217 ETACS-ECU connector terminal Nos. 12 and 13 to F-06 tailgate lock actuator connector terminal Nos. 2 and 3.

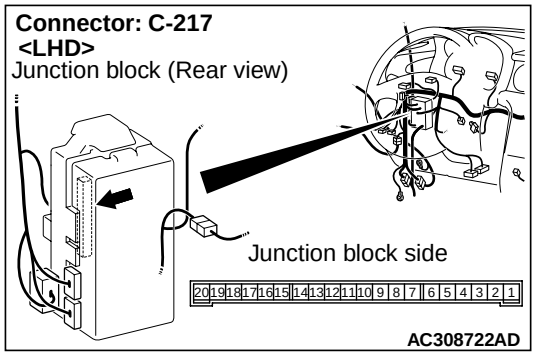

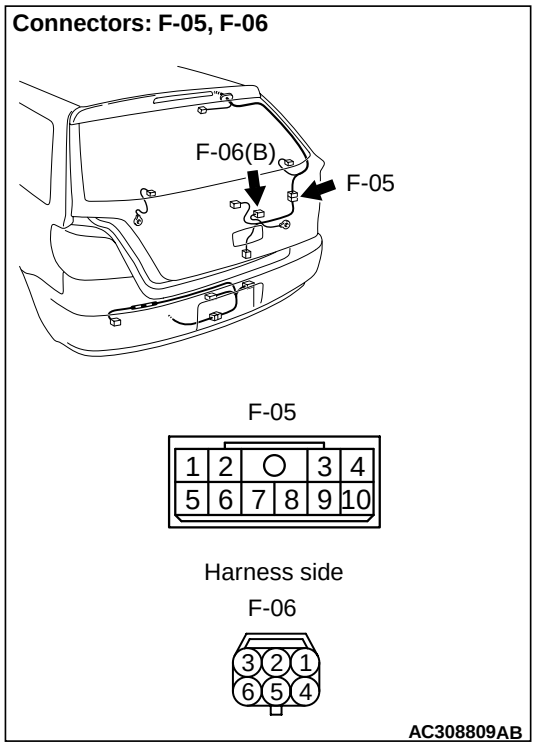

NOTE:

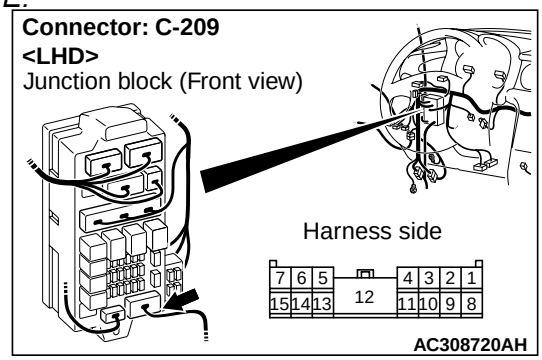

Prior to the wiring harness inspection, check intermediate connector F-05 and junction block connector C-209, and repair if necessary.

- Check the input and output lines for open circuit.

Q: Is the check result normal?

YES : The trouble can be an intermittent malfunction (Refer to GROUP 00 – How to Cope with Intermittent Malfunction P.00-6).

NO : Repair the wiring harness.

INSPECTION PROCEDURE C-2: A Door or a Tailgate can not be Locked or Unlocked by the Central Door Locking System. <R.H. drive vehicles>

Central Door Lock Circuit <RHD>

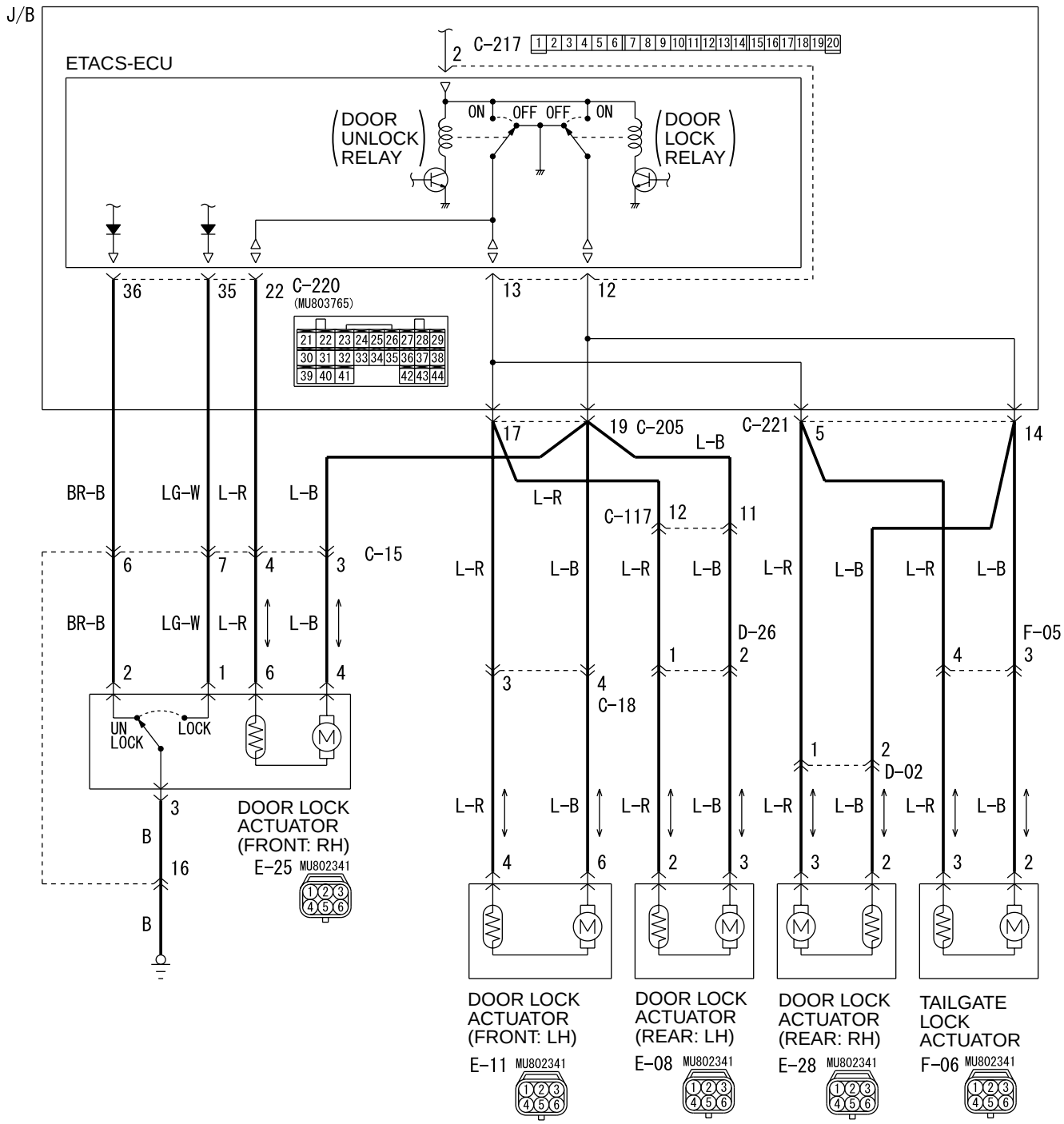

Wire colour code
B : Black LG : Light green G : Green L : Blue W : White Y : Yellow SB : Sky blue
BR : Brown O : Orange GR : Gray R : Red P : Pink V : Violet

W4Z54E09AA

COMMENT ON TROUBLE SYMPTOM

If a door or the tailgate can not be locked or unlocked by the central door locking system, the door lock actuator or the tailgate lock actuator may be defective.

POSSIBLE CAUSES

- Malfunction of the door lock actuator
- Malfunction of the tailgate lock actuator
- Damaged harness wires and connectors

DIAGNOSIS PROCEDURE

Step 1. Confirm which door lock actuator is defective.

Q: Which door fails to lock correctly?
Driver's door : Go to Step 2.
Front passenger's door : Go to Step 6.
Rear right door : Go to Step 10.
Rear left door : Go to Step 14.
Tailgate : Go to Step 18.

Step 2. Connector check: E-25 door lock actuator (front: RH) connector

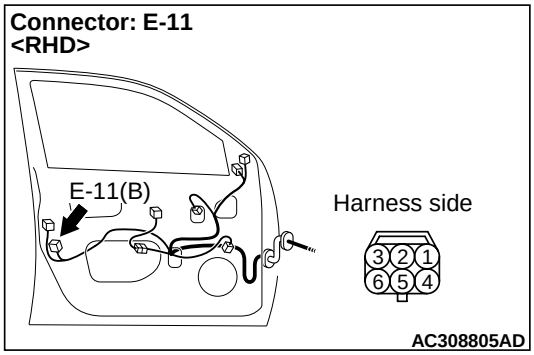

Q: Is the check result normal?
YES : Go to Step 3.
NO : Repair the defective connector.

Step 3. Check the door lock actuator (front: RH)

Check that the door lock actuator (front: RH) works normally. Refer to GROUP 42 – Door P.42-35.

Q: Is the check result normal?
YES : Go to Step 4.
NO : Replace the door lock actuator (front: RH).

Step 4. Connector check: C-217, C-220 ETACS-ECU connector

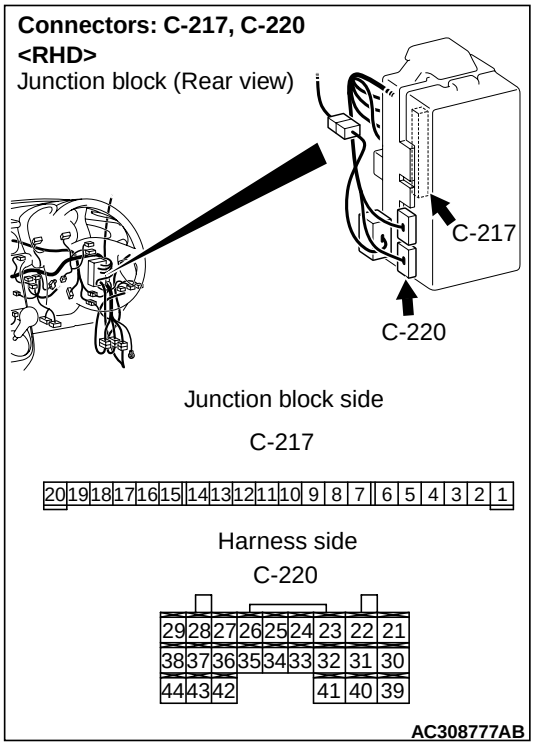

Q: Is the check result normal?
YES : Go to Step 5.
NO : Repair the defective connector.

Step 5. Check the wiring harness from C-217 ETACS-ECU connector terminal No. 12 and C-220 ETACS-ECU connector No. 22 to E-25 door lock actuator (front: RH) connector terminal Nos. 4 and 6.

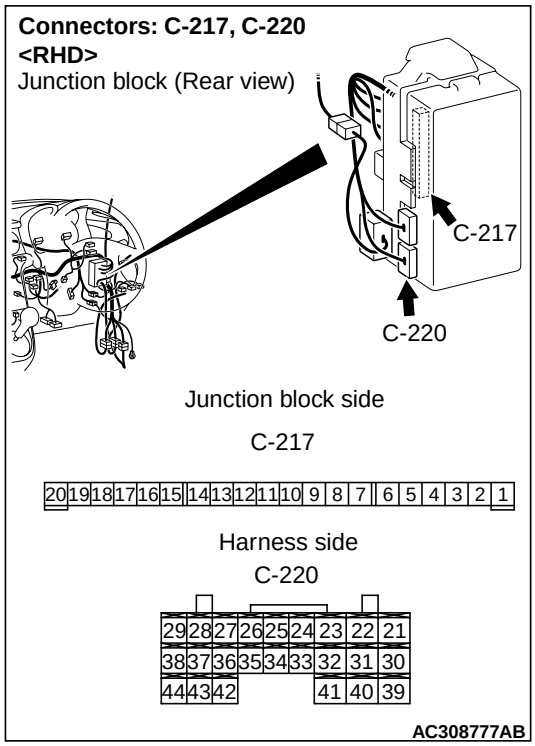

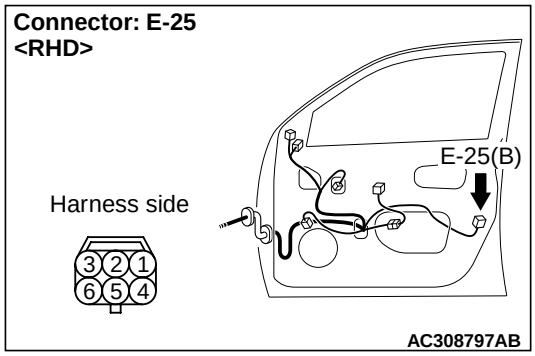

NOTE:

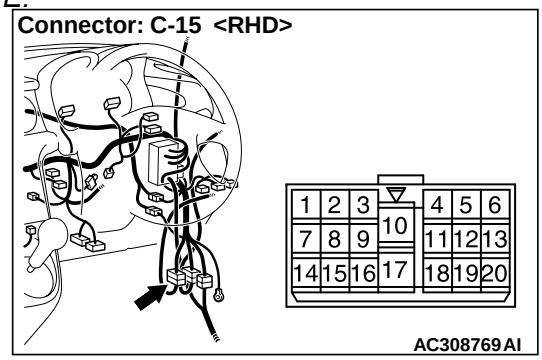

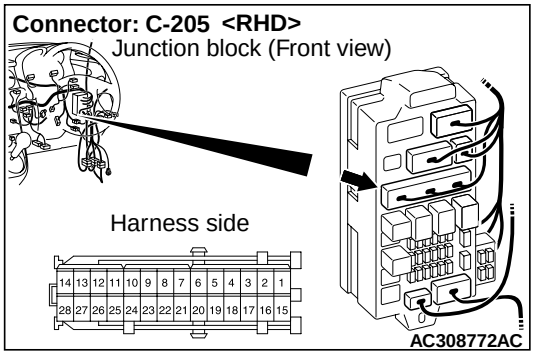

Prior to the wiring harness inspection, check intermediate connector C-15 and junction block connector C-205, and repair if necessary.

- Check the input and output lines for open circuit.

Q: Is the check result normal?

YES : The trouble can be an intermittent malfunction (Refer to GROUP 00 – How to Cope with Intermittent Malfunction P.00-6).

NO : Repair the wiring harness.

Step 6. Connector check: E-11 door lock actuator (front: LH) connector

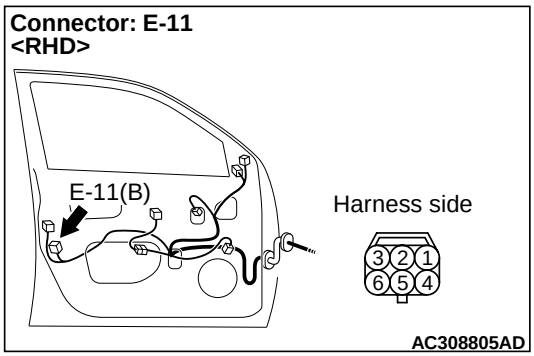

Q: Is the check result normal?

YES : Go to Step 7.

NO : Repair the defective connector.

Step 7. Check the door lock actuator (front: LH).
Check that the door lock actuator (front: LH) works normally. Refer to GROUP 42 – Door P.42-35.

Q: Is the check result normal?
YES : Go to Step 8.
NO : Replace the door lock actuator (front: LH).

Step 8. Connector check: C-217 ETACS-ECU connector

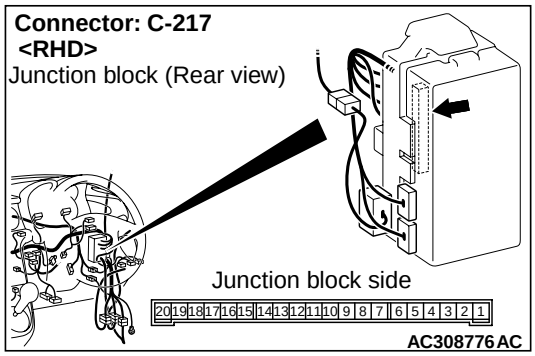

Q: Is the check result normal?
YES : Go to Step 9.
NO : Repair the defective connector.

Step 9. Check the wiring harness from C-217 ETACS-ECU connector terminal Nos. 12 and 13 to E-11 door lock actuator (front: LH) connector terminal Nos. 6 and 4.

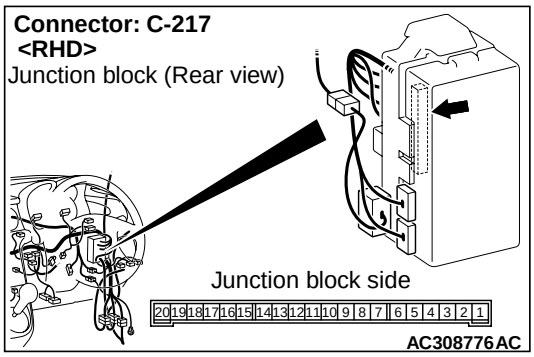

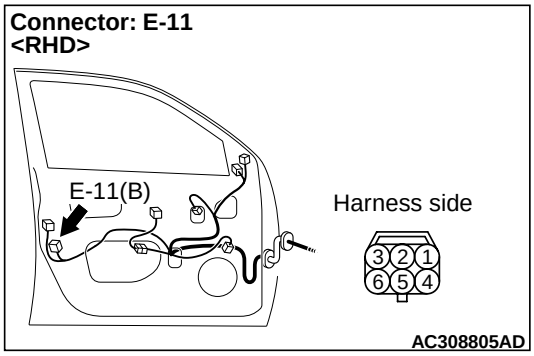

NOTE:

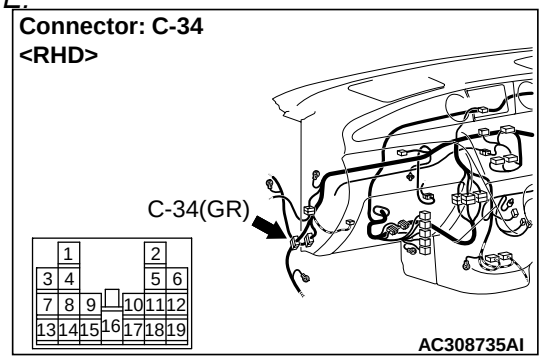

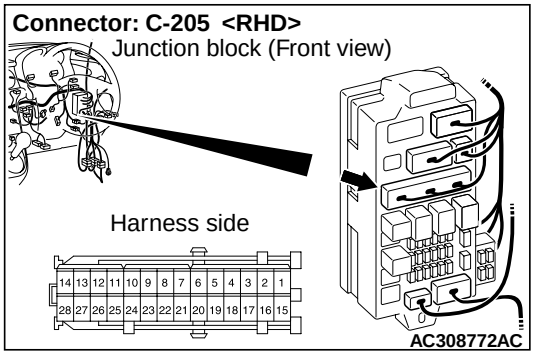

Prior to the wiring harness inspection, check intermediate connector C-34 and junction block connector C-205, and repair if necessary.

- Check the input and output lines for open circuit.

Q: Is the check result normal?
YES : The trouble can be an intermittent malfunction (Refer to GROUP 00 – How to Cope with Intermittent Malfunction P.00-6).
NO : Repair the wiring harness.

Step 10. Connector check: E-28 door lock actuator (rear: RH) connector

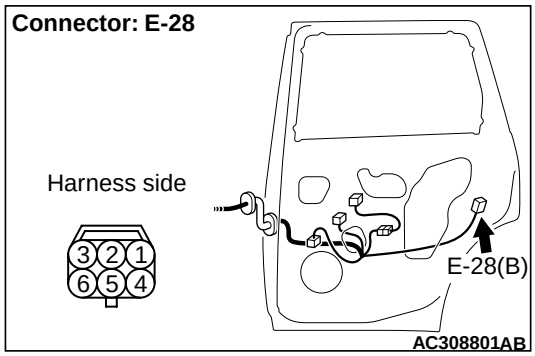

Q: Is the check result normal?
YES : Go to Step 11.
NO : Repair the defective connector.

Step 11. Check the door lock actuator (rear: RH).

Check that the door lock actuator (rear: RH) is in good condition. Refer to GROUP 42 – Door P.42-35.

Q: Is the check result normal?
YES : Go to Step 12.
NO : Replace the door lock actuator (rear: RH).

Step 12. Connector check: C-217 ETACS-ECU connector

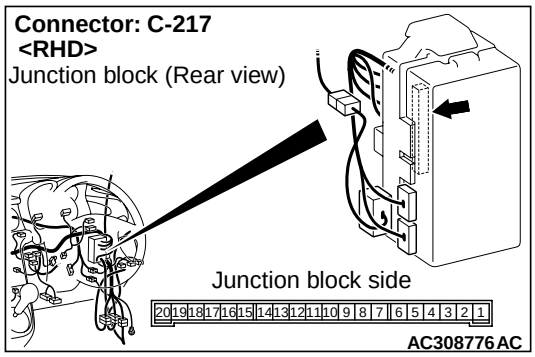

Q: Is the check result normal?
YES : Go to Step 13.
NO : Repair the defective connector.

Step 13. Check the wiring harness from C-217 ETACS-ECU connector terminal Nos. 12 and 13 to E-28 door lock actuator (rear: RH) connector terminal Nos. 2 and 3.

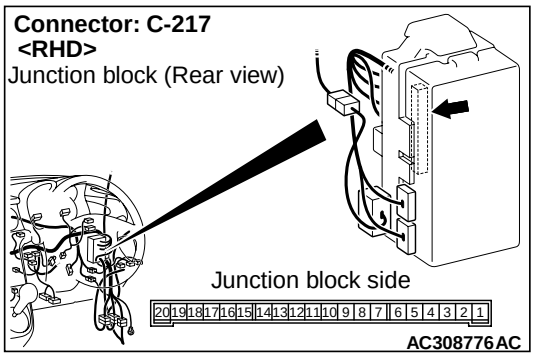

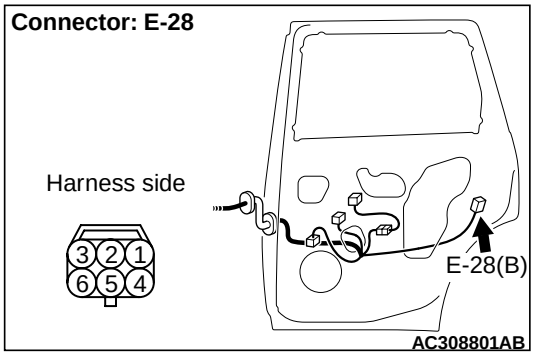

NOTE:

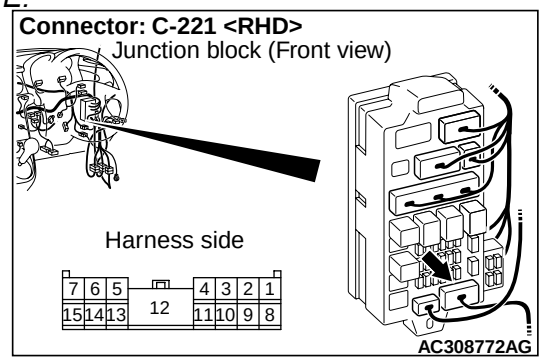

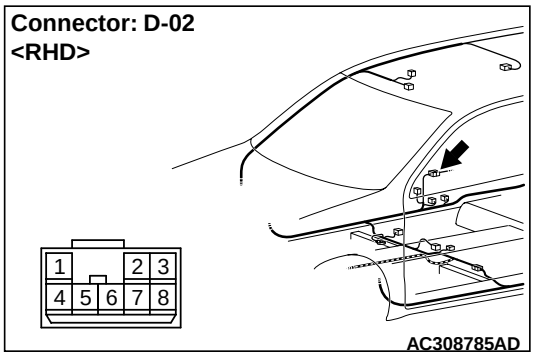

Prior to the wiring harness inspection, check D-02 intermediate connector and C-221 junction block connector, and repair if necessary.

- Check the input and output lines for open circuit.

Q: Is the check result normal?
YES : The trouble can be an intermittent malfunction (Refer to GROUP 00 – How to Cope with Intermittent Malfunction P.00-6).
NO : Repair the wiring harness.

Step 14. Connector check: E-08 door lock actuator (rear: LH) connector

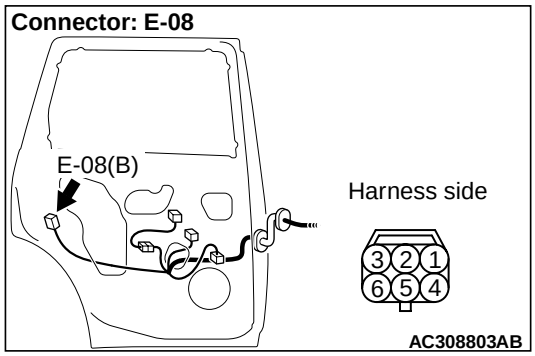

Q: Is the check result normal?
YES : Go to Step 15.
NO : Repair the defective connector.

Step 15. Check the door lock actuator (rear: LH).

Check that the door lock actuator (rear: LH) is in good condition. Refer to GROUP 42 – Door P.42-35.

Q: Is the check result normal?
YES : Go to Step 16.
NO : Replace the door lock actuator (rear: LH).

Step 16. Connector check: C-217 ETACS-ECU connector

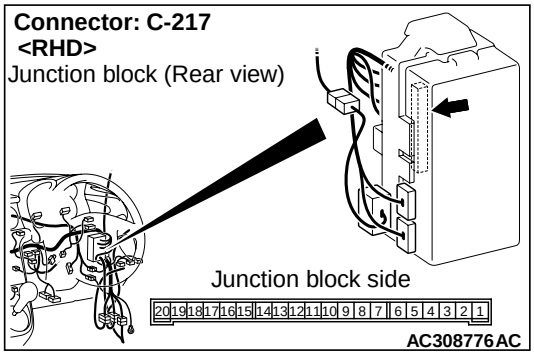

Q: Is the check result normal?
YES : Go to Step 17.
NO : Repair the defective connector.

Step 17. Check the wiring harness from C-217 ETACS-ECU connector terminal Nos. 12 and 13 to E-08 door lock actuator (rear: LH) connector terminal Nos. 3 and 2.

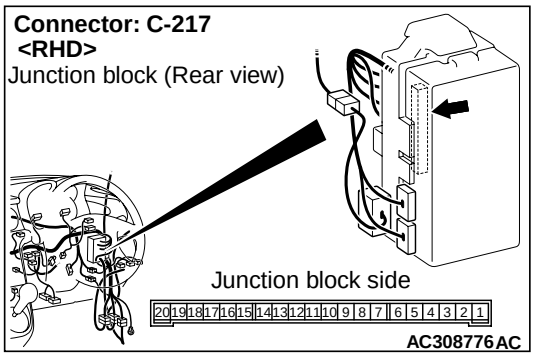

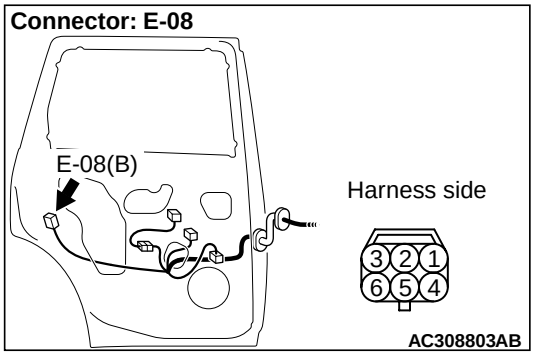

NOTE:

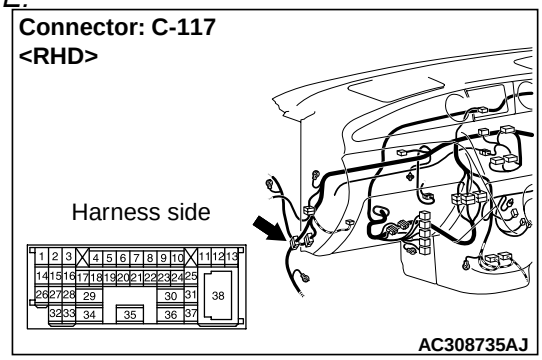

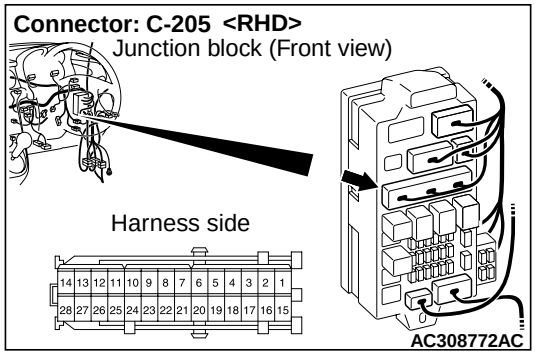

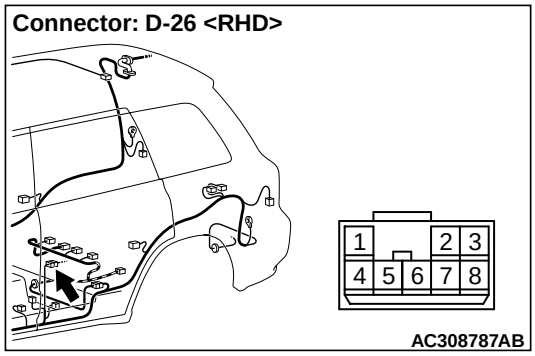

Prior to the wiring harness inspection, check C-117, D-26 intermediate connectors and C-205 junction block connector, and repair if necessary.

- Check the input and output lines for open circuit.

Q: Is the check result normal?
YES : The trouble can be an intermittent malfunction (Refer to GROUP 00 – How to Cope with Intermittent Malfunction P.00-6).
NO : Repair the wiring harness.

Step 18. Connector check: F-06 tailgate lock actuator connector

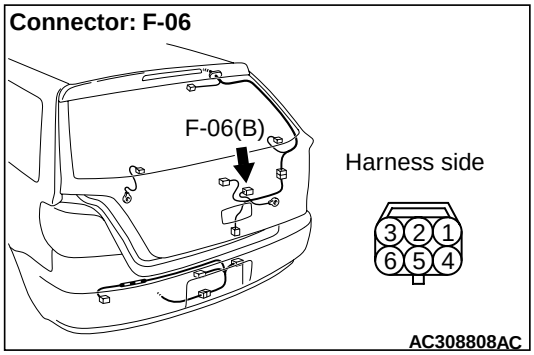

Q: Is the check result normal?
YES : Go to Step 19.
NO : Repair the defective connector.

Step 19. Check the tailgate lock actuator.

Check that the tailgate lock actuator is in good condition. Refer to GROUP 42 – Tailgate P.42-48.

Q: Is the check result normal?
YES : Go to Step 20.
NO : Replace the tailgate lock actuator.

Step 20. Connector check: C-217 ETACS-ECU connector

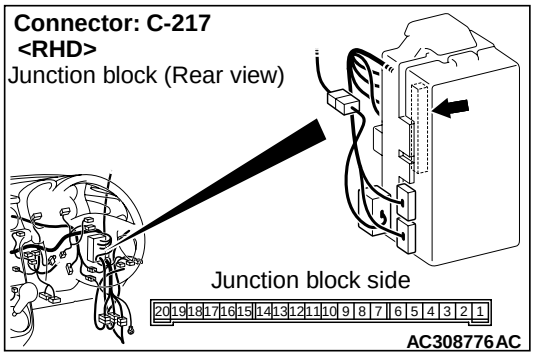

Q: Is the check result normal?
YES : Go to Step 21.
NO : Repair the defective connector.

Step 21. Check the wiring harness from C-217 ETACS-ECU connector terminal Nos. 12 and 13 to F-06 tailgate lock actuator connector terminal Nos. 2 and 3.

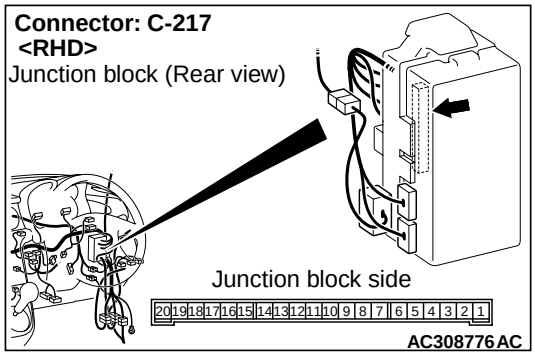

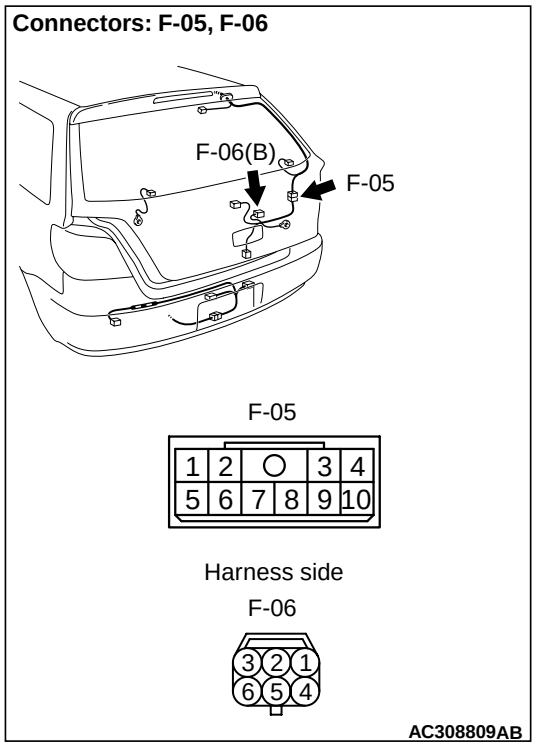

NOTE:

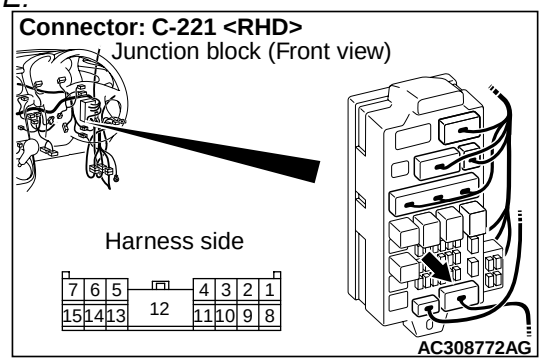

Prior to the wiring harness inspection, check intermediate connector F-05 and junction block connector C-221, and repair if necessary.

- Check the input and output lines for open circuit.

Q: Is the check result normal?

YES : The trouble can be an intermittent malfunction (Refer to GROUP 00 – How to Cope with Intermittent Malfunction P.00-6).

NO : Repair the wiring harness.

INSPECTION PROCEDURE C-3: The central door locking system can not be operated by means of the front passenger's door lock key cylinder.

⚠ CAUTION

Whenever the ECU is replaced, ensure that the input and output signal circuits are normal.

Central Door Lock (Door Lock Key Cylinder Switch) Circuit

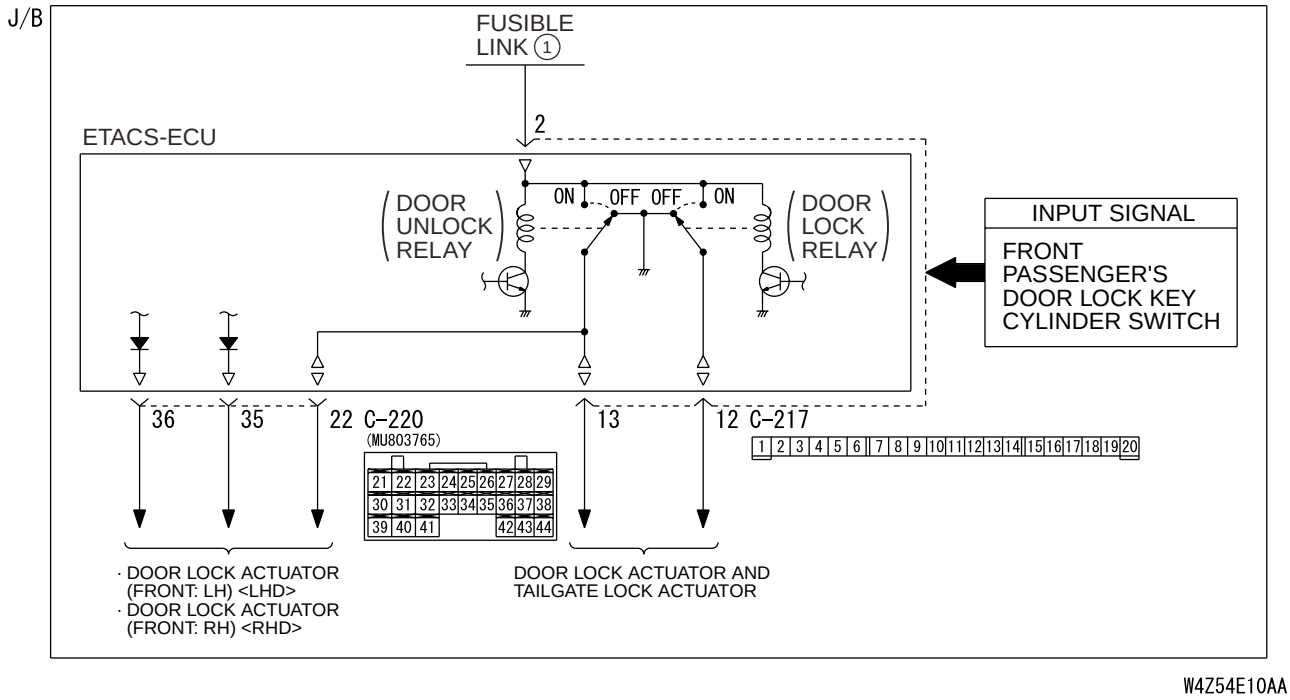

COMMENTS ON TROUBLE SYMPTOM

If the central door locking system does not work by means of the front passenger's door lock key cylinder, the front passenger's door lock key cylinder or the ETACS-ECU may be defective.

POSSIBLE CAUSES

- Malfunction of the front passenger's door lock key cylinder
- Malfunction of the ETACS-ECU
- Damaged harness wires and connectors

DIAGNOSTIC PROCEDURE

Step 1. Check the operation of the central door locking system.
Check that the central door locking system works normally by means of the driver's door lock key cylinder and inside lock knob.

Q: Is the check result normal?
YES : Go to Step 2.
NO : Refer to inspection procedure C-1 "Central door locking system does not work at all <L.H. drive vehicles>P.54B-60 or <R.H. drive vehicles>P.54B-63 ."

Step 2. Pulse check
Check the input signal from the front passenger's door lock key cylinder switch.

System switch	Check condition
Front passenger's door lock key cylinder switch	Turn the key to the lock or unlock position

OK: The MUT-II/III sounds or the voltmeter needle fluctuates.

Q: Is the check result normal?
YES : Go to Step 3.
NO : Refer to inspection procedure N-18 "The front passenger's door lock key cylinder switch signal is not received <L.H. drive vehicles>P.54B-380 or <R.H. drive vehicles>P.54B-383 ."

Step 3. Retest the system.
Check that the central door locking system works normally by means of the front passenger's door lock key cylinder.

Q: Is the check result normal?
YES : The trouble can be an intermittent malfunction (Refer to GROUP 00 – How to Cope with Intermittent Malfunction P.00-6).
NO : Replace the ETACS-ECU.

INSPECTION PROCEDURE C-4: The Ignition Key Reminder Function does not Work Normally.

⚠ CAUTION
Whenever the ECU is replaced, ensure that the input and output signal circuits are normal.

Ignition Key Reminder Function

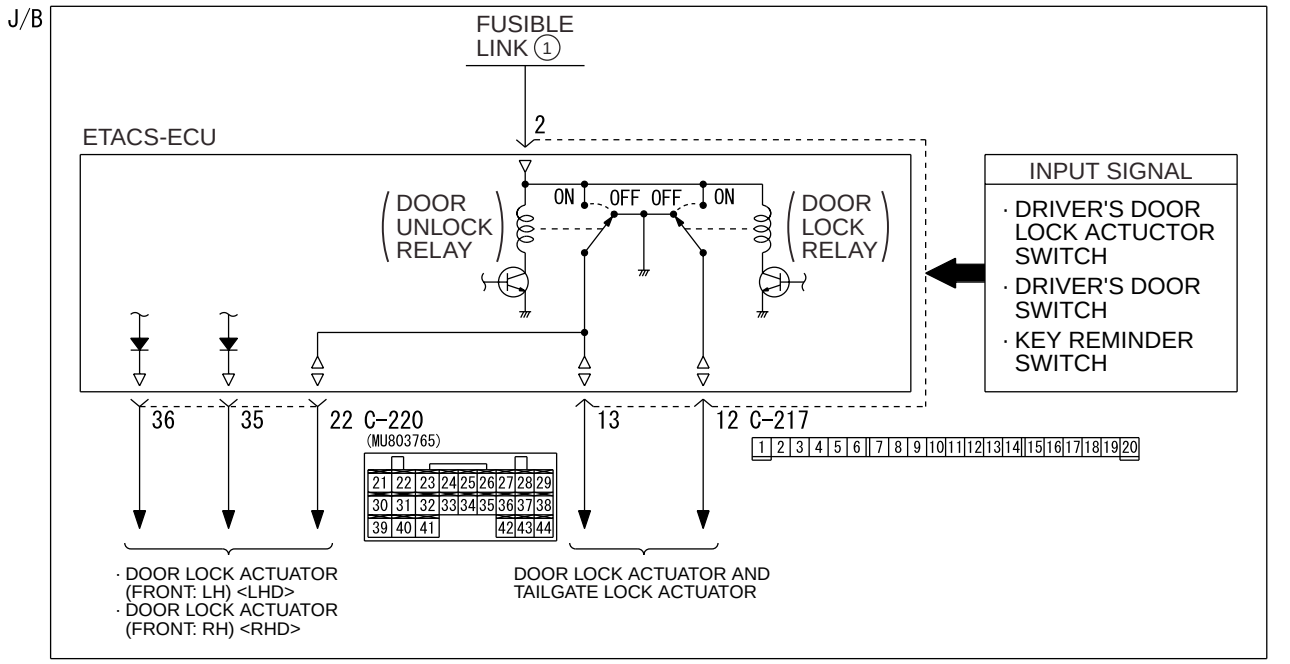

W4Z54E11AA

COMMENTS ON TROUBLE SYMPTOM

If the key reminder function does not work normally, the input signal circuits below or the ETACS-ECU may be defective.

- Key reminder switch
- Driver's door switch
- Driver's door lock actuator

POSSIBLE CAUSES

- Malfunction of the key reminder switch
- Malfunction of the driver's door switch
- Malfunction of the driver's door lock actuator
- Malfunction of the ETACS-ECU
- Damaged harness wires and connectors

DIAGNOSIS PROCEDURE

Step 1. Check the power supply circuit.
When the ignition switch is turned to the LOCK (OFF) position, check if the hazard warning lamps illuminate.

Q: Is the check result normal?

YES : Go to Step 2.
NO : Refer to inspection procedure A-2 "Check the ETACS-ECU battery power supply circuit" P.54B-52.

Step 2. Pulse check
Check the input signals below which are related to the key reminder function.

System switch	Check condition
Driver's door switch	When the driver's door is opened
Key reminder switch	When the inserted ignition key is pulled out
Driver's door lock actuator switch	When the driver's key cylinder or inside lock knob is unlocked or locked

OK: The MUT-II/III sounds or the voltmeter needle fluctuates.

Q: Is the check result normal?

All the signals are received normally. : Go to Step 3.

The driver's door switch signal is not received. : Refer to inspection procedure N-4 "The front door switch signal is not received <L.H. drive vehicles>P.54B-315 or <R.H. drive vehicles>P.54B-317."

The key reminder switch signal is not received. : Refer to inspection procedure N-9 "The key reminder switch signal is not received P.54B-334."

The driver's door lock actuator switch signal is not received. : Refer to inspection procedure N-12 "The driver's door lock actuator signal is not received <L.H. drive vehicles>P.54B-350 or <R.H. drive vehicles>P.54B-354 .

Step 3. Retest the system.

Q: Does the ignition key reminder function work normally?

YES : The trouble can be an intermittent malfunction (Refer to GROUP 00 – How to Cope with Intermittent Malfunction P.00-6).

NO : Replace the ETACS-ECU.

INSPECTION PROCEDURE C-5: The impact detection door unlock function does not function.

⚠ CAUTION

Whenever the ECU is replaced, ensure that the input and output signal circuits are normal.

COMMENTS ON TROUBLE SYMPTOM

If the impact detection door unlock function does not work normally, the input signal circuit from the impact detection sensor, the SRS-ECU or the ETACS-ECU may be defective.

POSSIBLE CAUSES

- Malfunction of the SRS-ECU
- Malfunction of the ETACS-ECU
- Damaged harness wires and connectors

DIAGNOSTIC PROCEDURE

Use the MUT-II/III to confirm a diagnosis code. (MUT-II/III diagnosis code)

Check whether the ETACS-ECU sets diagnosis code No.31 or 32.

Q: Is the diagnosis code set?

YES : Refer to P.54B-37.

NO : Replace the ETACS-ECU.

POWER WINDOWS

INSPECTION PROCEDURE D-1: Power windows do not work at all.

⚠ CAUTION

Whenever the ECU is replaced, ensure that the input and output signal circuits are normal.

Power Window Relay Circuit <LHD>

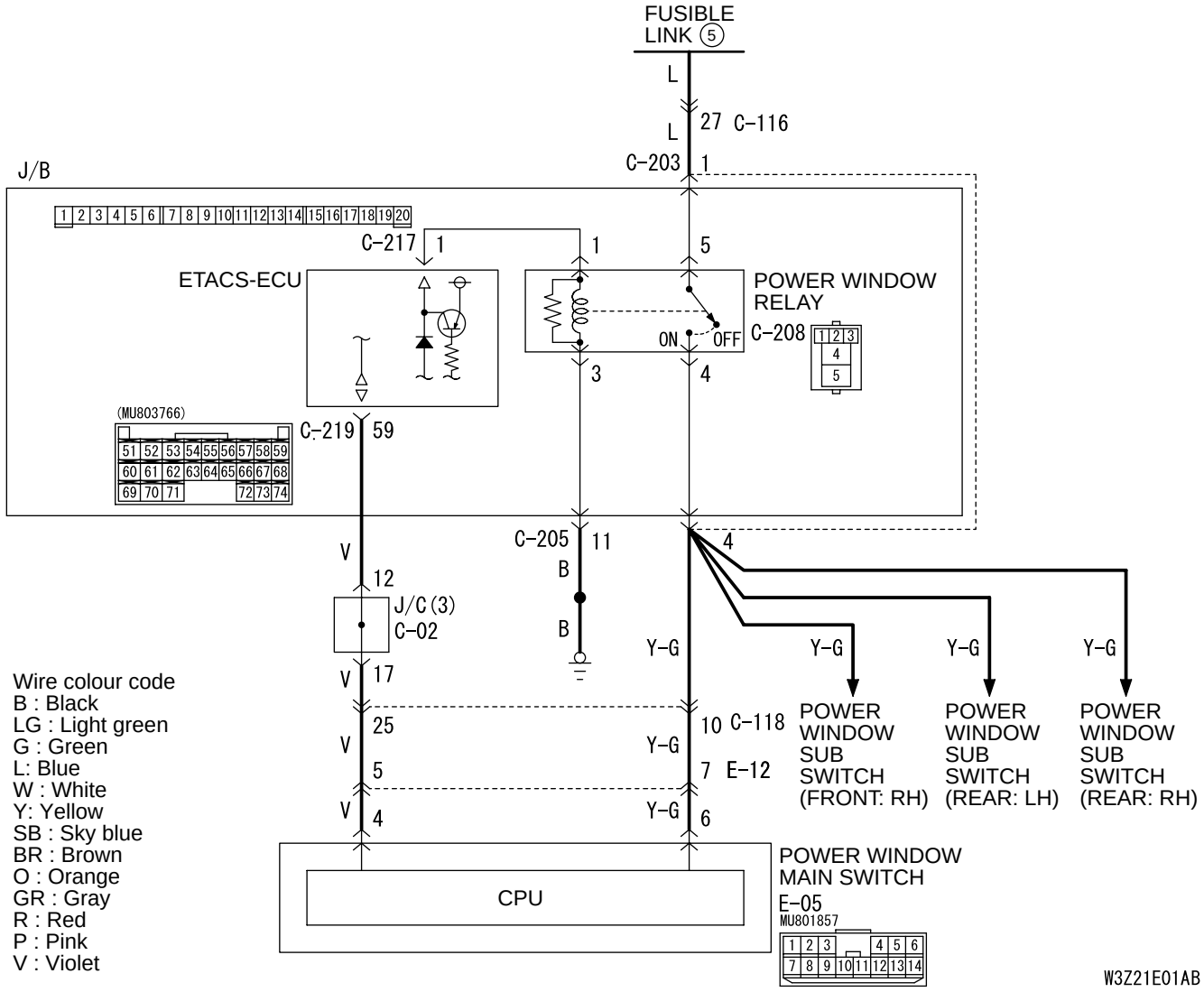

Power Window Relay Circuit <RHD>

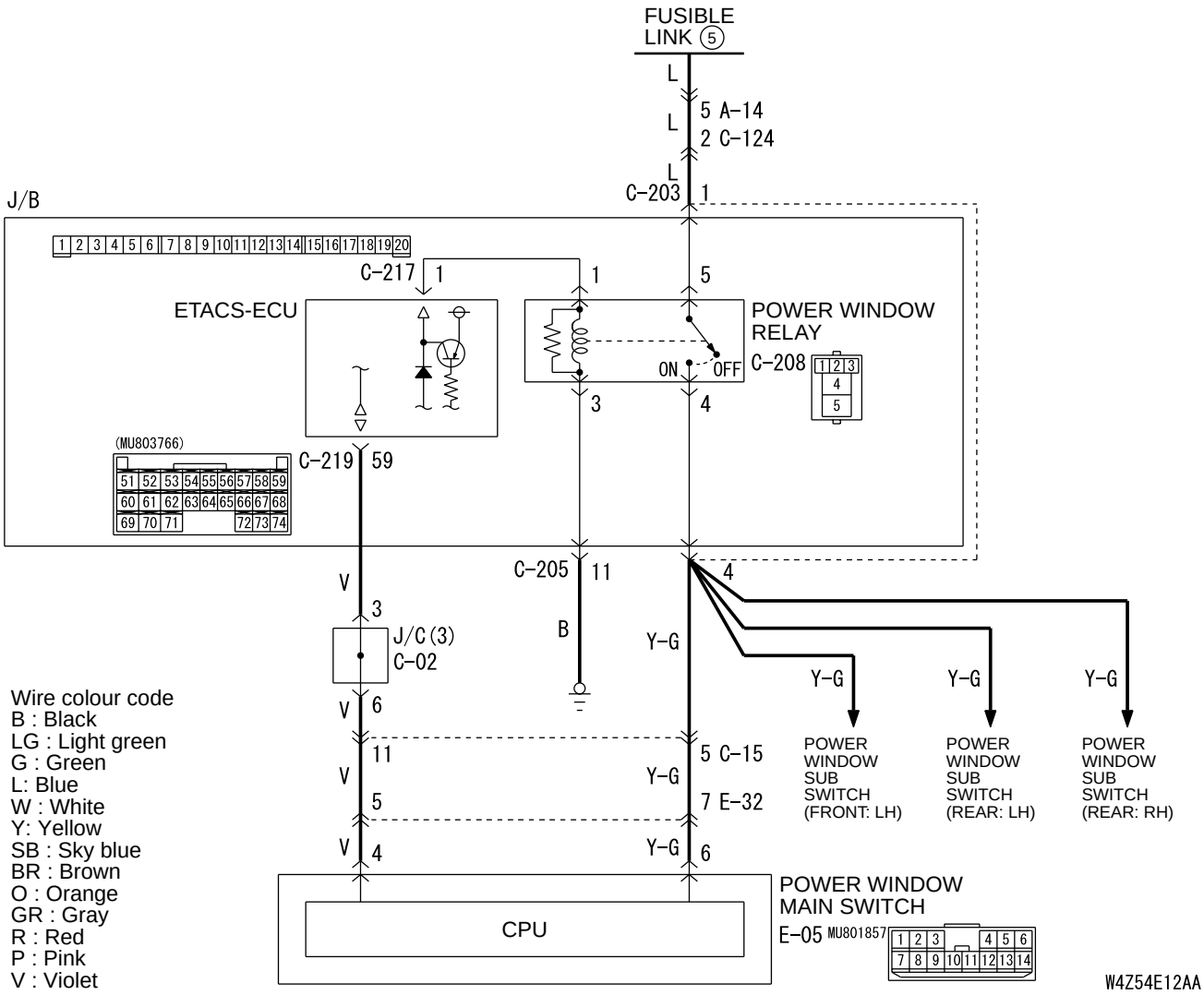

COMMENTS ON TROUBLE SYMPTOM

If the power windows do not work at all, the power window relay, the power window main switch or the ETACS-ECU may be defective.

POSSIBLE CAUSES

- Malfunction of the power window relay
- Malfunction of the power window main switch
- Malfunction of the ETACS-ECU
- Damaged harness wires and connectors

DIAGNOSIS PROCEDURE

Step 1. Pulse check

Check the input signal from the ignition switch.

System switch	Check condition
Ignition switch (IG1)	When turned from ACC to ON

OK: The MUT-II/III sounds or the voltmeter needle fluctuates.

Q: Is the check result normal?
YES : Go to Step 2.
NO : Refer to inspection procedure N-2 "The ignition switch (IG1) signal is not received P.54B-301."

Step 2. Connector check: C-208 power window relay connector

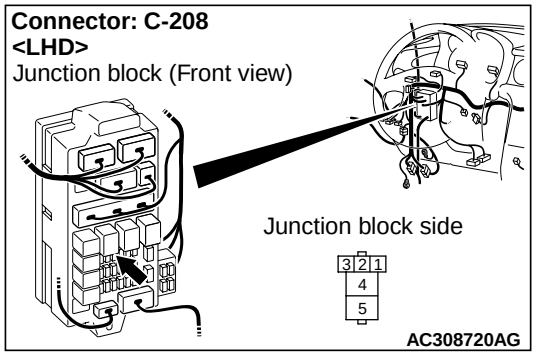

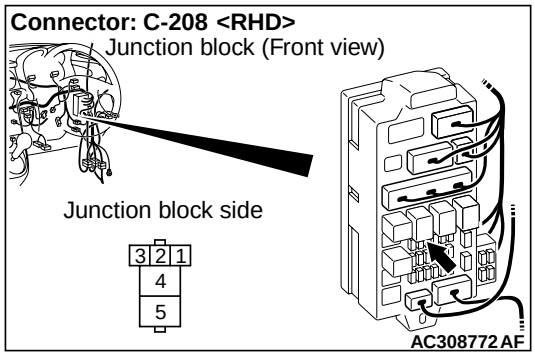

Q: Is the check result normal?
YES : Go to Step 3.
NO : Repair the connector.

Step 3. Check the power window relay.

Refer to GROUP 42 – Door – On-vehicle Service P.42-27.

Q: Is the check result normal?
YES : Go to Step 4.
NO : Replace the power window relay.

Step 4. Connector check: E-05 power window main switch connector

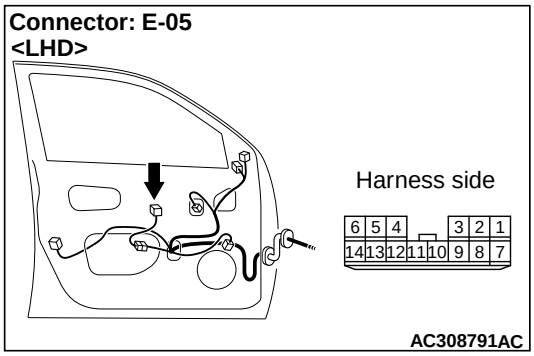

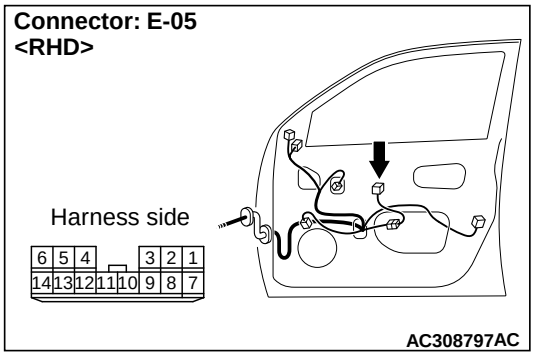

Q: Is the check result normal?
YES : Go to Step 5.
NO : Repair the connector.

Step 5. Measure the voltage at the E-05 power window main switch connector.

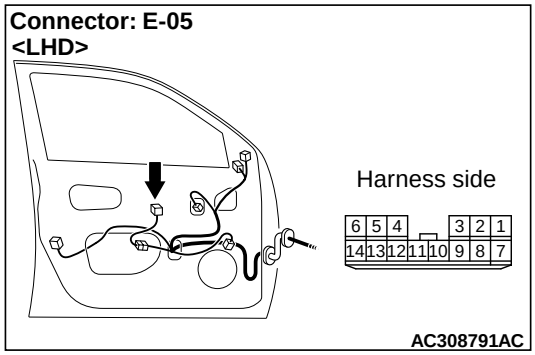

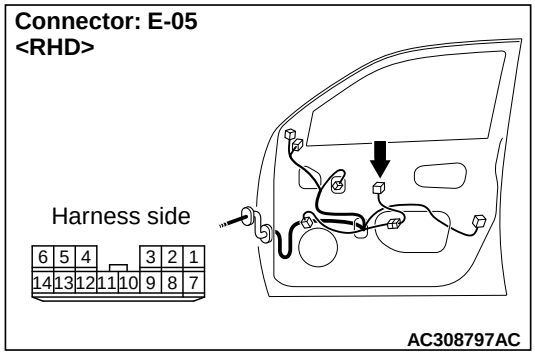

(1) Disconnect the connector, and measure at the wiring harness side.

(2) Turn the ignition switch to the ON position.

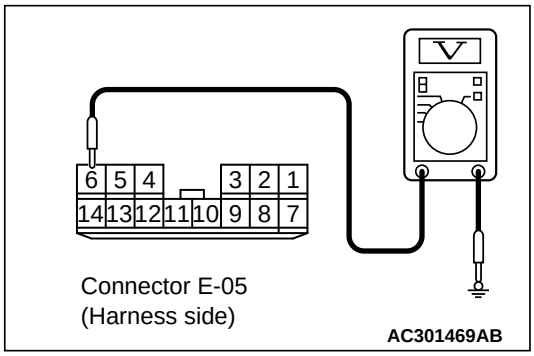

(3) Voltage between terminal 6 and body earth

OK: System voltage

Q: Is the check result normal?

YES : Go to Step 9.

NO : Go to Step 6.

Step 6. Check the wiring harness between C-208 power window relay connector terminal No.4 and E-05 power window main switch connector terminal No.6.

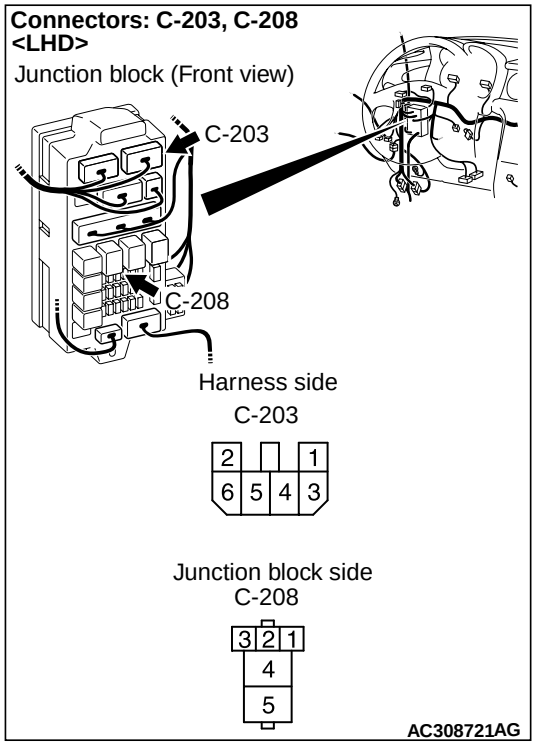

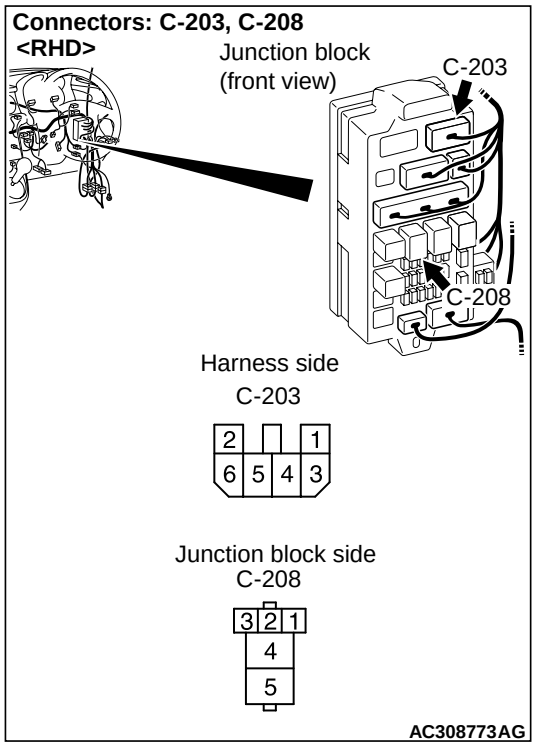

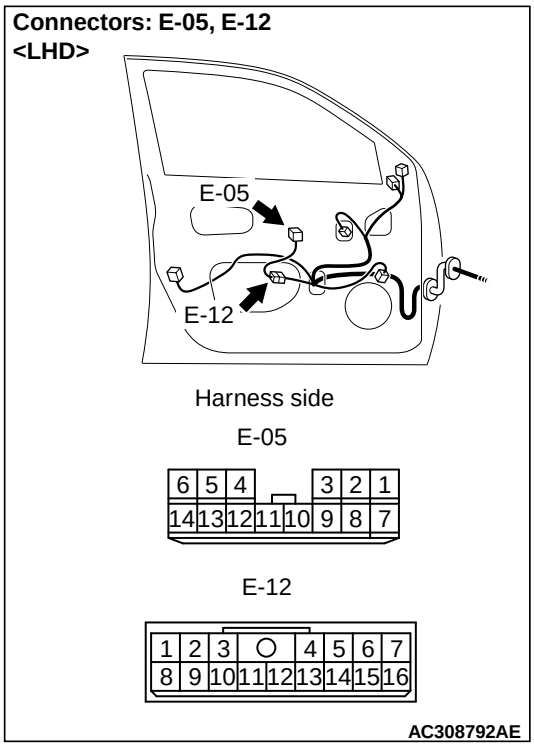

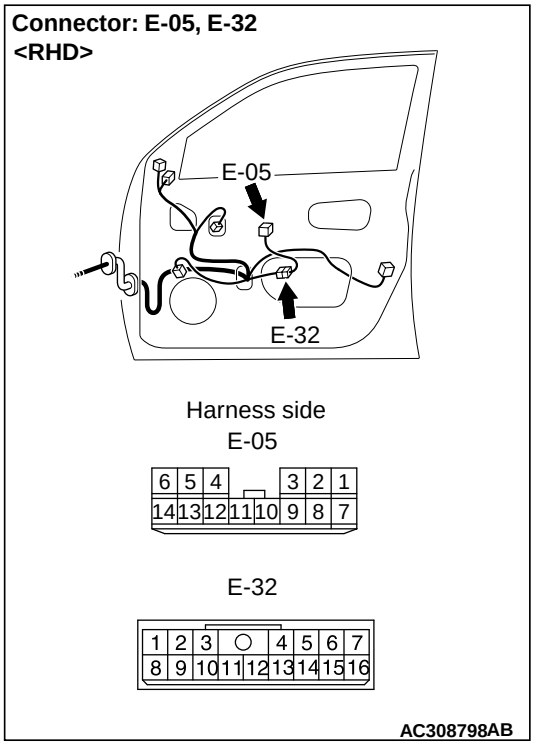

NOTE:

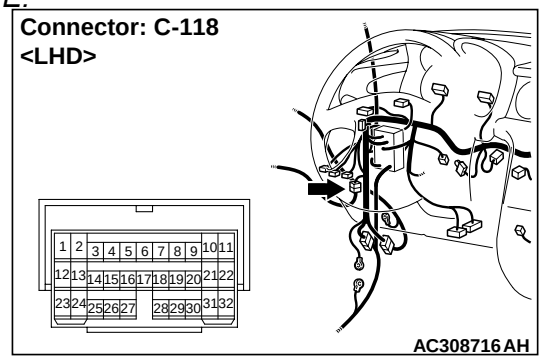

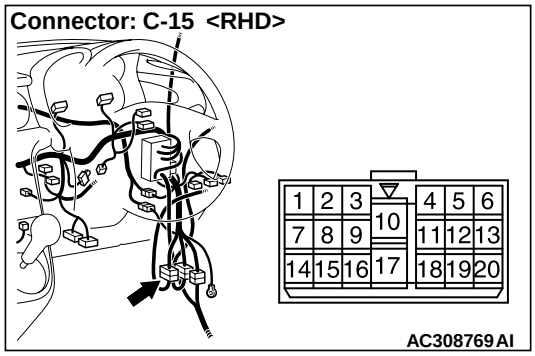

Prior to the wiring harness inspection, check intermediate connectors C-15 <R.H. drive vehicles>, C-118 <L.H. drive vehicles>, E-12 <L.H. drive vehicles>, E-32 <R.H. drive vehicles> and junction block connector C-203, and repair if necessary.

- Check the power supply line for open circuit.

Q: Is the check result normal?

YES : The trouble can be an intermittent malfunction (Refer to GROUP 00, How to Cope with Intermittent Malfunction P.00-6).

NO : Repair the harness wire, and then go to Step 7.

Step 7. Measure the voltage at C-208 power window relay connector.

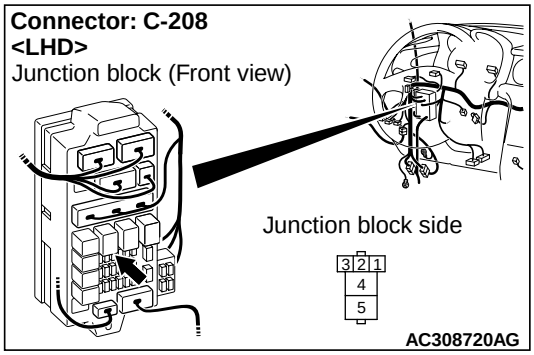

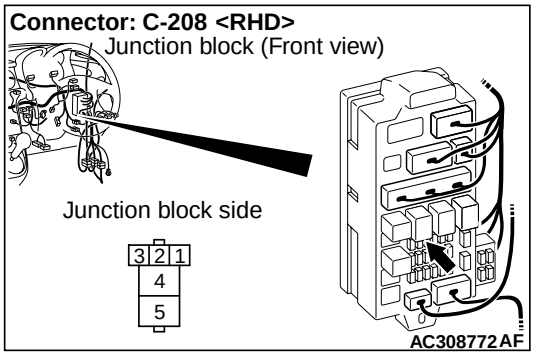

(1) Disconnect the connector, and measure at the wiring harness side.

(2) Turn the ignition switch to the ON position.

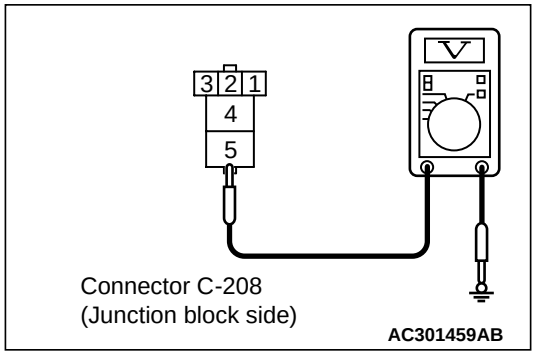

(3) Voltage between terminal 5 and body earth

OK: System voltage

Q: Is the check result normal?

YES : Go to Step 9.

NO : Go to Step 8.

Step 8. Check the wiring harness between C-208 power window relay connector terminal No.5 and fusible link (5).

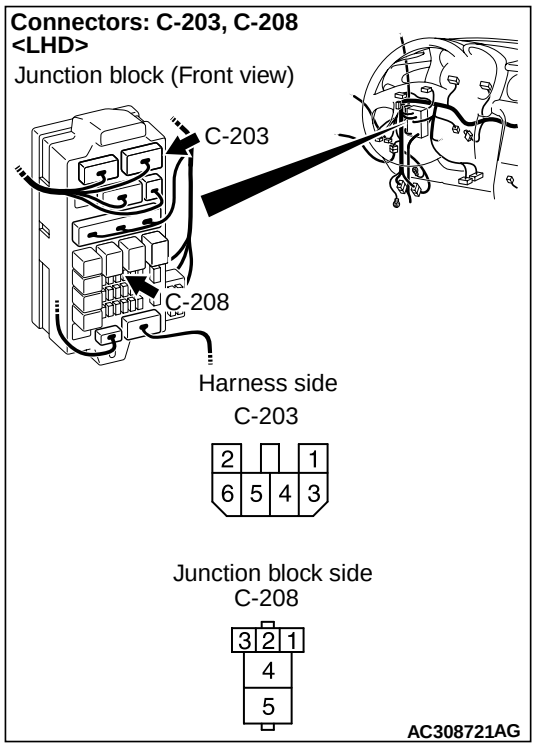

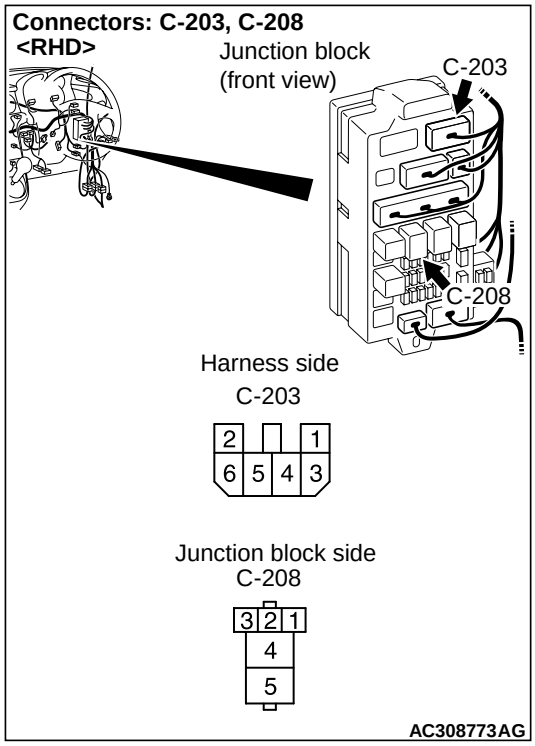

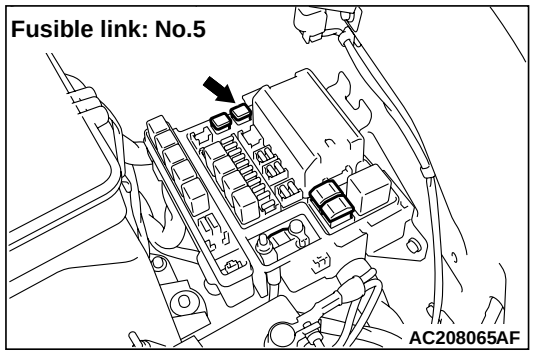

NOTE:

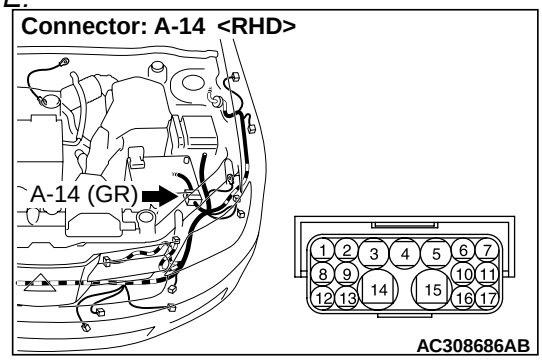

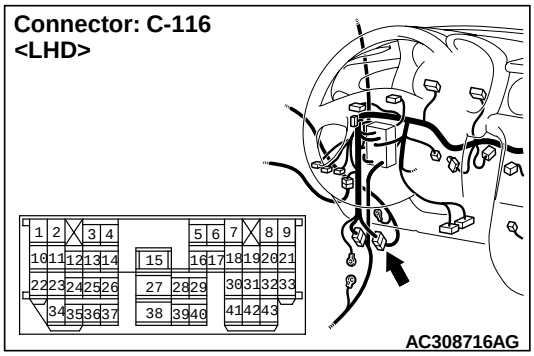

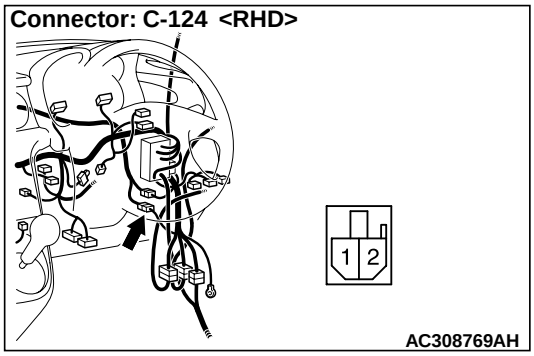

Prior to the wiring harness inspection, check intermediate connectors A-14 <R.H. drive vehicles>, C-116 <L.H. drive vehicles>, C-124 <R.H. drive vehicles> and junction block connector C-203, and repair if necessary.

- Check the power supply line for open circuit.

Q: Is the check result normal?
YES : The trouble can be an intermittent malfunction (Refer to GROUP 00, How to Cope with Intermittent Malfunction P.00-6).
NO : Repair the wiring harness.

Step 9. Measure the resistance at C-208 power window relay connector.

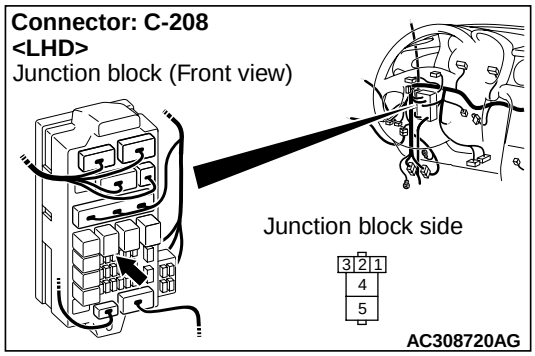

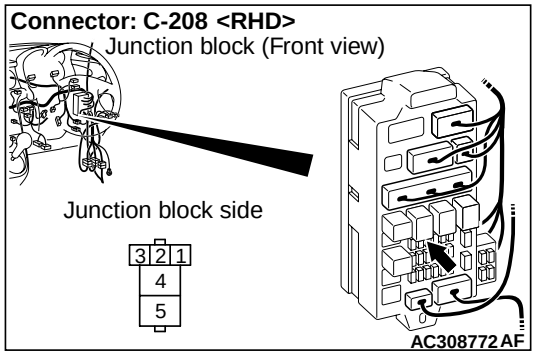

(1) Disconnect the connector, and measure at the wiring harness side.

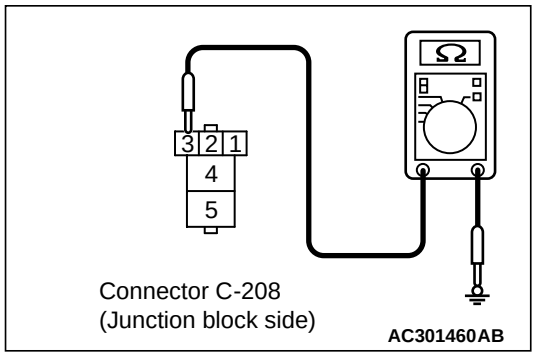

(2) Resistance between terminal 3 and body earth

OK: 2Ω or less

Q: Is the check result normal?
YES : Go to Step 11.
NO : Go to Step 10.

Step 10. Check the wiring harness between C-208 power window relay connector terminal No.3 and body earth.

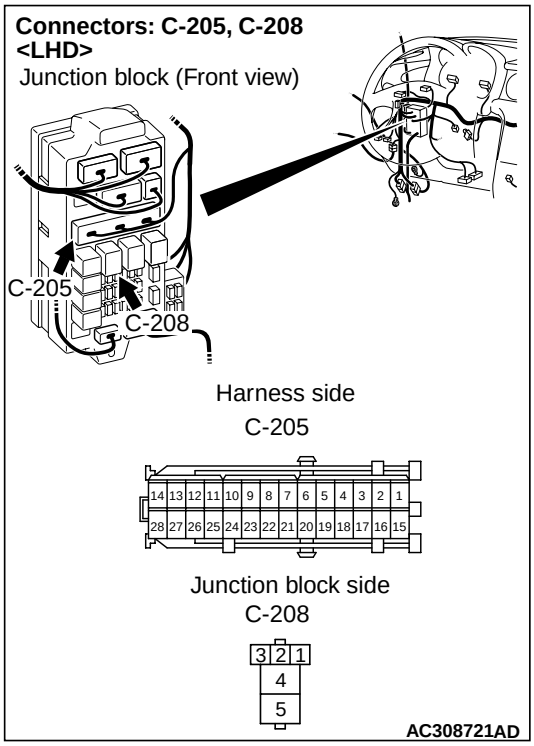

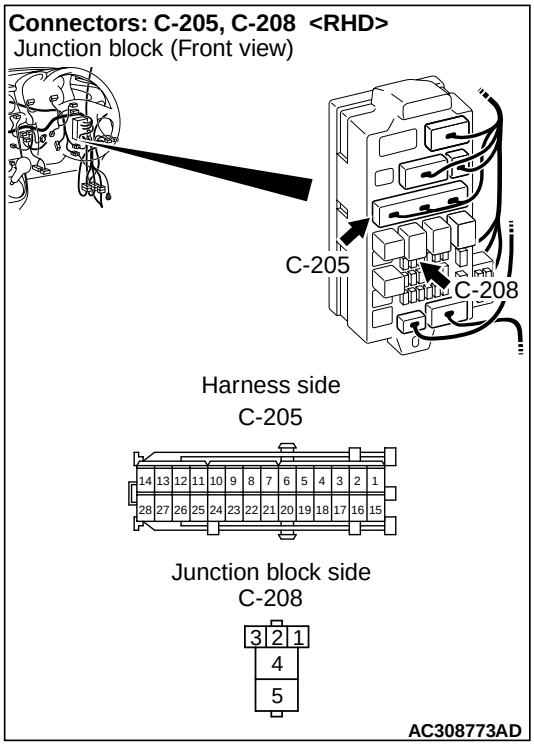

NOTE: Prior to the wiring harness inspection, check junction block connector C-205, and repair if necessary.

- Check the earth wires for open circuit.

Q: Is the check result normal?
YES : The trouble can be an intermittent malfunction (Refer to GROUP 00, How to Cope with Intermittent Malfunction P.00-6).
NO : Repair the wiring harness.

Step 11. Connector check: C-217 ETACS-ECU connector

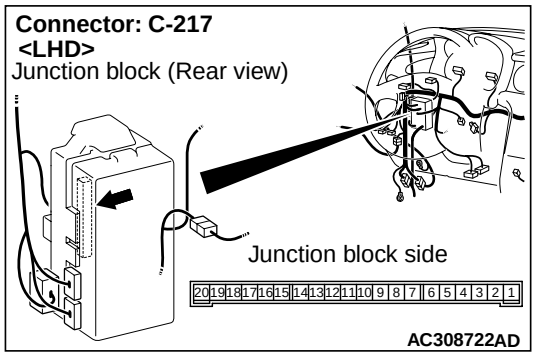

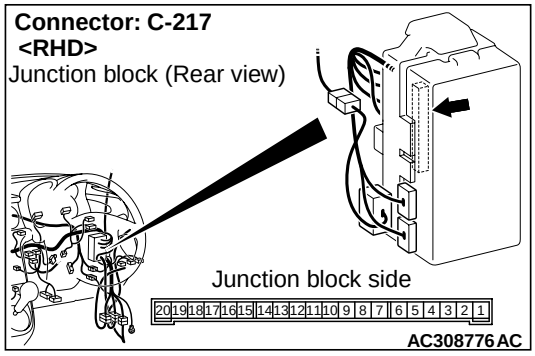

Q: Is the check result normal?
YES : Go to Step 12.
NO : Repair the connector.

Step 12. Connector check: C-219 ETACS-ECU connector

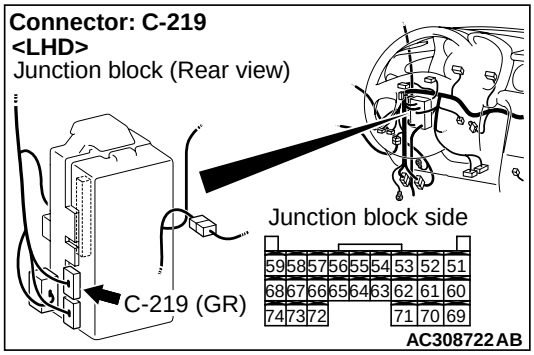

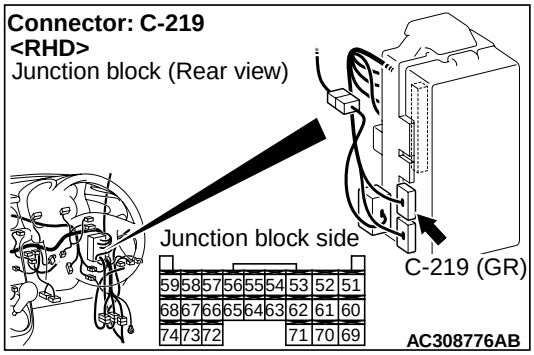

Q: Is the check result normal?
YES : Go to Step 13.
NO : Repair the connector.

Step 13. Check the wiring harness between C-219 ETACS-ECU connector terminal No.59 and E-05 power window main switch connector terminal No.4.

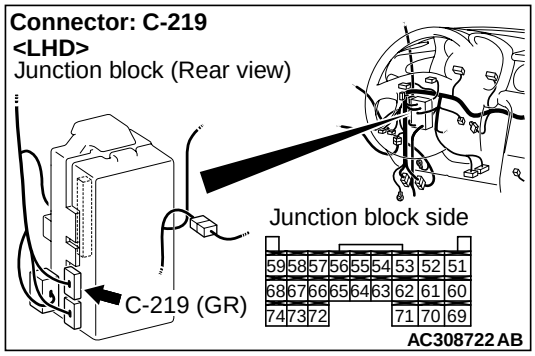

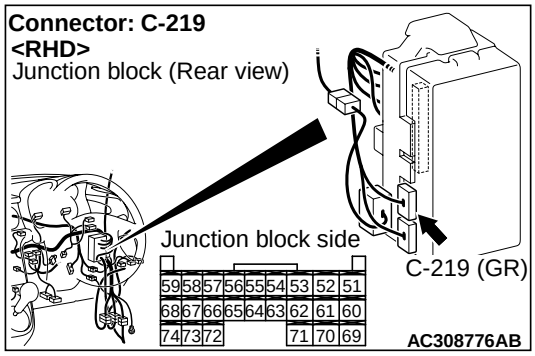

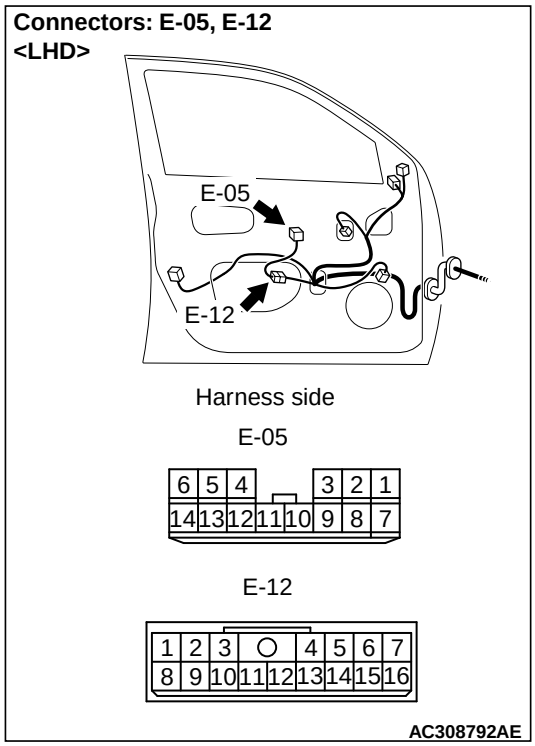

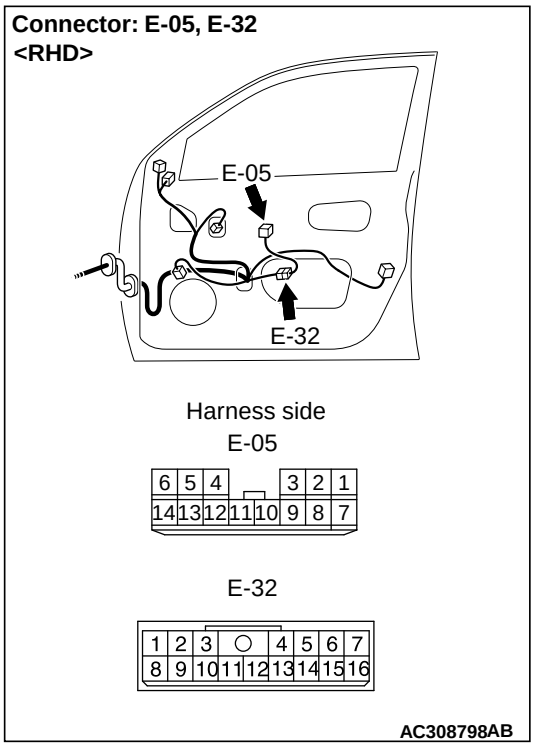

NOTE:

Connectors: C-02, C-118 <LHD>

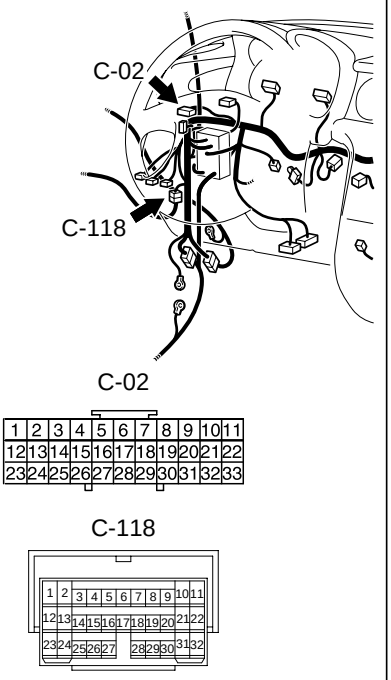

AC308717AK

Connectors: C-02, C-15 <RHD>

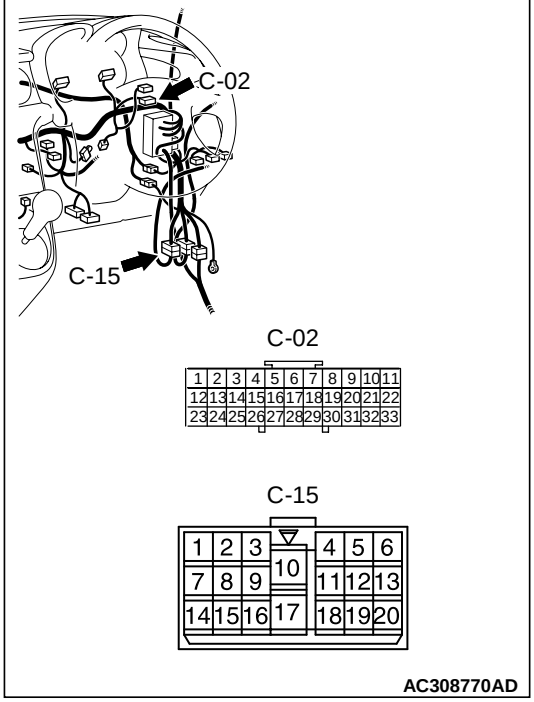

AC308770AD

Prior to the wiring harness inspection, check intermediate connectors C-15 <R.H. drive vehicles>, C-118 <L.H. drive vehicles>, E-12 <L.H. drive vehicles>, E-32 <R.H. drive vehicles> and joint connector C-02, and repair if necessary.

- Check the communication lines for open circuit.

Q: Is the check result normal?
YES : Go to Step 14.
NO : Repair the wiring harness.

Step 14. Retest the system.

After the power window main switch is replaced, check that all the power windows work.

(1) Replace the power window main switch.
(2) Check that the all the power windows work.

Q: Is the check result normal?
YES : The trouble can be an intermittent malfunction (Refer to GROUP 00 – How to Cope with Intermittent Malfunction P.00-6).
NO : Replace the ETACS-ECU.

INSPECTION PROCEDURE D-2: Driver's power window does not work by means of the power window main switch. <L.H. drive vehicles>

Power Window (front: LH) Circuit

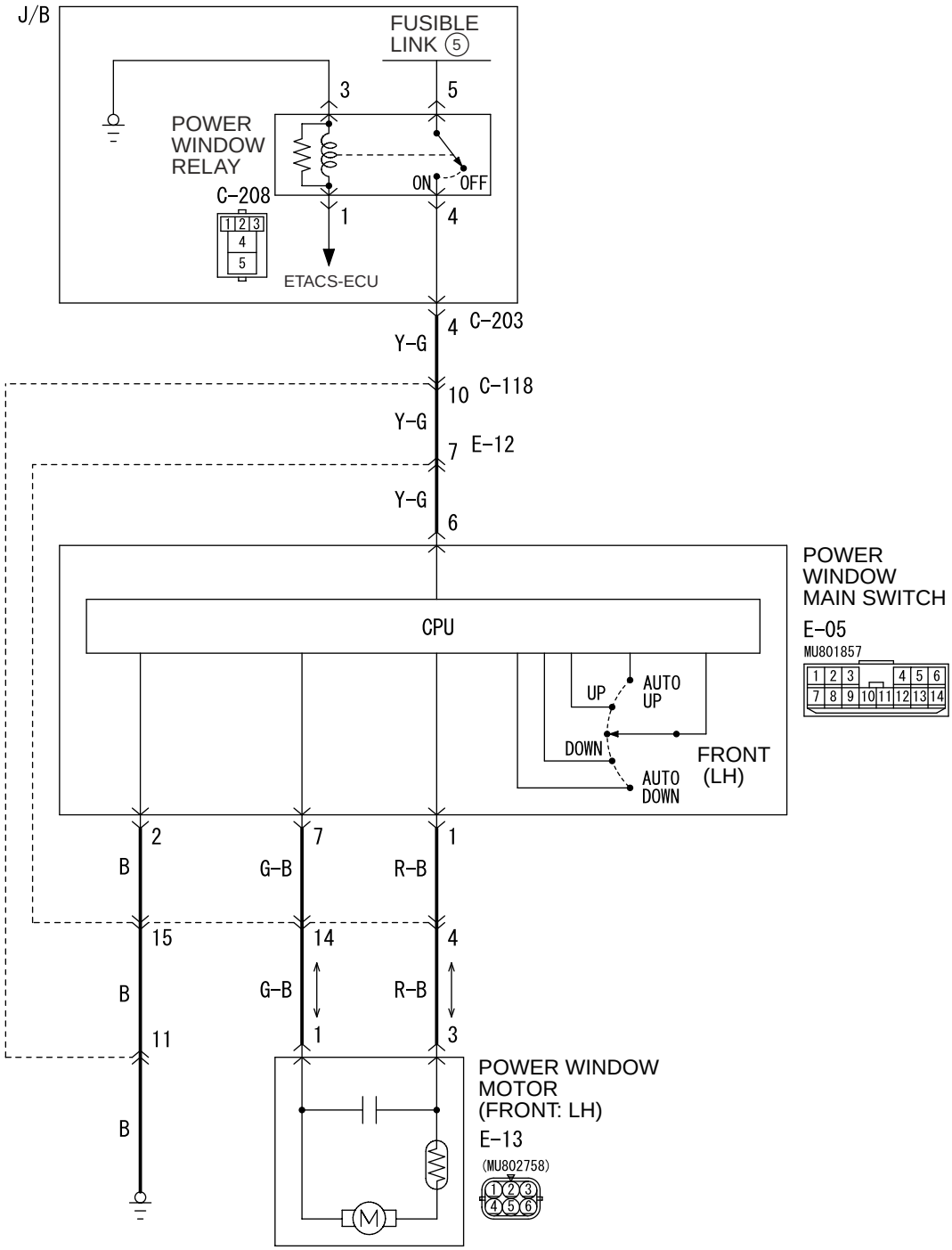

W3Z20E01AA

Wire colour code
B : Black LG : Light green G : Green L : Blue W : White Y : Yellow SB : Sky blue
BR : Brown O : Orange GR : Gray R : Red P : Pink V : Violet

COMMENTS ON TROUBLE SYMPTOM

If the driver's power window does not work by means of the power window main switch, the power window main switch or the driver's door power window motor may be defective.

POSSIBLE CAUSES

- Malfunction of the power window main switch
- Malfunction of the power window motor (front, LH)
- Damaged harness wires and connectors

DIAGNOSIS PROCEDURE

Step 1. Check the power window main switch.
Check that all of the front passenger's and rear door power windows can operate by means of the power window main switch.

Q: Is the check result normal?
YES : Go to Step 2.
NO : Refer to Inspection Procedure D-1 "Power windows do not work at all P.54B-86."

Step 2. Connector check: E-05 power window main switch connector

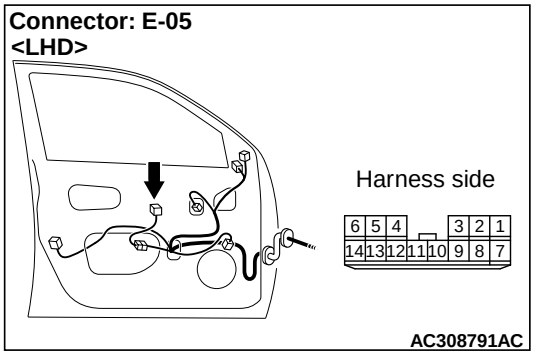

Q: Is the check result normal?
YES : Go to Step 3.
NO : Repair the connector.

Step 3. Measure the resistance at the E-05 power window main switch connector.

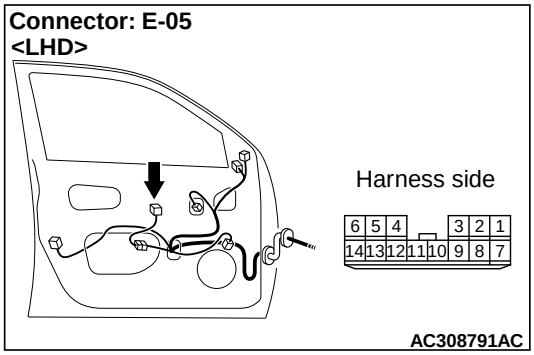

(1) Disconnect the connector, and measure at the wiring harness side.

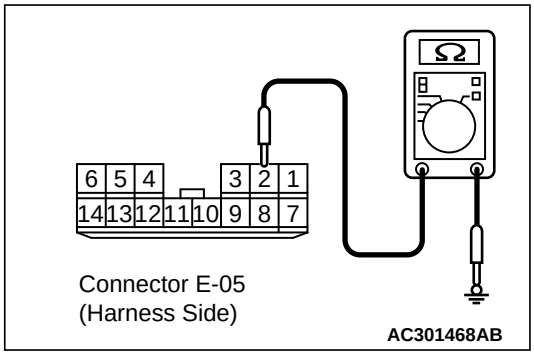

(2) Resistance between terminal 2 and body earth

OK: 2Ω or less

Q: Is the check result normal?
YES : Go to Step 5.
NO : Go to Step 4.

Step 4. Check the wiring harness between E-05 power window main switch connector terminal No.2 and body earth.

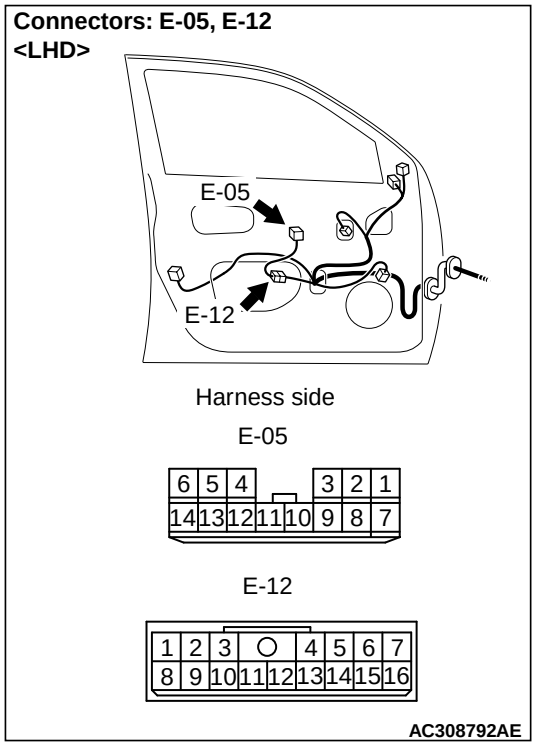

NOTE:

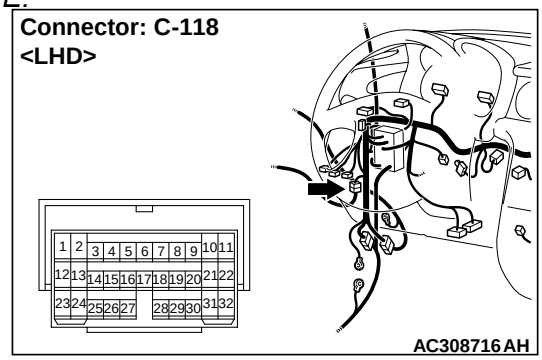

Prior to the wiring harness inspection, check intermediate connectors C-118 and E-12, and repair if necessary.

- Check the earth wires for open circuit.

Q: Is the check result normal?
YES : The trouble can be an intermittent malfunction (Refer to GROUP 00, How to Cope with Intermittent Malfunction P.00-6).
NO : Repair the wiring harness.

Step 5. Measure the voltage at the E-05 power window main switch connector.

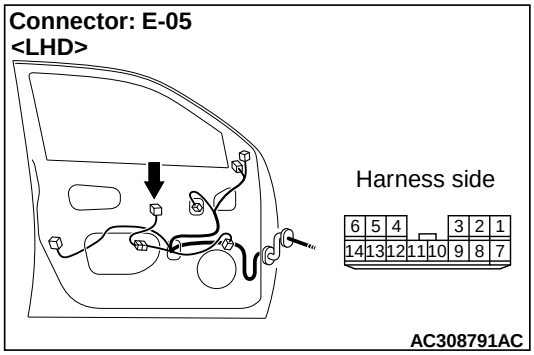

(1) Disconnect the connector, and measure at the wiring harness side.
(2) Turn the ignition switch to the ON position.

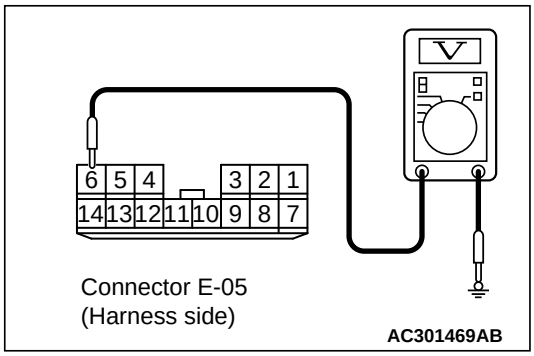

(3) Voltage between terminal 6 and body earth

OK: System voltage

Q: Is the check result normal?
YES : Go to Step 8.
NO : Go to Step 6.

Step 6. Connector check: C-208 power window relay connector

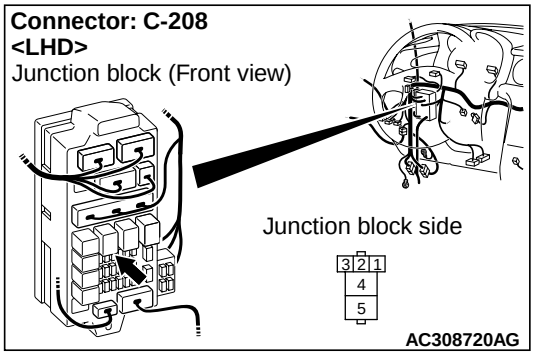

Q: Is the check result normal?
YES : Go to Step 7.
NO : Repair the connector.

Step 7. Check the wiring harness between C-208 power window relay connector terminal No.4 and E-05 power window main switch connector terminal No.6.

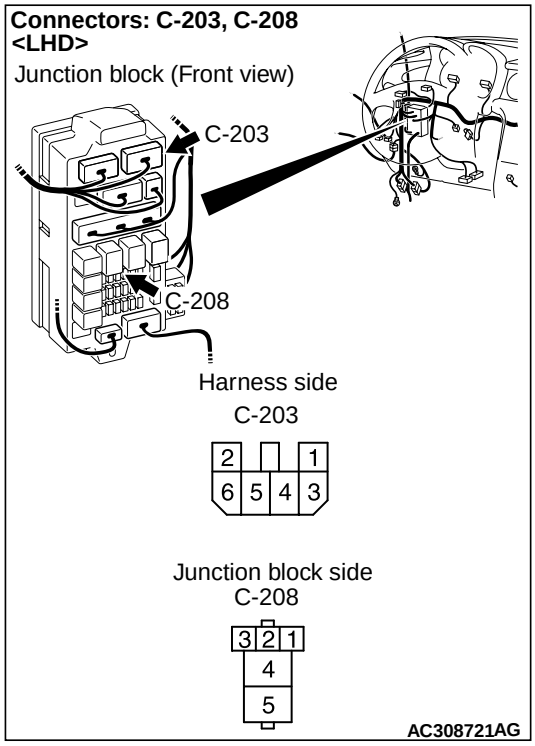

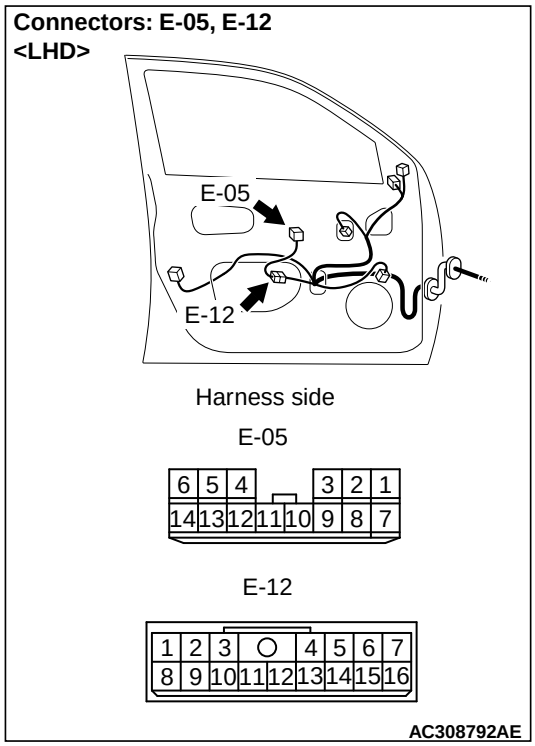

NOTE:

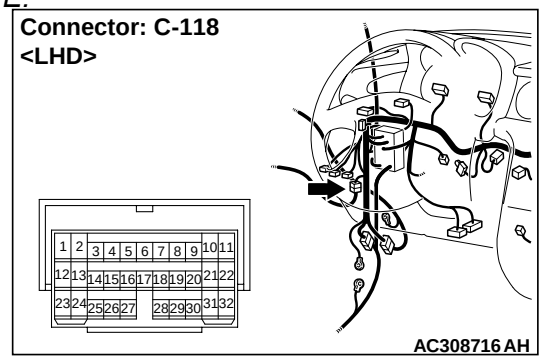

Prior to the wiring harness inspection, check intermediate connectors C-118, E-12 and junction block connector C-203, and repair if necessary.

- Check the power supply line for open circuit.

Q: Is the check result normal?

YES : The trouble can be an intermittent malfunction (Refer to GROUP 00, How to Cope with Intermittent Malfunction P.00-6).

NO : Repair the harness wire, and then go to Step 7.

Step 8. Connector check: E-13 power window motor (front LH) connector

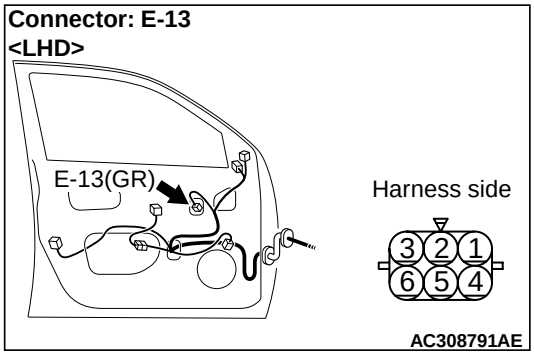

Q: Is the check result normal?

YES : Go to Step 9.

NO : Repair the connector.

Step 9. Check the wiring harness from E-13 power window motor (front LH) connector terminal Nos. 1 and 3 to E-05 power window main switch connector terminal Nos. 7 and 1.

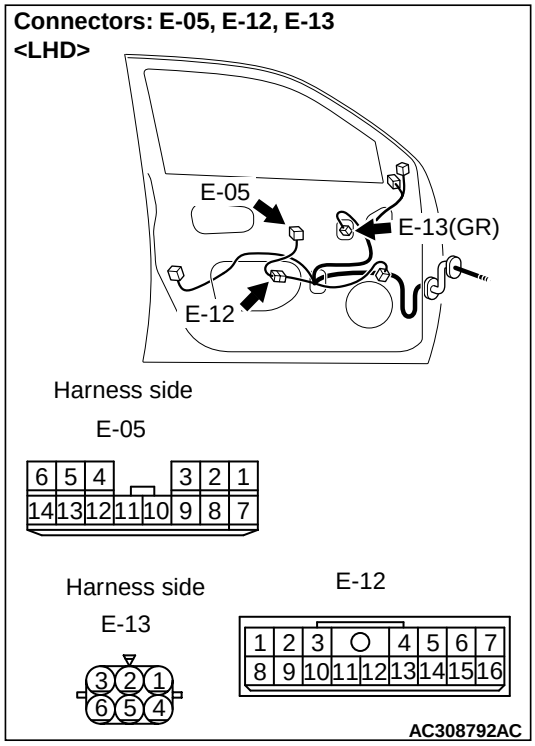

NOTE: Prior to the wiring harness inspection, check intermediate connector E-12, and repair if necessary.

- Check the input and output lines for open or short circuit.

Q: Is the check result normal?

YES : Go to Step 10.

NO : Repair the wiring harness.

Step 10. Retest the system.

After the power window main switch is replaced, check that the driver's door power window can be operated by the power window main switch.

(1) Replace the power window main switch.

(2) Check that the driver's power window works by means of the power window main switch.

Q: Is the check result normal?

YES : The trouble can be an intermittent malfunction (Refer to GROUP 00 – How to Cope with Intermittent Malfunction P.00-6).

NO : Replace the power window motor assembly (front LH).

INSPECTION PROCEDURE D-2: Driver's power window does not work by means of the power window main switch. <R.H. drive vehicles>

Power Window (front: RH) Circuit <RHD>

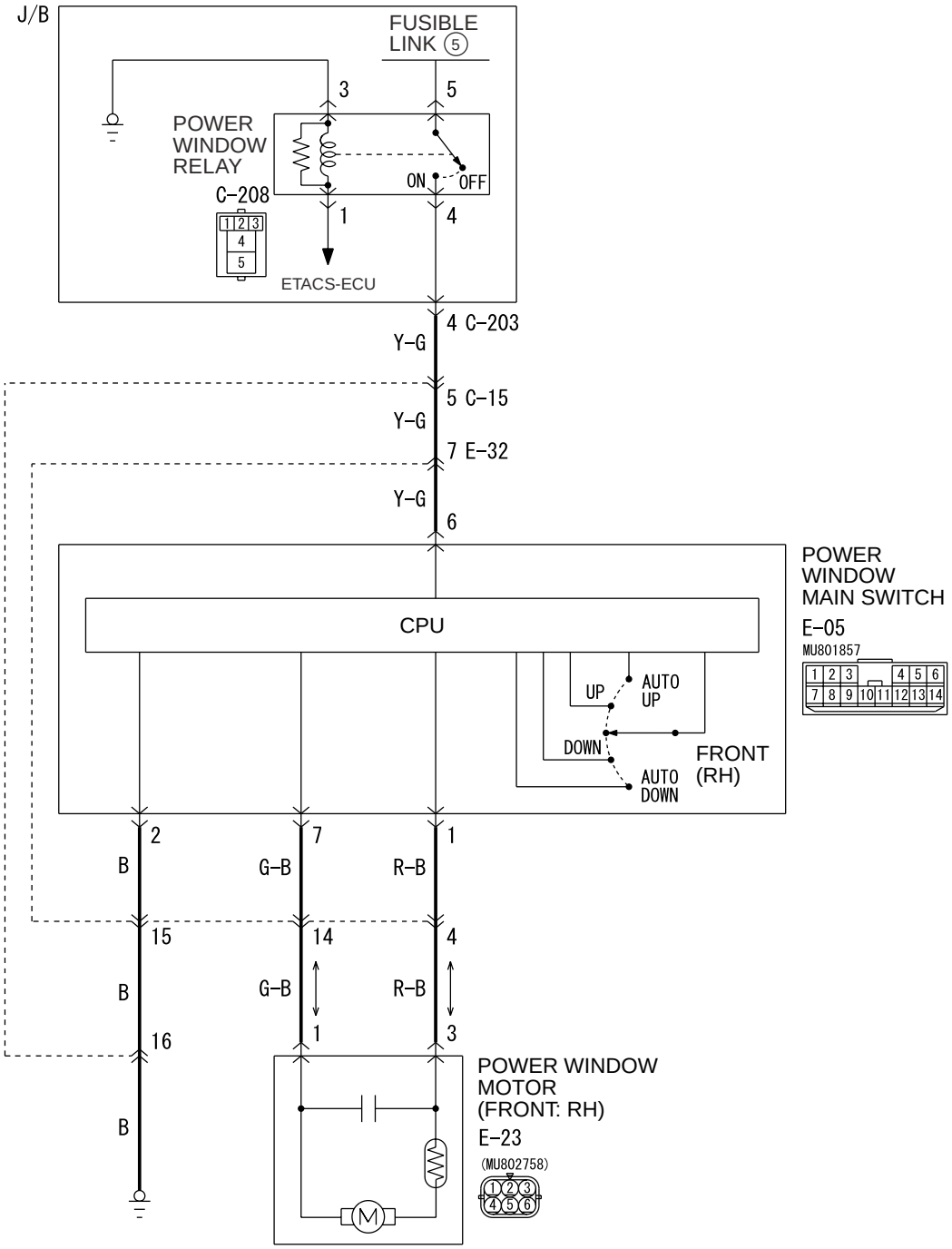

Wire colour code
B : Black LG : Light green G : Green L : Blue W : White Y : Yellow SB : Sky blue
BR : Brown O : Orange GR : Gray R : Red P : Pink V : Violet

W4Z54E13AA

COMMENTS ON TROUBLE SYMPTOM

If the driver's power window does not work by means of the power window main switch, the power window main switch or the driver's door power window motor may be defective.

POSSIBLE CAUSES

- Malfunction of the power window main switch
- Malfunction of the front power window motor (LH)
- Damaged harness wires and connectors

DIAGNOSIS PROCEDURE

Step 1. Check the power window main switch.

Check that all of the front passenger's and rear door power windows can operate by means of the power window main switch.

Q: Is the check result normal?

YES : Go to Step 2.

NO : Refer to Inspection Procedure D-1 "Power windows do not work at all P.54B-86."

Step 2. Connector check: E-05 power window main switch connector

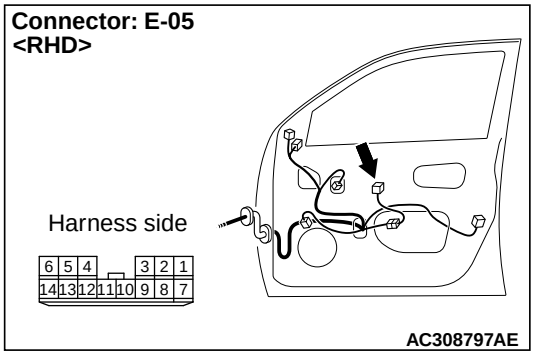

Q: Is the check result normal?

YES : Go to Step 3.

NO : Repair the connector.

Step 3. Resistance measurement at the E-05 power window main switch connector

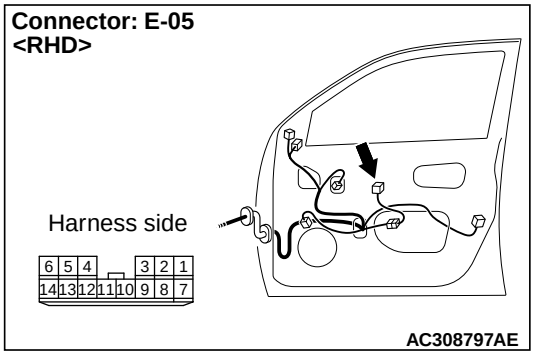

(1) Disconnect the connector, and measure at the wiring harness side.

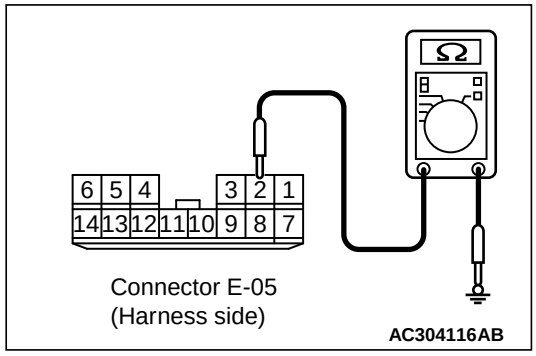

Step 4. Check the wiring harness between E-05 power window main switch connector terminal No.2 and body earth.

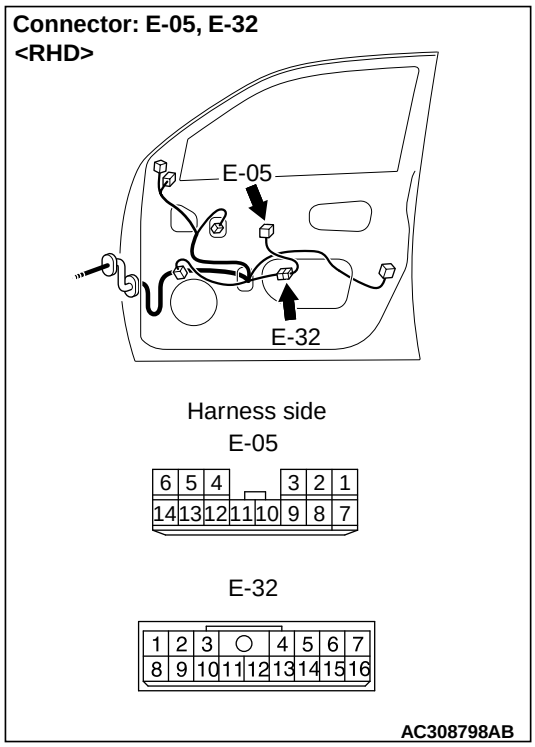

NOTE:

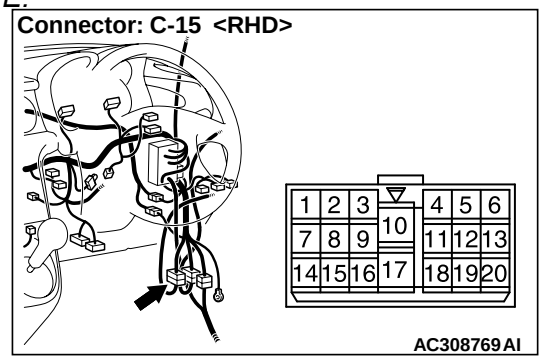

Prior to the wiring harness inspection, check intermediate connectors C-15 and E-32, and repair if necessary.

- Check the earth wires for open circuit.

Q: Is the check result normal?
YES : The trouble can be an intermittent malfunction (Refer to GROUP 00, How to Cope with Intermittent Malfunction P.00-6).
NO : Repair the wiring harness.

Step 5. Voltage measurement at the E-05 power window main switch connector

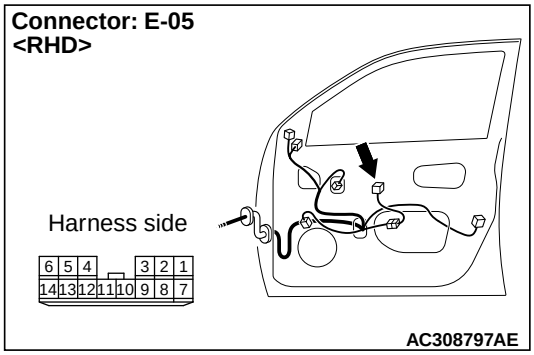

(1) Disconnect the connector, and measure at the wiring harness side.
(2) Turn the ignition switch to the ON position.

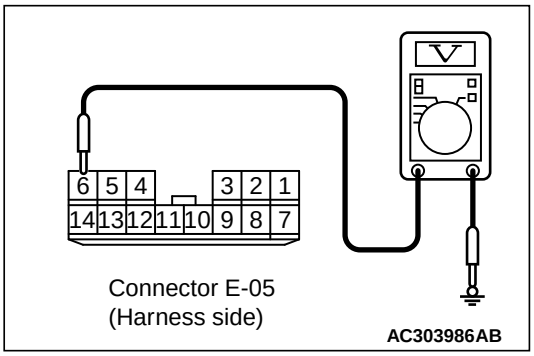

(3) Voltage between terminal 6 and body earth

OK: System voltage

Q: Is the check result normal?
YES : Go to Step 8.
NO : Go to Step 6.

Step 6. Connector check: C-208 power window relay connector

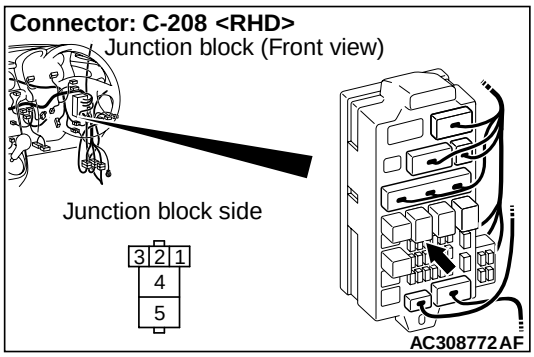

Q: Is the check result normal?
YES : Go to Step 7.
NO : Repair the connector.

Step 7. Check the wiring harness between C-208 power window relay connector terminal No.4 and E-05 power window main switch connector terminal No.6.

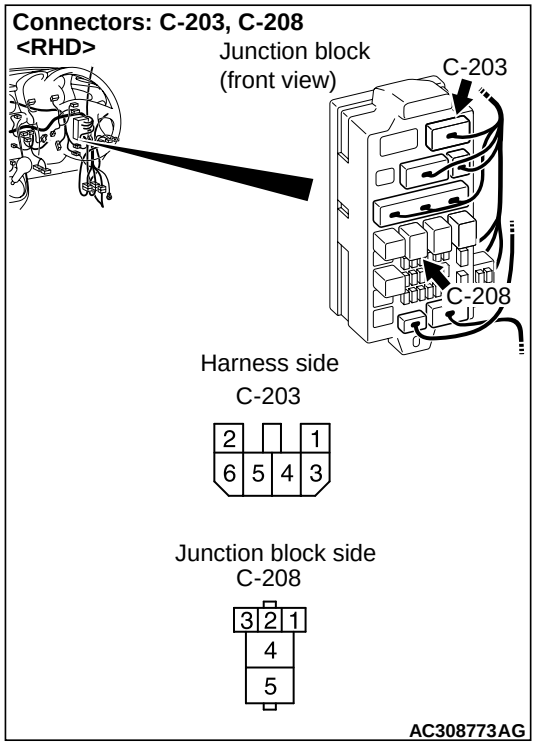

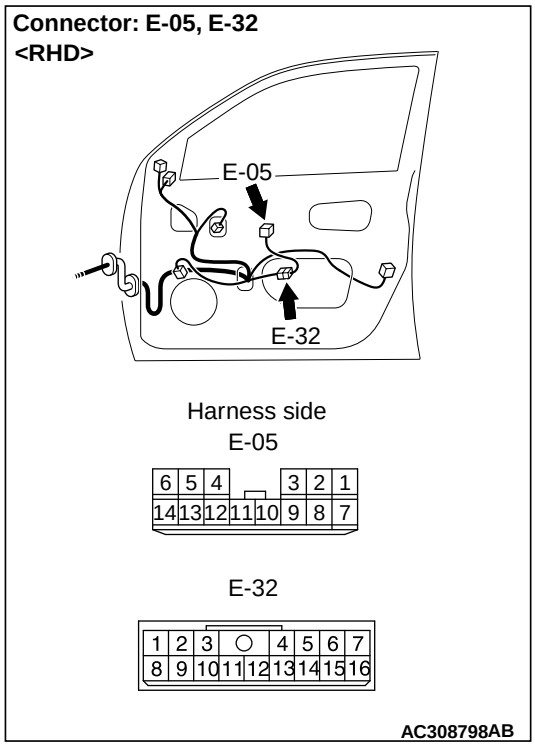

NOTE:

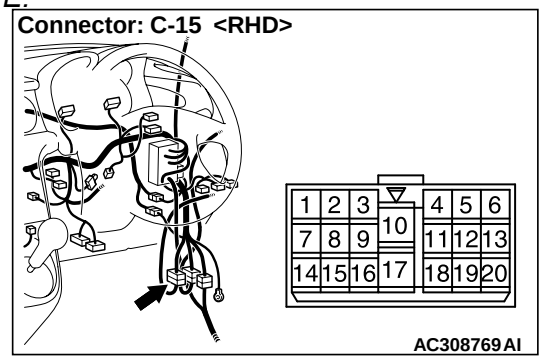

Prior to the wiring harness inspection, check intermediate connectors C-15, E-32 and junction block connector C-203, and repair if necessary.

- Check the power supply line for open circuit.

Q: Is the check result normal?

YES : The trouble can be an intermittent malfunction (Refer to GROUP 00, How to Cope with Intermittent Malfunction P.00-6).

NO : Repair the harness wire, and then go to Step 7.

Step 8. Connector check: E-23 front power window motor (RH) connector

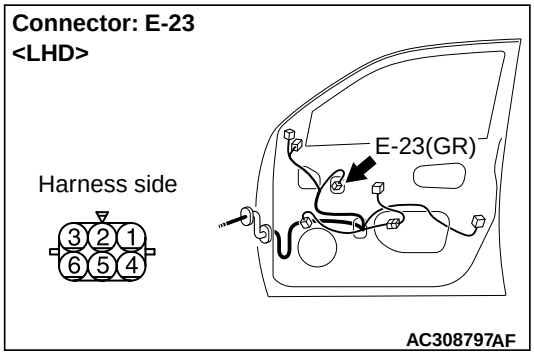

Q: Is the check result normal?

YES : Go to Step 9.

NO : Repair the connector.

Step 9. Check the wiring harness from E-23 front power window motor (RH) connector terminal Nos. 1 and 3 to E-05 power window main switch connector terminal Nos. 7 and 1.

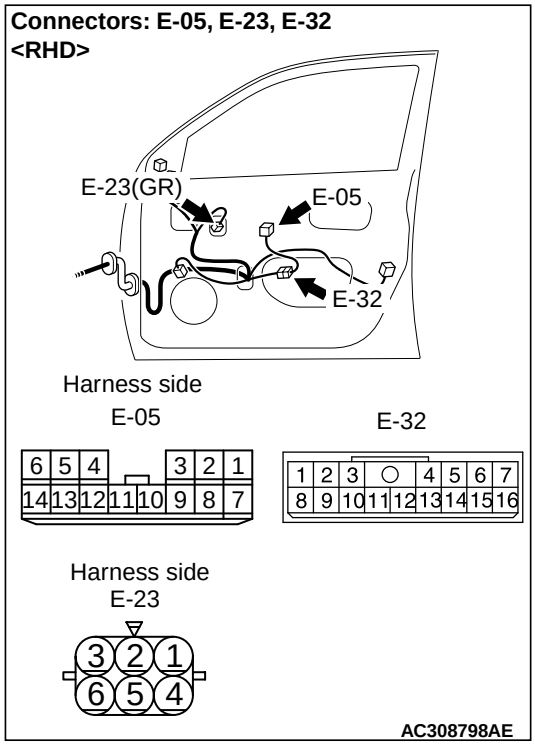

NOTE: Prior to the wiring harness inspection, check intermediate connector E-32, and repair if necessary.

- Check the input and output lines for open or short circuit.

Q: Is the check result normal?

YES : Go to Step 10.

NO : Repair the wiring harness.

Step 10. Retest the system.

After the power window main switch is replaced, check that the driver's door power window can be operated by the power window main switch.

(1) Replace the power window main switch.

(2) Check that the driver's power window works by means of the power window main switch.

Q: Is the check result normal?

YES : The trouble can be an intermittent malfunction (Refer to GROUP 00 – How to Cope with Intermittent Malfunction P.00-6).

NO : Replace the front power window motor assembly (LH).

INSPECTION PROCEDURE D-3: Relevant power window(s) do not work by means of the front and rear passenger's power window sub switches.

Power Window (front: RH) Circuit <LHD>

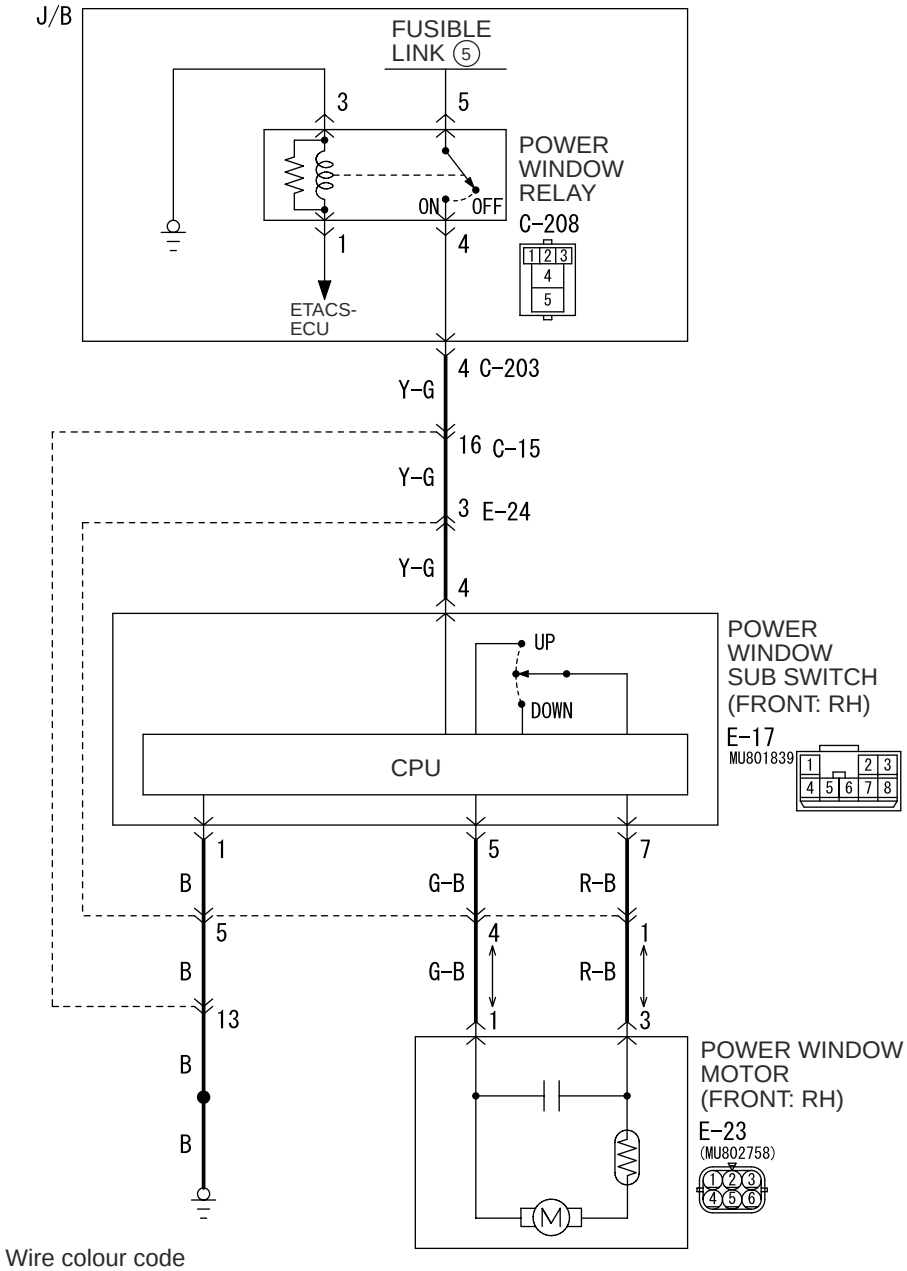

Wire colour code
B : Black LG : Light green G : Green L : Blue W : White Y : Yellow SB : Sky blue
BR : Brown O : Orange GR : Gray R : Red P : Pink V : Violet

W3Z17E01AB

Power Window (front: LH) Circuit <RHD>

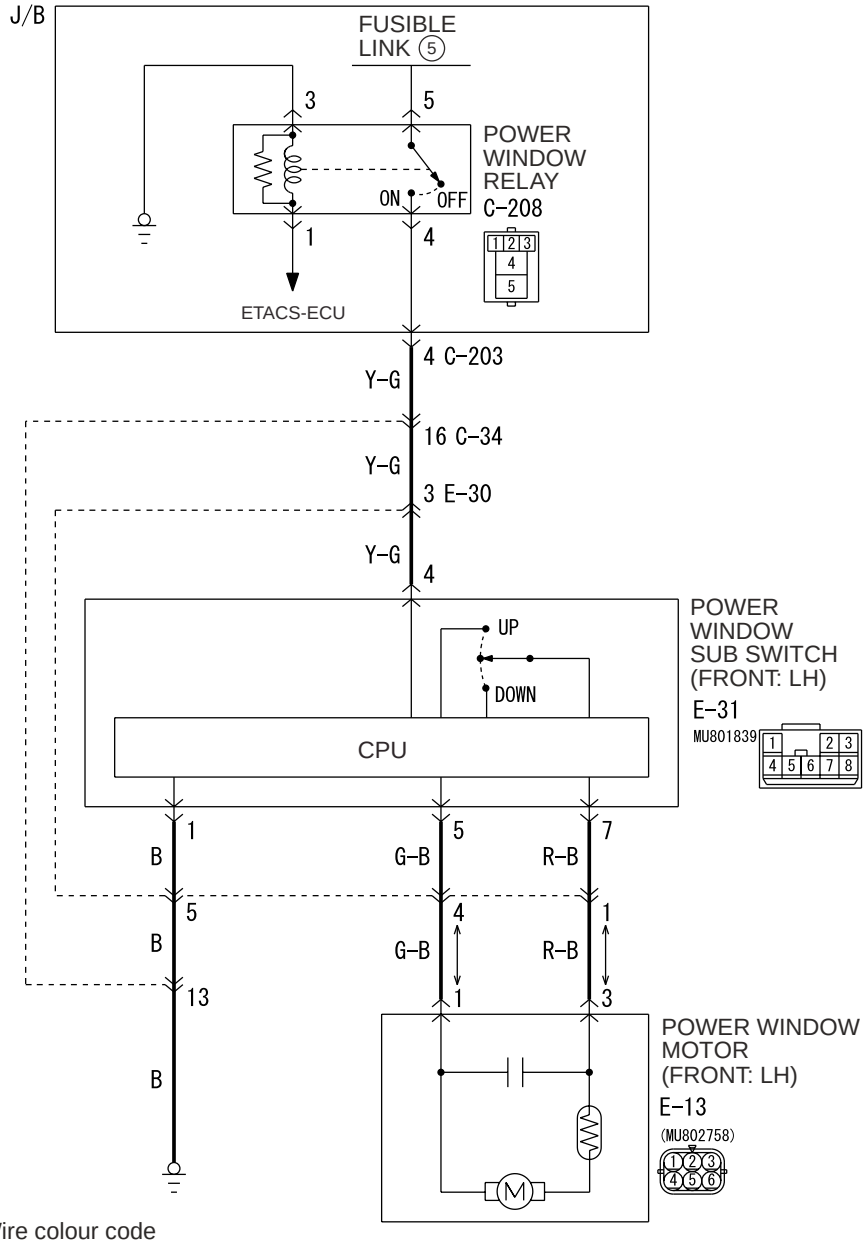

Wire colour code
B : Black LG : Light green G : Green L : Blue W : White Y : Yellow SB : Sky blue
BR : Brown O : Orange GR : Gray R : Red P : Pink V : Violet

W4Z54E14AA

Power Window (rear) Circuit

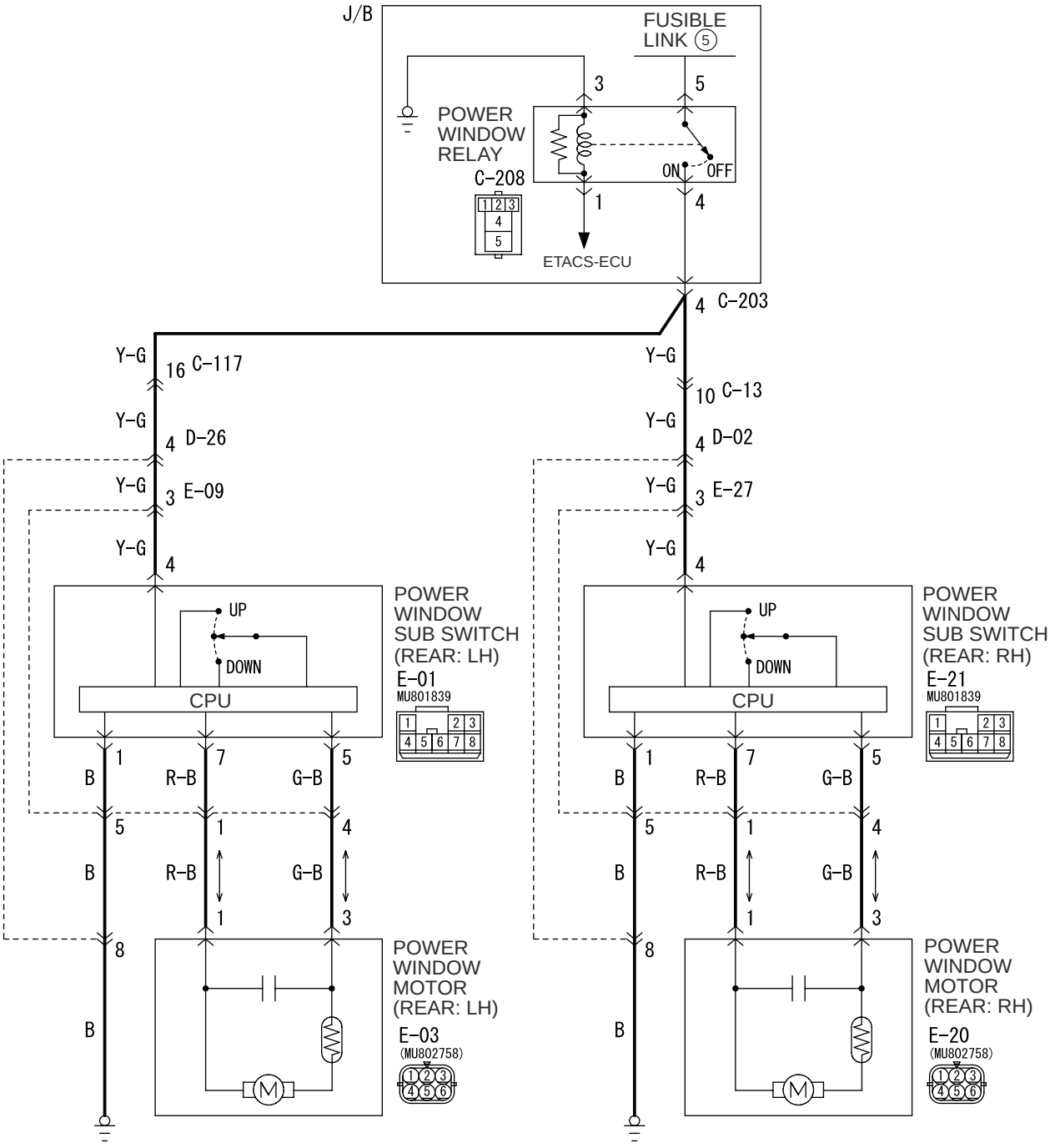

Wire colour code
B : Black LG : Light green G : Green L : Blue W : White Y : Yellow SB : Sky blue
BR : Brown O : Orange GR : Gray R : Red P : Pink V : Violet

W3Z17E02AA

COMMENTS ON TROUBLE SYMPTOM

If the front passenger's or rear power window does not work by means of the respective power window sub switch, the power window sub switch or the power window motor may be defective.

POSSIBLE CAUSES

- Malfunction of the power window sub switch (front, RH), power window sub switch (rear, RH) or power window sub switch (rear, LH)
- Malfunction of the power window motor (front, RH), power window motor (rear, RH) or power window motor (rear, LH)
- Damaged harness wires and connectors

DIAGNOSIS PROCEDURE

Step 1. Check the power window main switch.
Check that the power window lock switch is turned off.

Q: Is the check result normal?
YES : Go to Step 2.
NO : Turn off the power window lock switch.

Step 2. Determine a trouble spot.

Q: Which power window does not work?
Front passenger's door : Go to Step 3.
Rear right door : Go to Step 12.
Rear left door : Go to Step 21.

Step 3. Connector check: E-17 power window sub switch (front RH) connector <L.H. drive vehicles> or E-31 power window sub switch (front LH) connector <R.H. drive vehicles>

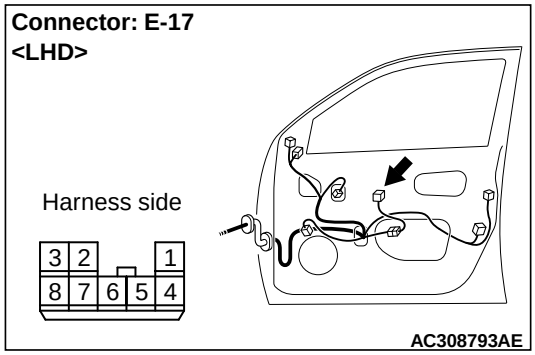

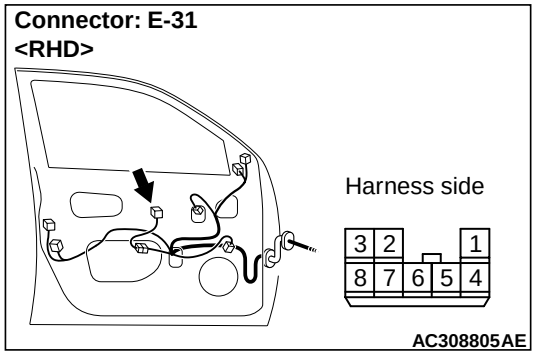

Q: Is the check result normal?
YES : Go to Step 4.
NO : Repair the connector.

Step 4. Measure the resistance at E-17 power window sub switch (front RH) connector <L.H. drive vehicles> or E-31 power window sub switch (front LH) connector <R.H. drive vehicles>.

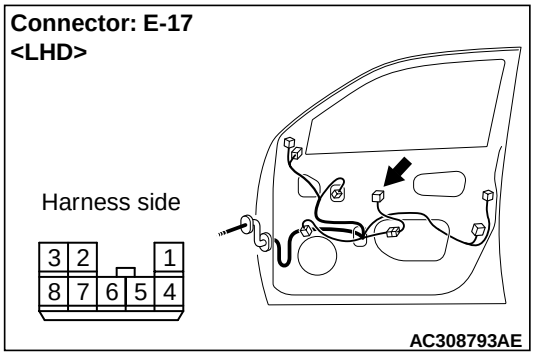

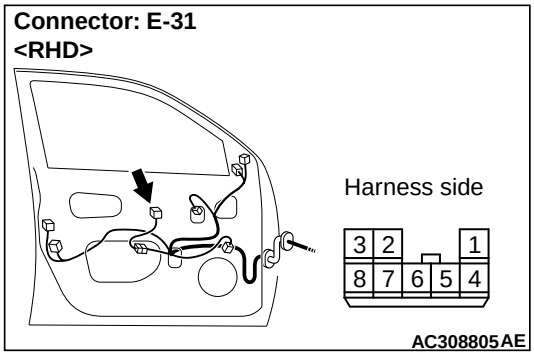

(1) Disconnect the connector, and measure at the wiring harness side.

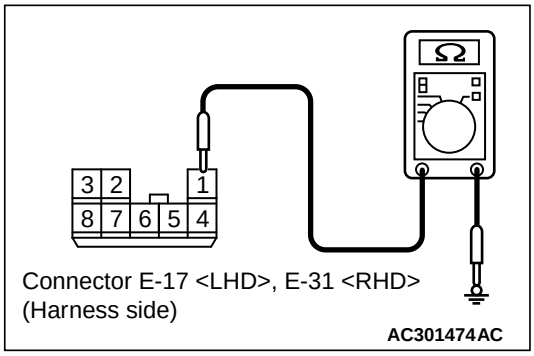

(2) Resistance between terminal 1 and body earth
OK: 2Ω or less

Q: Is the check result normal?
YES : Go to Step 6.
NO : Go to Step 5.

Step 5. Check the wiring harness from E-17 power window sub switch (front RH) connector <L.H. drive vehicles> or E-31 power window sub switch (front LH) connector <R.H. drive vehicles> terminal No.1 to body earth.

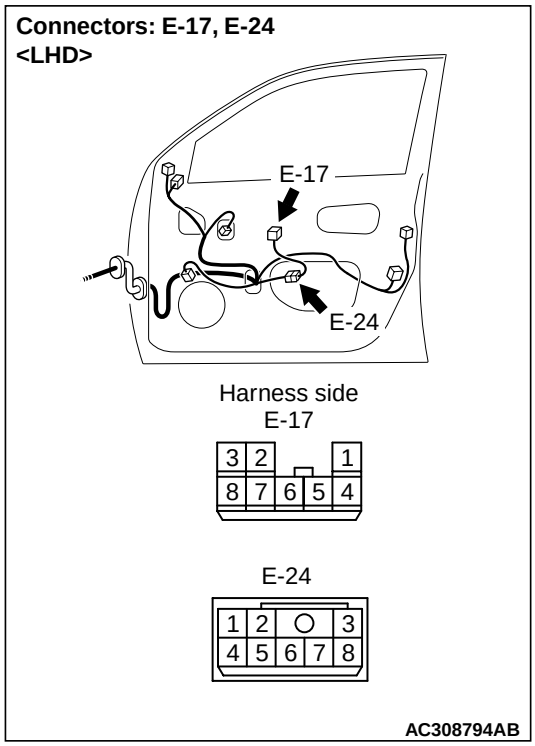

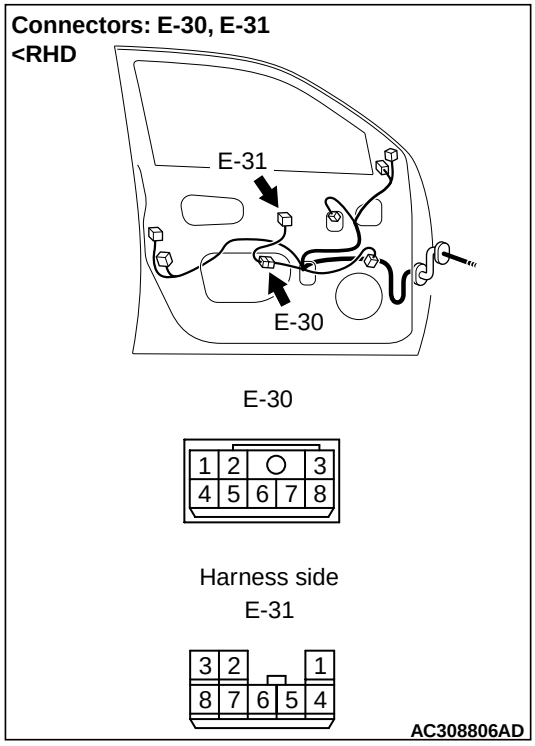

NOTE:

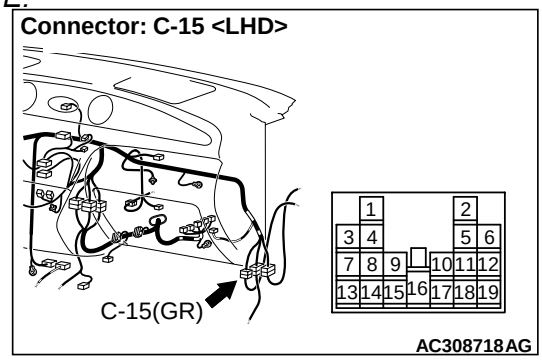

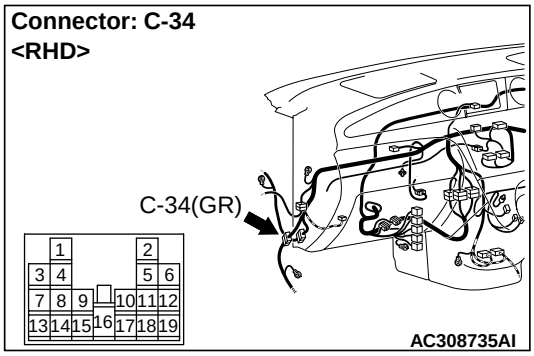

Prior to the wiring harness inspection, check intermediate connector C-15 <L.H. drive vehicles>, C-34 <R.H. drive vehicles>, E-24 <L.H. drive vehicles> and E-30 <R.H. drive vehicles>, and repair if necessary.

- Check the earth wires for open circuit.

Q: Is the check result normal?

YES : The trouble can be an intermittent malfunction (Refer to GROUP 00, How to Cope with Intermittent Malfunction P.00-6).

NO : Repair the wiring harness.

Step 6. Measure the voltage at E-17 power window sub switch (front RH) connector <L.H. drive vehicles> or E-31 power window sub switch (front LH) connector <R.H. drive vehicles>.

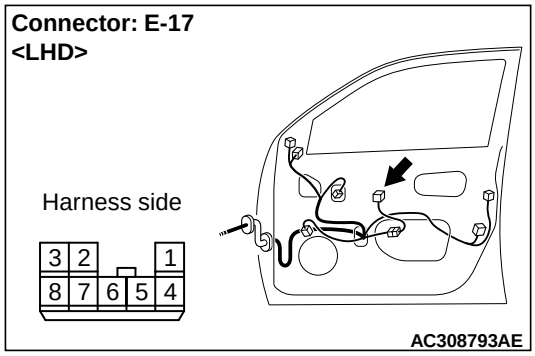

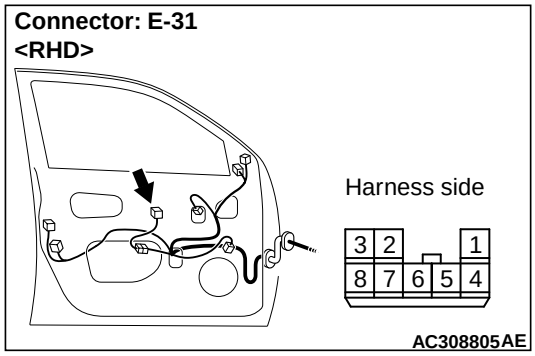

(1) Disconnect the connector, and measure at the wiring harness side.
(2) Turn the ignition switch to the ON position.

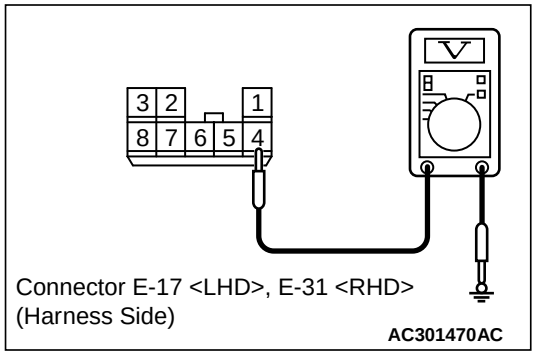

(3) Voltage between terminal 4 and body earth

OK: System voltage

Q: Is the check result normal?
YES : Go to Step 9.
NO : Go to Step 7.

Step 7. Connector check: C-208 power window relay connector

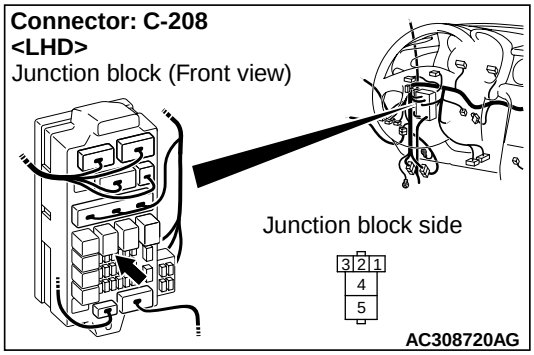

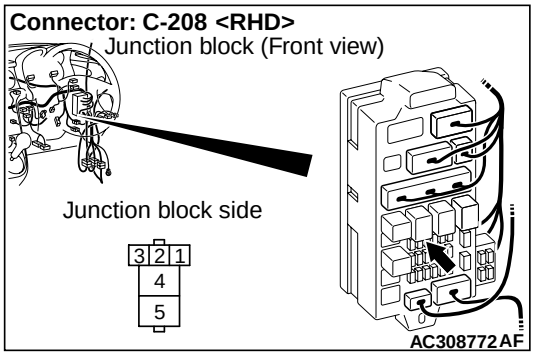

Q: Is the check result normal?
YES : Go to Step 8.
NO : Repair the connector.

Step 8. Check the wiring harness from E-17 power window sub switch (front RH) connector <L.H. drive vehicles> or E-31 power window sub switch (front LH) connector <R.H. drive vehicles> terminal No.4 to C-208 power window relay connector terminal No.4.

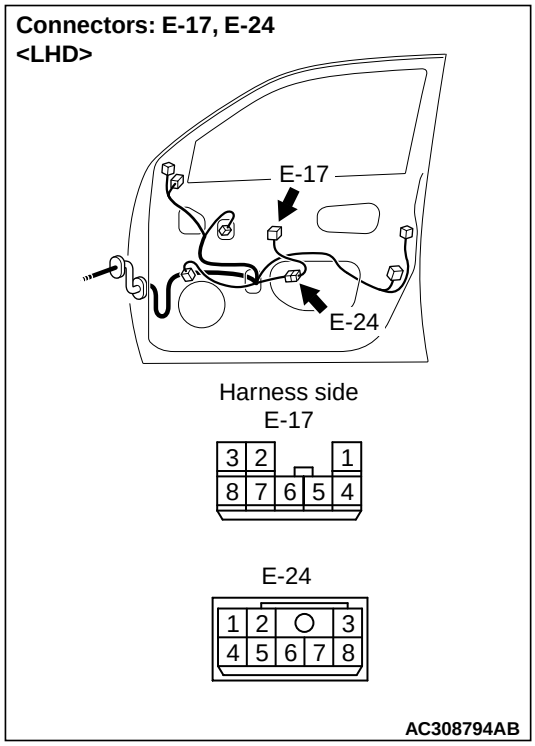

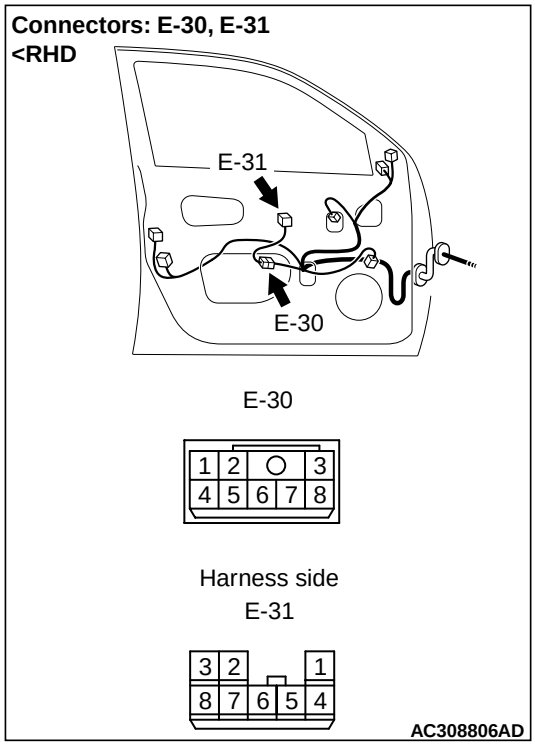

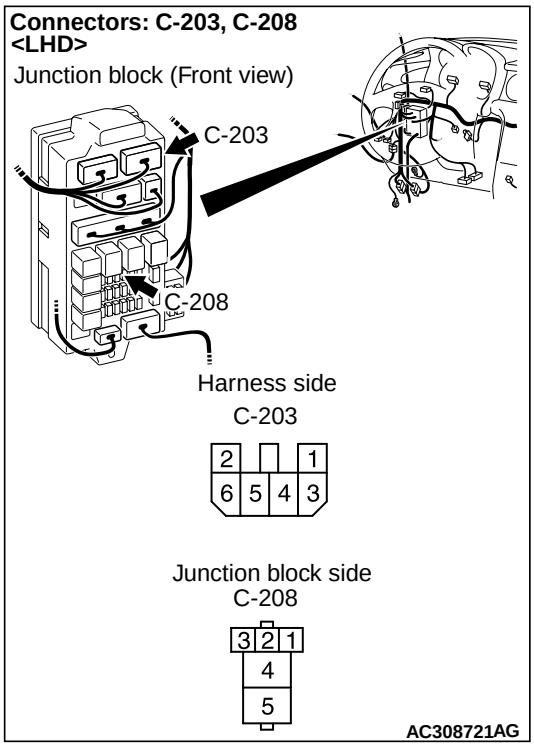

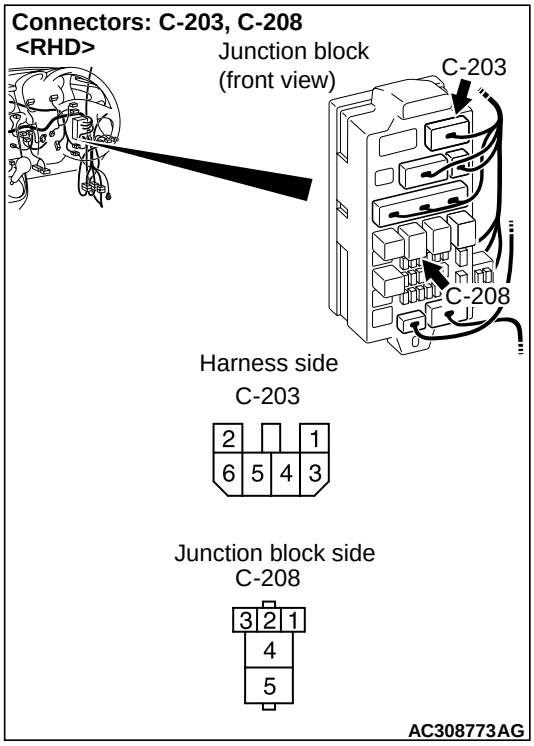

NOTE:

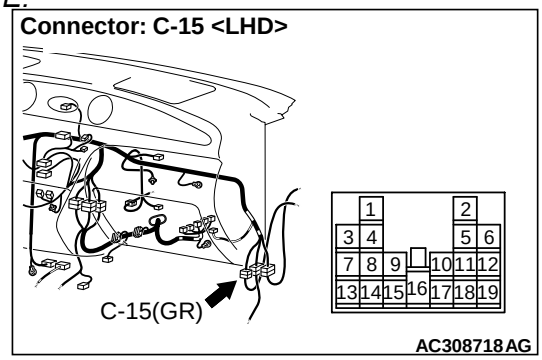

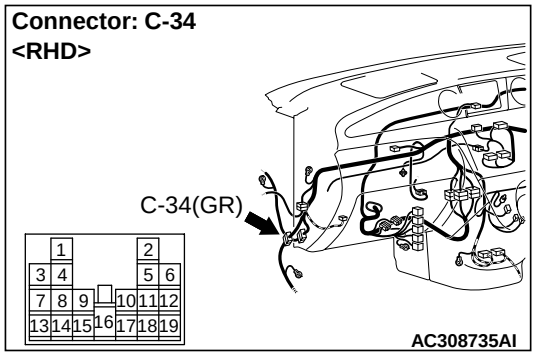

Prior to the wiring harness inspection, check intermediate connectors C-15 <L.H. drive vehicles>, C-34<R.H. drive vehicles>, E-24 <L.H. drive vehicles> and E-30 <R.H. drive vehicles>, and junction block connector C-203, and repair if necessary.

- Check the power supply line for open circuit.

Q: Is the check result normal?

YES : The trouble can be an intermittent malfunction (Refer to GROUP 00, How to Cope with Intermittent Malfunction P.00-6).

NO : Repair the wiring harness.

Step 9. Connector check: E-23 power window motor (front RH) connector <L.H. drive vehicles> or E-13 power window motor (front LH) connector <R.H. drive vehicles>

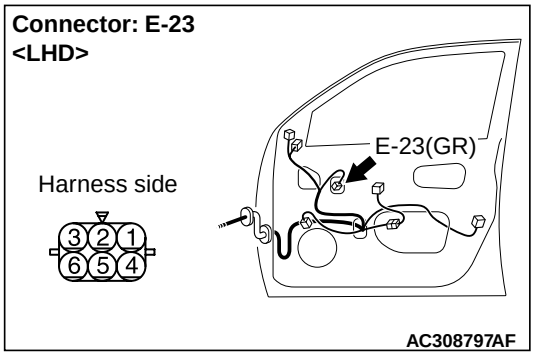

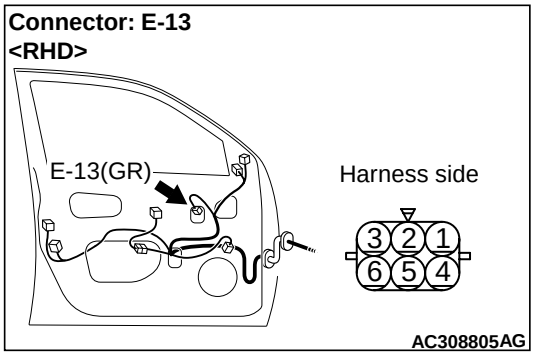

Q: Is the check result normal?

YES : Go to Step 10.

NO : Repair the connector.

Step 10. Check the wiring harness from E-23 power window motor (front RH) connector <L.H. drive vehicles> or E-13 power window motor (front LH) connector <R.H. drive vehicles> terminal Nos. 1 and 3 to E-17 <L.H. drive vehicles> power window sub switch (front LH) connector or E-31 <R.H. drive vehicles> power window sub switch (front RH) connector terminal Nos. 5 and 7.

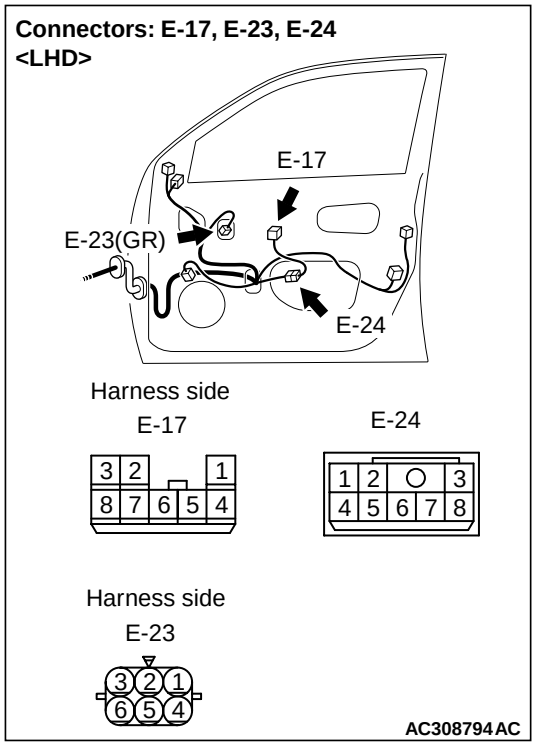

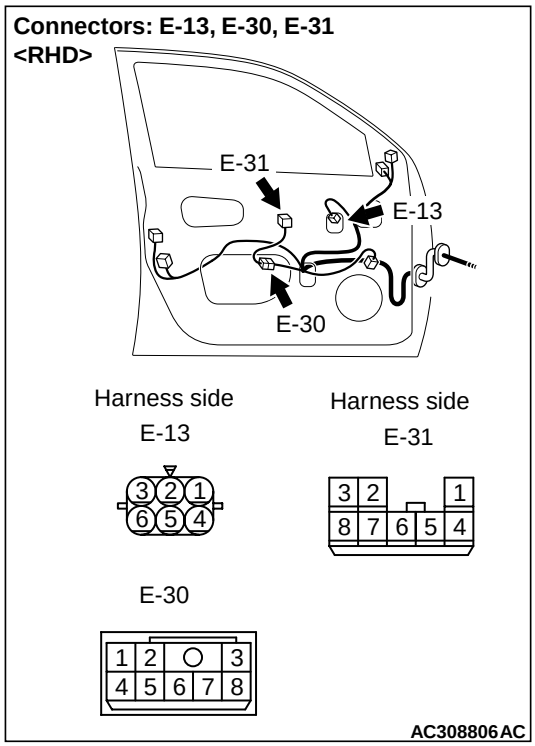

NOTE: Prior to the wiring harness inspection, check intermediate connector E-24 <L.H. drive vehicles> or E-30 <R.H. drive vehicles>, and repair if necessary.

- Check the input and output lines for open or short circuit.

Q: Is the check result normal?
YES : Go to Step 11.
NO : Repair the wiring harness.

Step 11. Retest the system.
After the power window sub switch (front RH) is replaced, check that the front passenger's door power window can be operated by the power window sub switch (front RH).

(1) Replace the power window sub switch (front RH).
(2) Check that the front passenger's door power window can be operated by the power window sub switch (front RH).

Q: Is the check result normal?
YES : The trouble can be an intermittent malfunction (Refer to GROUP 00 – How to Cope with Intermittent Malfunction P.00-6).
NO : Replace the power window motor assembly (front RH).

Step 12. Connector check: E-21 power window sub switch (rear RH) connector

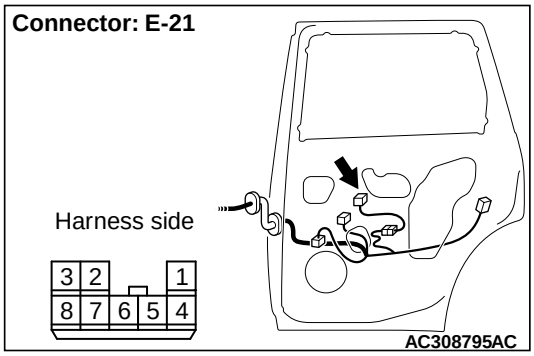

Q: Is the check result normal?
YES : Go to Step 13.
NO : Repair the connector.

Step 13. Measure the resistance at E-21 power window sub switch (rear RH) connector.

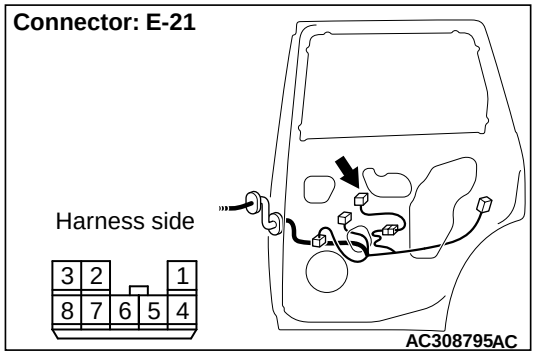

(1) Disconnect the connector, and measure at the wiring harness side.

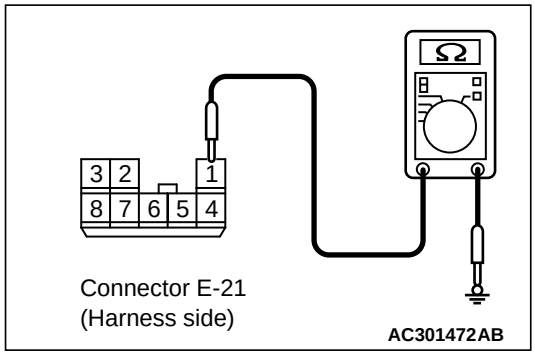

(2) Resistance between terminal 1 and body earth

OK: 2Ω or less

Q: Is the check result normal?

YES : Go to Step 15.

NO : Go to Step 14.

Step 14. Check the wiring harness from E-21 power window sub switch (rear RH) connector terminal No.1 to body earth.

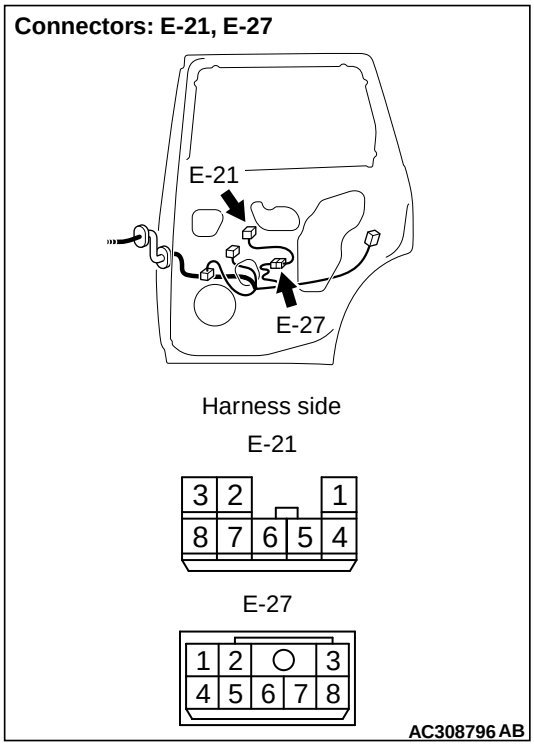

NOTE:

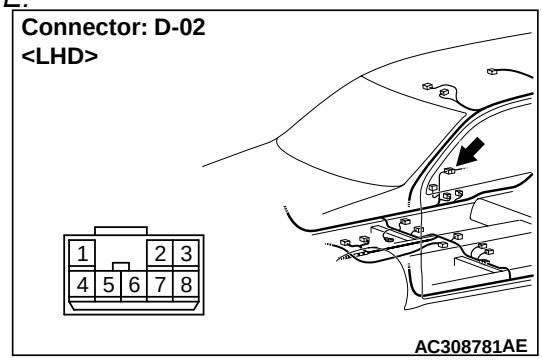

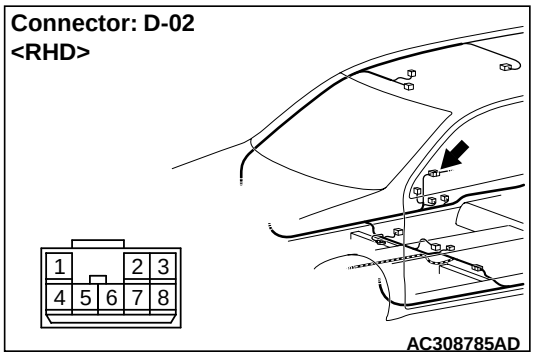

Prior to the wiring harness inspection, check intermediate connectors E-27 and D-02, and repair if necessary.

- Check the earth wires for open circuit.

Q: Is the check result normal?
YES : The trouble can be an intermittent malfunction (Refer to GROUP 00, How to Cope with Intermittent Malfunction P.00-6).
NO : Repair the wiring harness.

Step 15. Measure the voltage at E-21 power window sub switch (rear RH) connector.

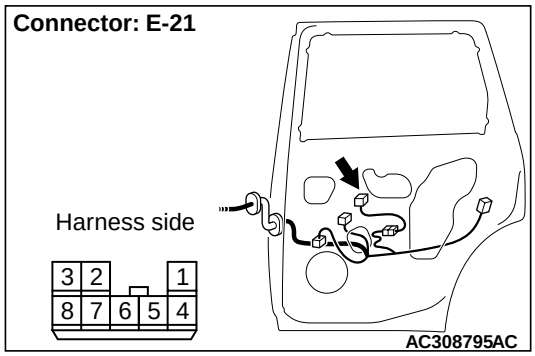

(1) Disconnect the connector, and measure at the wiring harness side.
(2) Turn the ignition switch to the ON position.

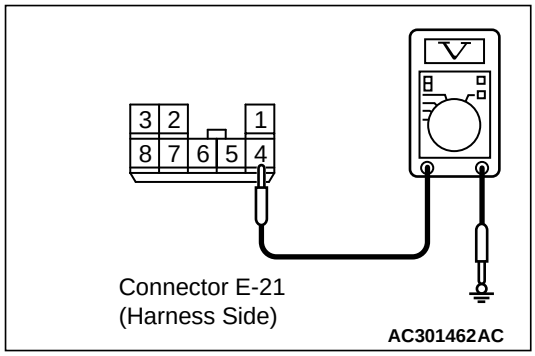

(3) Voltage between terminal 4 and body earth

OK: System voltage

Q: Is the check result normal?
YES : Go to Step 18.
NO : Go to Step 16.

Step 16. Connector check: C-208 power window relay connector

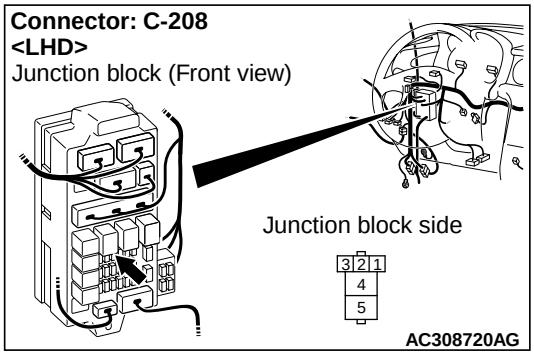

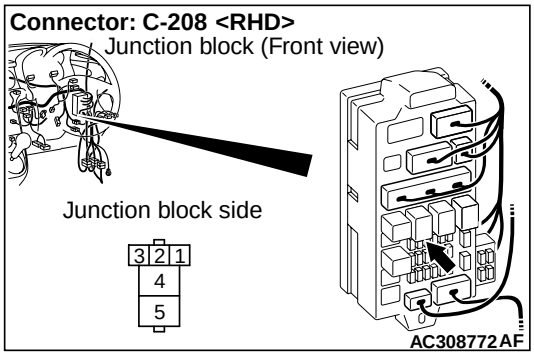

Q: Is the check result normal?
YES : Go to Step 17.
NO : Repair the connector.

Step 17. Check the wiring harness from E-21 power window sub switch (rear RH) connector terminal No.4 to C-208 power window connector terminal No.4.

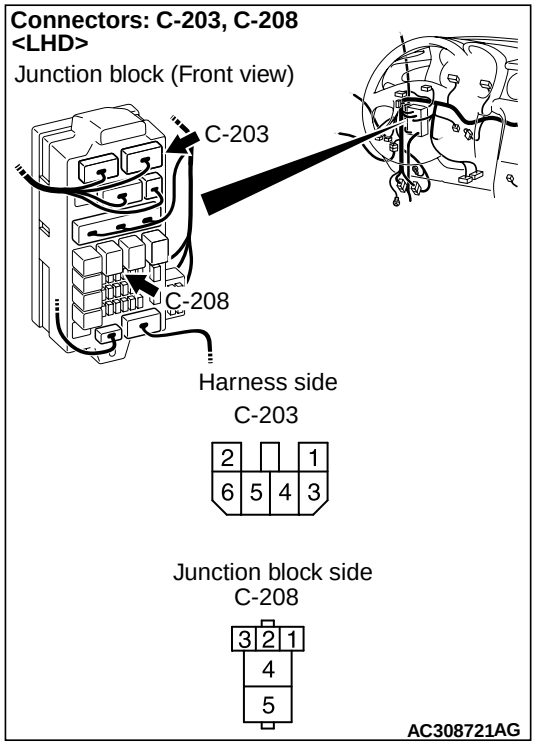

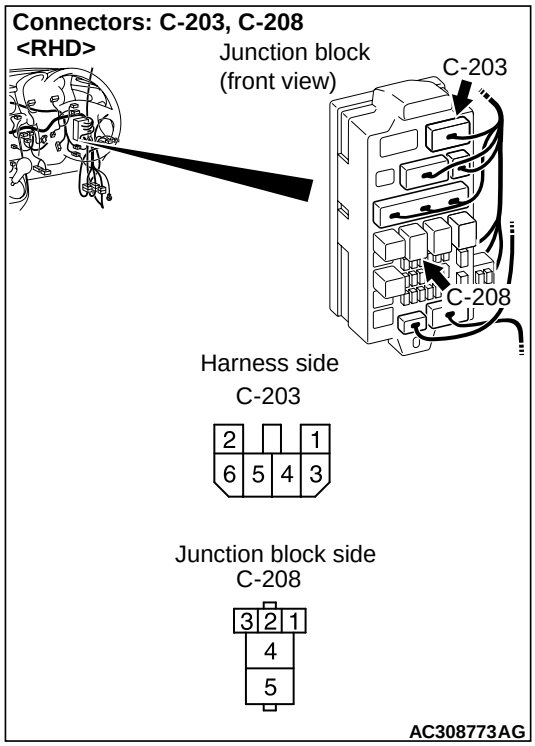

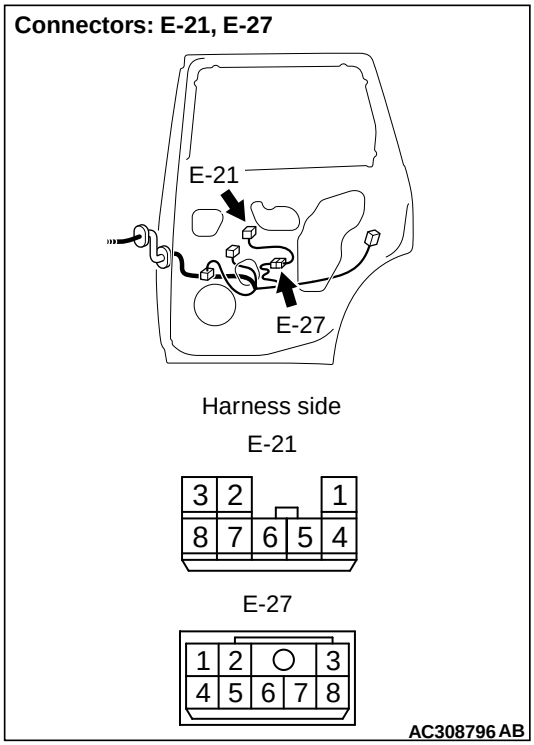

NOTE:

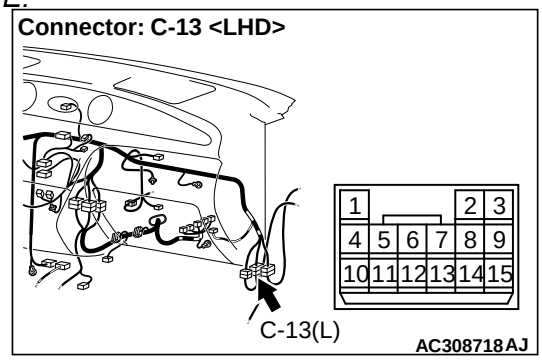

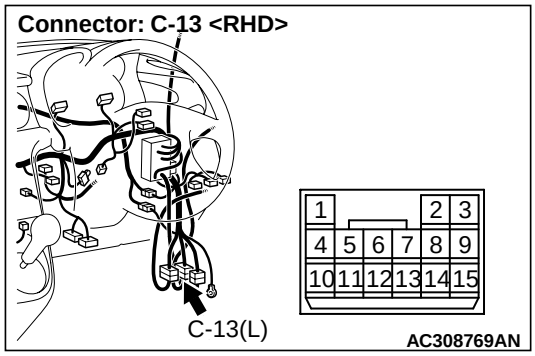

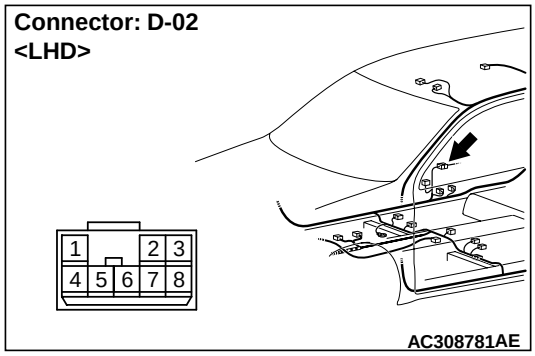

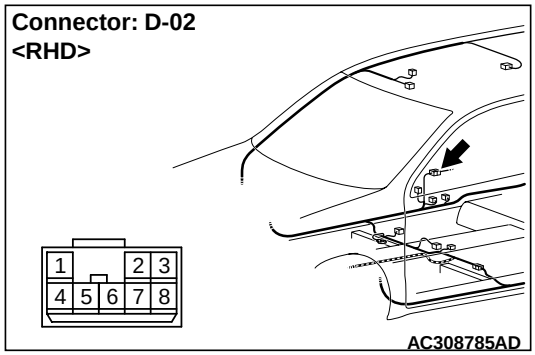

Prior to the wiring harness inspection, check intermediate connectors C-13, D-02, E-27 and junction block connector C-203, and repair if necessary.

- Check the power supply line for open circuit.

Q: Is the check result normal?

YES : The trouble can be an intermittent malfunction (Refer to GROUP 00, How to Cope with Intermittent Malfunction P.00-6).

NO : Repair the wiring harness.

Step 18. Connector check: E-20 power window motor (rear RH) connector

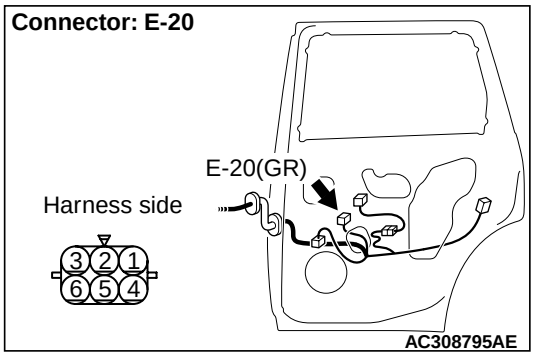

Q: Is the check result normal?

YES : Go to Step 19.

NO : Repair the connector.

Step 19. Check the wiring harness from E-20 power window motor (rear RH) connector terminal Nos. 1 and 3 to E-21 power window sub switch (rear RH) connector terminal Nos. 7 and 5.

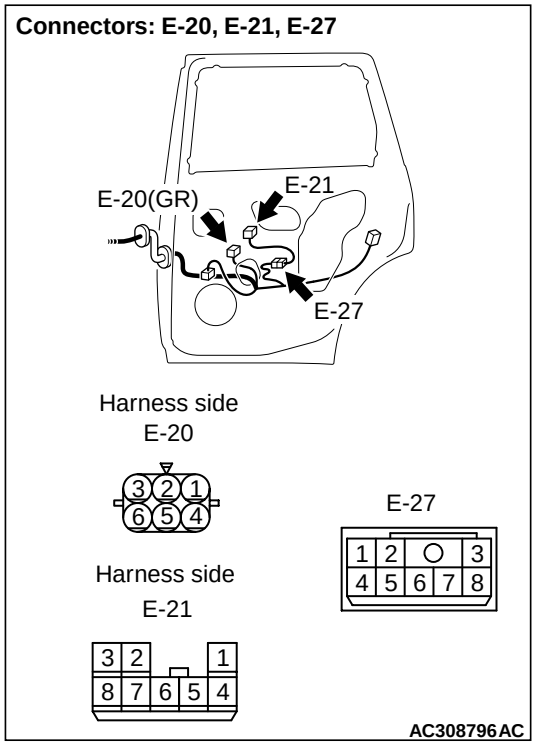

NOTE: Prior to the wiring harness inspection, check intermediate connector E-27, and repair if necessary.

- Check the input and output lines for open or short circuit.

Q: Is the check result normal?
YES : Go to Step 20.
NO : Repair the wiring harness.

Step 20. Retest the system.

After the power window sub switch (rear RH) is replaced, check that the rear right door power window can be operated by the power window sub switch (rear RH).

(1) Replace the power window sub switch (rear RH).
(2) Check that the rear right door power window can be operated by the power window sub switch (rear RH).

Q: Is the check result normal?
YES : The trouble can be an intermittent malfunction (Refer to GROUP 00 – How to Cope with Intermittent Malfunction P.00-6).
NO : Replace the power window motor assembly (rear RH).

Step 21. Connector check: E-01 power window sub switch (rear LH) connector

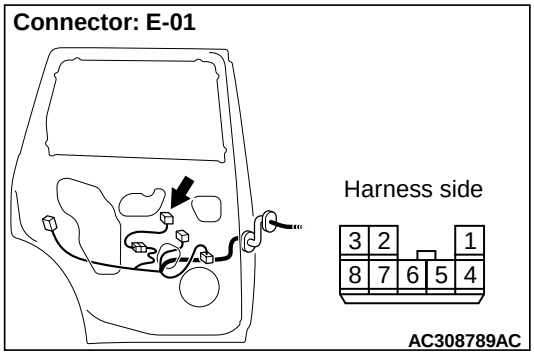

Q: Is the check result normal?
YES : Go to Step 22.
NO : Repair the connector.

Step 22. Measure the resistance at E-01 power window sub switch (rear LH) connector.

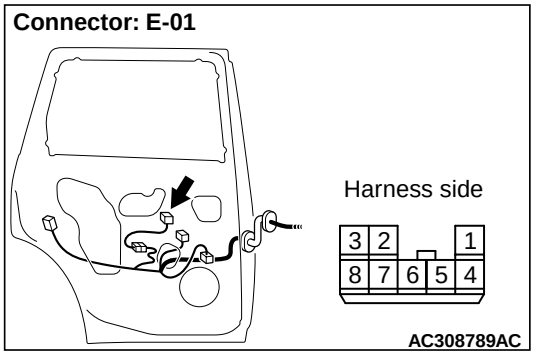

(1) Disconnect the connector, and measure at the wiring harness side.

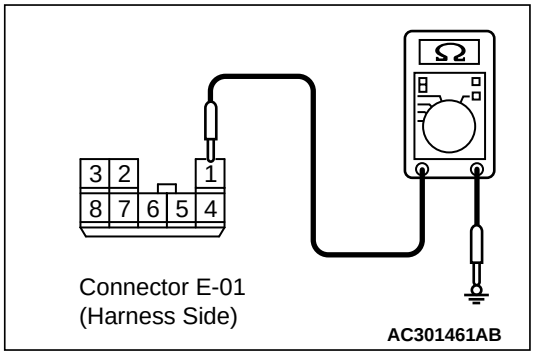

(2) Resistance between terminal 1 and body earth

OK: 2Ω or less

Q: Is the check result normal?
YES : Go to Step 24.
NO : Go to Step 23.

Step 23. Check the wiring harness from E-01 power window sub switch (rear LH) connector terminal No.1 to body earth.

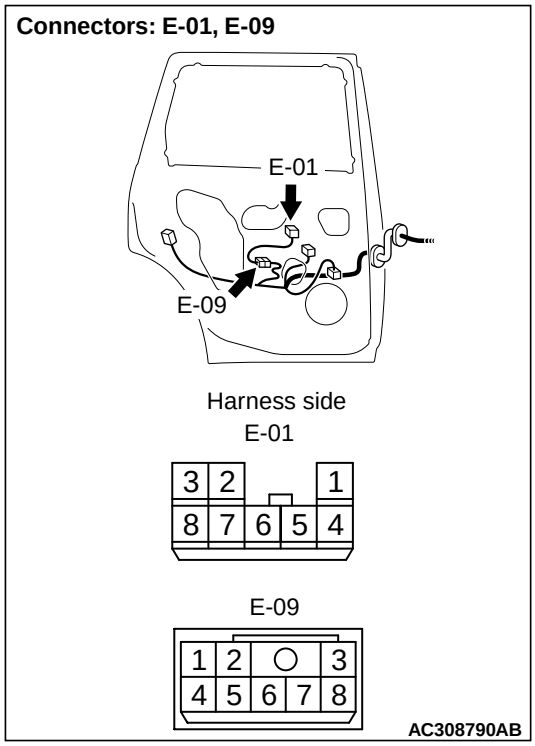

NOTE:

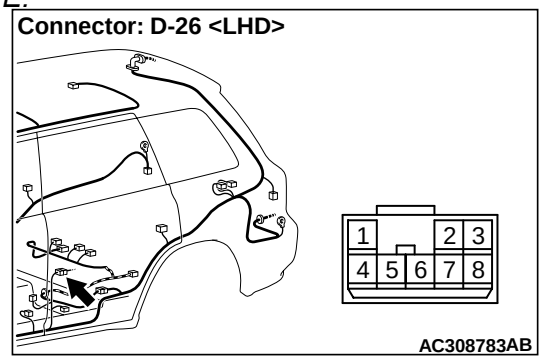

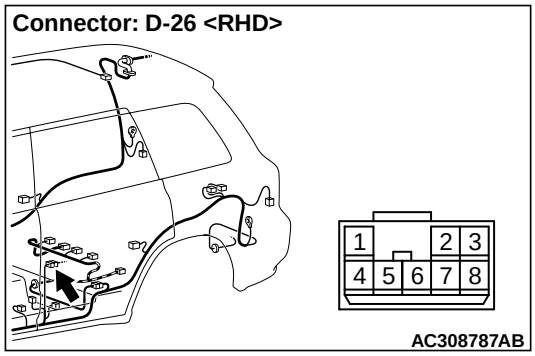

Prior to the wiring harness inspection, check intermediate connectors E-09 and D-26, and repair if necessary.

- Check the earth wires for open circuit.

Q: Is the check result normal?

YES : The trouble can be an intermittent malfunction (Refer to GROUP 00, How to Cope with Intermittent Malfunction P.00-6).

NO : Repair the wiring harness.

Step 24. Measure the voltage at E-01 power window sub switch (rear LH) connector.

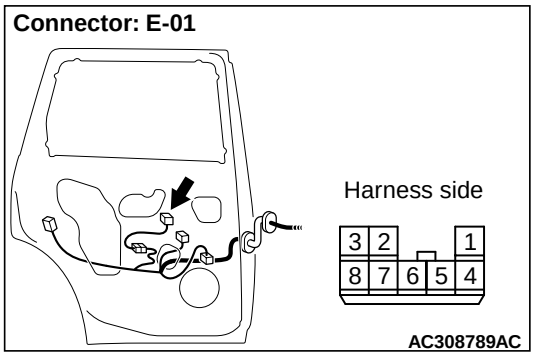

(1) Disconnect the connector, and measure at the wiring harness side.

(2) Turn the ignition switch to the ON position.

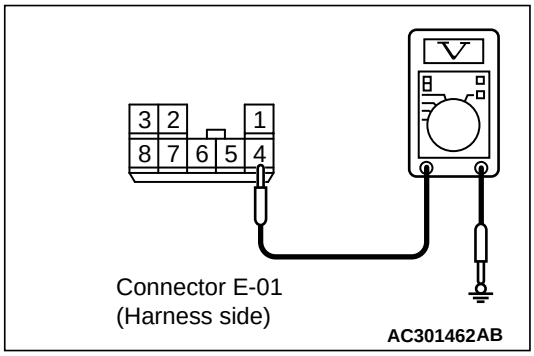

(3) Voltage between terminal 4 and body earth

OK: System voltage

Q: Is the check result normal?

YES : Go to Step 27.

NO : Go to Step 25.

Step 25. C-208 power window relay connector

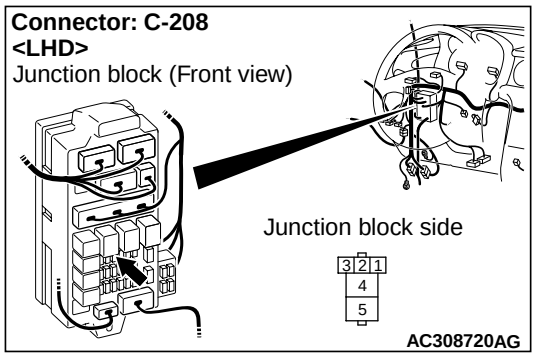

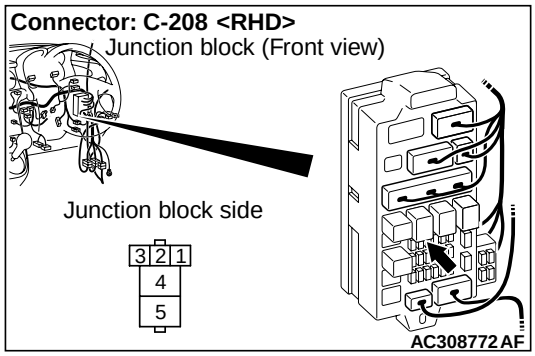

Q: Is the check result normal?
YES : Go to Step 26.
NO : Repair the connector.

Step 26. Check the wiring harness from E-01 power window sub switch (rear LH) connector terminal No.4 to C-208 power window relay connector terminal No.4.

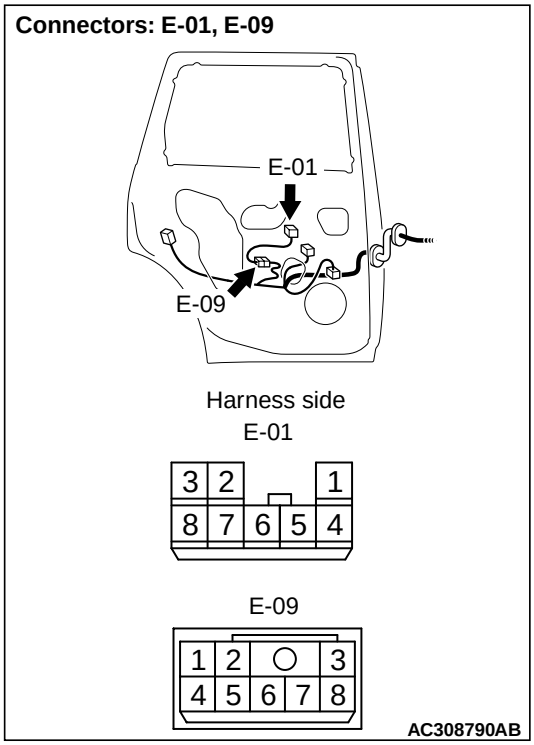

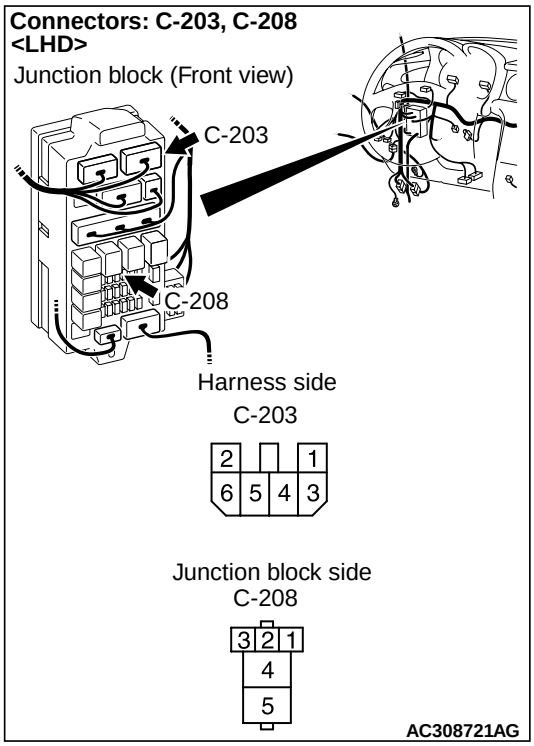

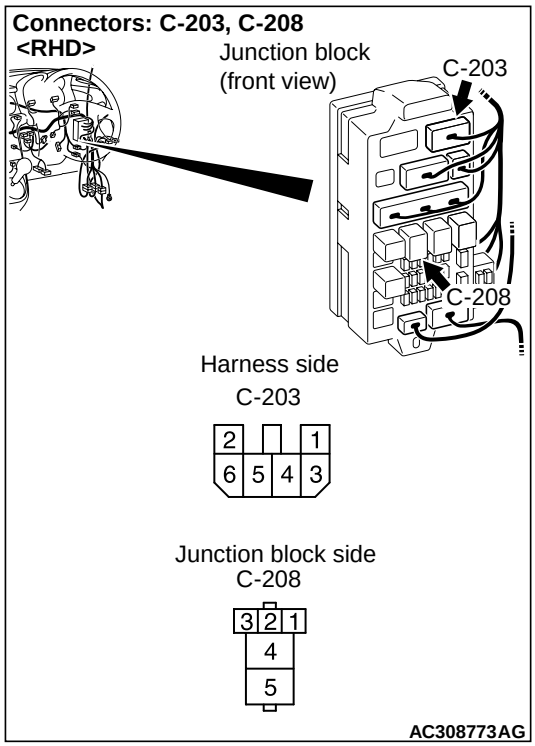

NOTE:

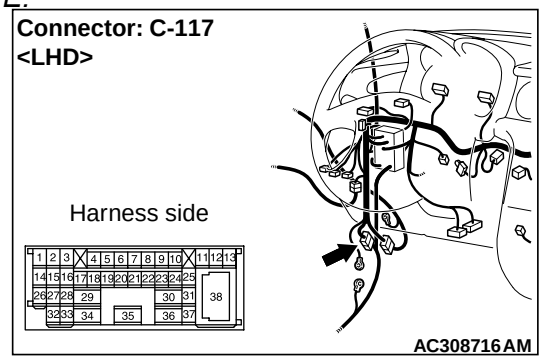

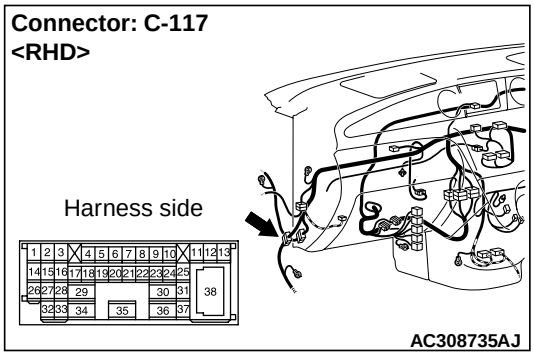

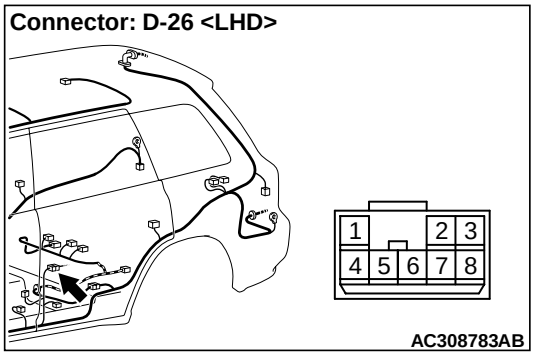

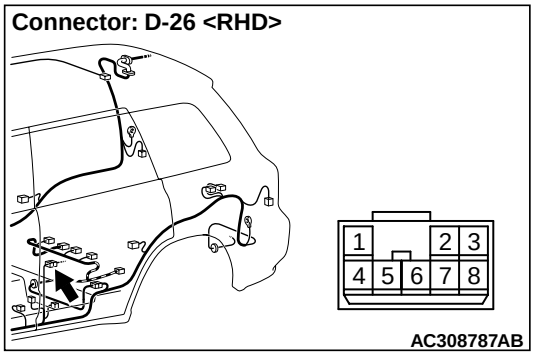

Prior to the wiring harness inspection, check intermediate connectors C-117, D-26, E-09 and junction block connector C-203, and repair if necessary.

- Check the power supply line for open circuit.

Q: Is the check result normal?
YES : The trouble can be an intermittent malfunction (Refer to GROUP 00, How to Cope with Intermittent Malfunction P.00-6).
NO : Repair the wiring harness.

Step 27. Connector check: E-03 power window motor (rear LH) connector

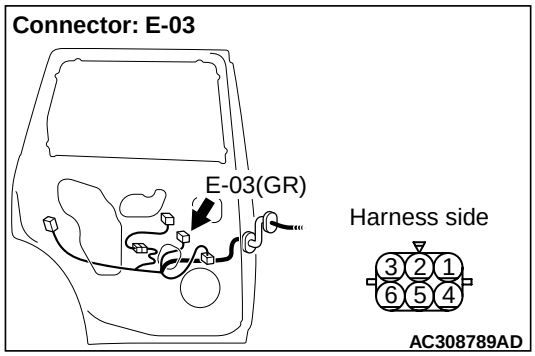

Q: Is the check result normal?
YES : Go to Step 28.
NO : Repair the connector.

Step 28. Check the wiring harness from E-03 power window motor (rear LH) connector terminal Nos. 1 and 3 to E-01 power window sub switch (rear LH) connector terminal Nos. 7 and 5.

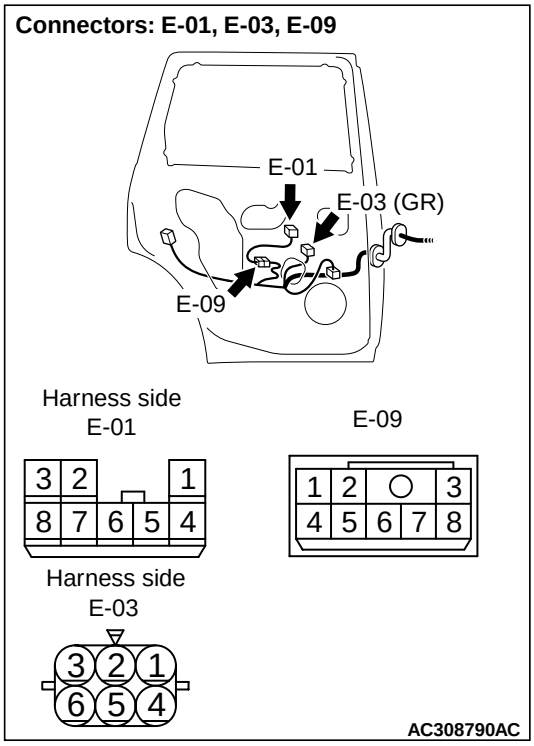

NOTE: Prior to the wiring harness inspection, check intermediate connector E-09, and repair if necessary.

- Check the input and output lines for open or short circuit.

Q: Is the check result normal?
YES : Go to Step 29.
NO : Repair the wiring harness.

Step 29. Retest the system.

After the power window sub switch (rear LH) is replaced, check that the rear left door power window can be operated by the power window sub switch (rear LH).

(1) Replace the power window sub switch (rear LH).
(2) Check that the rear left door power window can be operated by the power window sub switch (rear LH).

Q: Is the check result normal?
YES : The trouble can be an intermittent malfunction (Refer to GROUP 00 – How to Cope with Intermittent Malfunction P.00-6).
NO : Replace the power window motor assembly (rear LH).

INSPECTION PROCEDURE D-4: Front and/or rear passenger's power window(s) do not work by means of the power window main switch.

Power Window Circuit <LHD>

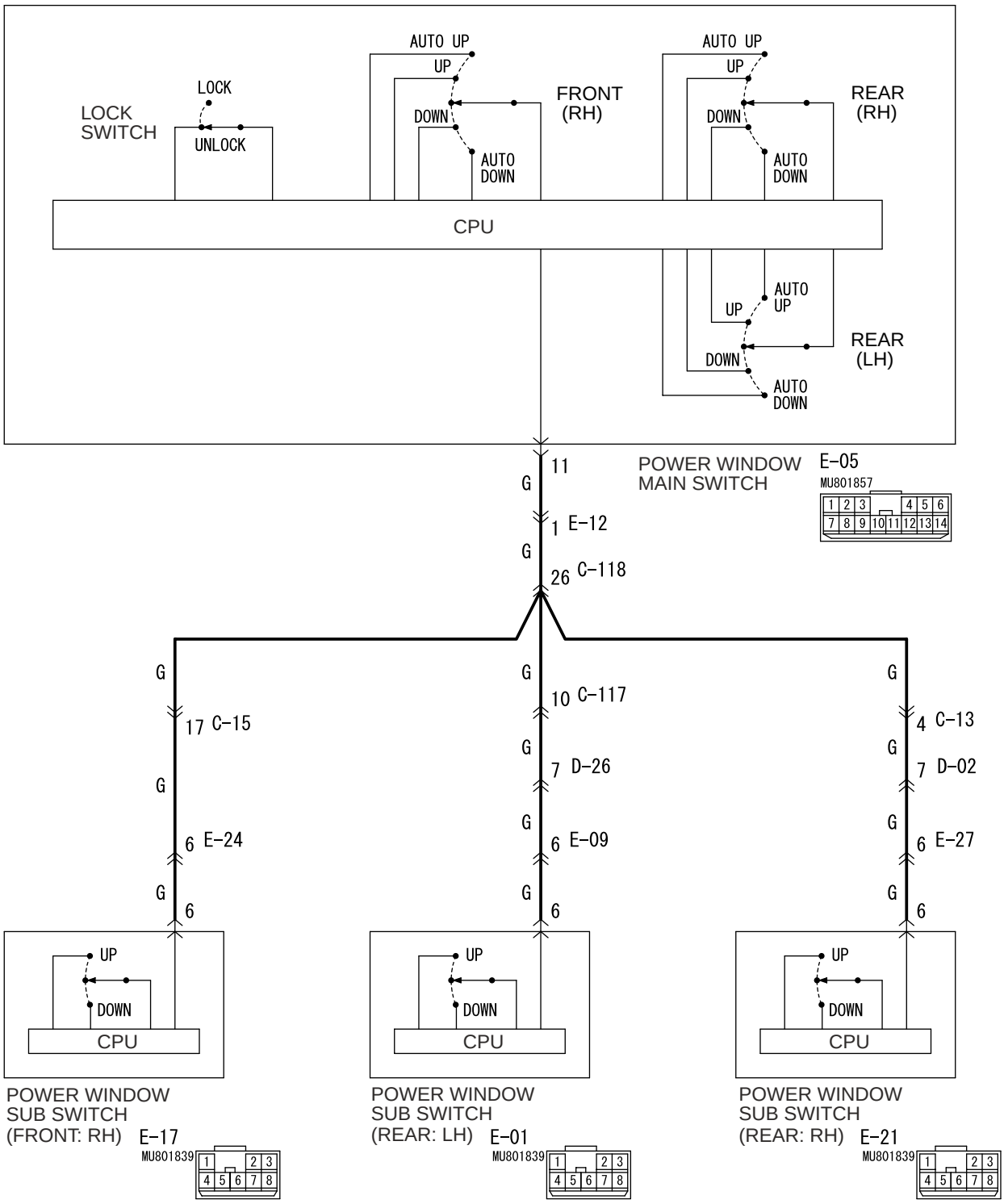

Wire colour code
B : Black LG : Light green G : Green L : Blue W : White Y : Yellow SB : Sky blue
BR : Brown O : Orange GR : Gray R : Red P : Pink V : Violet

W3Z18E01AB

Power Window Circuit <RHD>

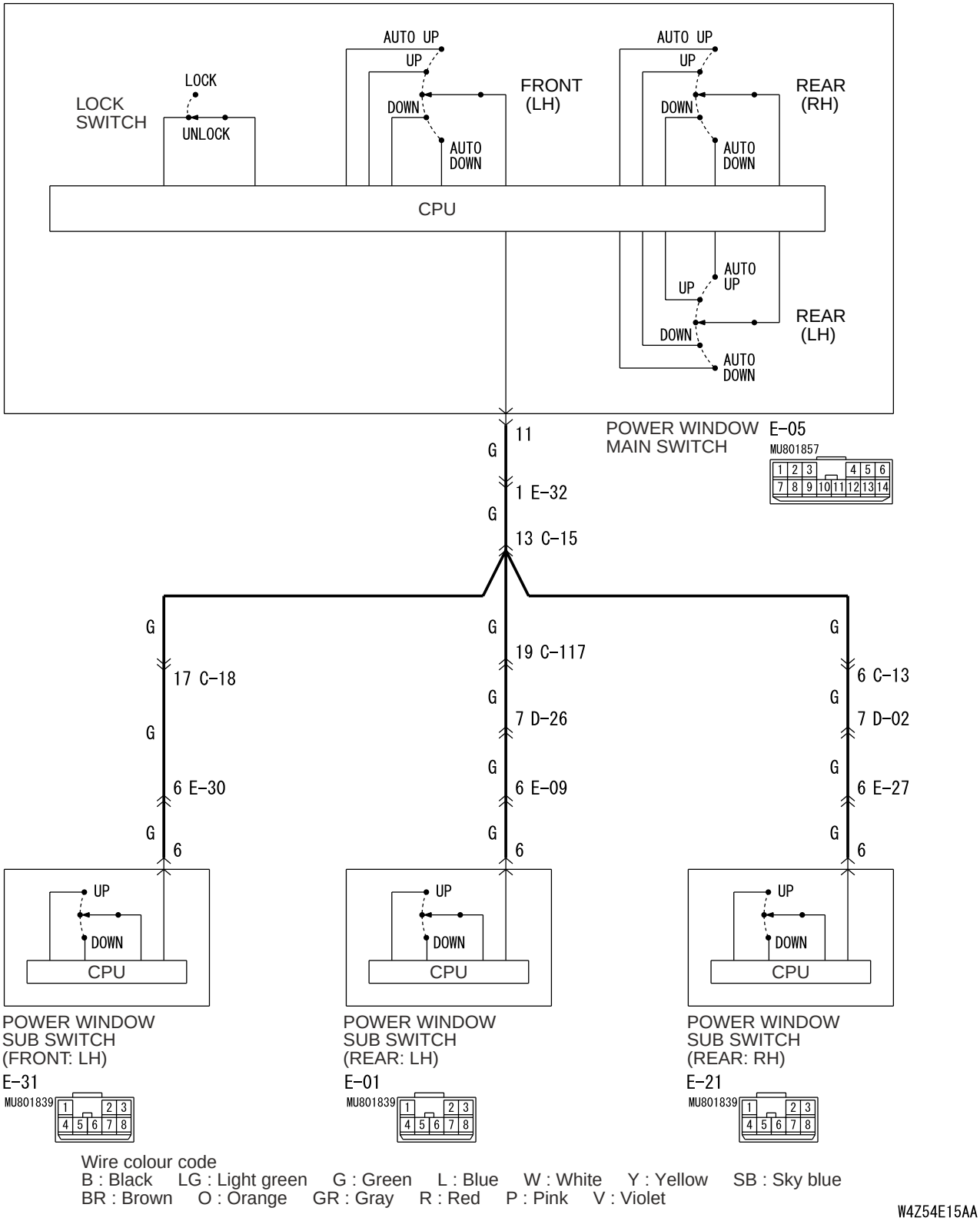

Wire colour code
B : Black LG : Light green G : Green L : Blue W : White Y : Yellow SB : Sky blue
BR : Brown O : Orange GR : Gray R : Red P : Pink V : Violet

W4Z54E15AA

COMMENTS ON TROUBLE SYMPTOM

If the passenger's and/or rear power window does not work by means of the power window main switch, the power window main switch or the respective power window sub switch(es) may be defective.

POSSIBLE CAUSES

- Malfunction of the power window main switch
- Malfunction of the power window sub switch (front, RH), power window sub switch (rear, RH) or power window sub switch (rear, LH)
- Damaged harness wires and connectors

DIAGNOSIS PROCEDURE

Step 1. Check the power window main switch.
Check that the driver's power window works by means of the power window main switch.

Q: Is the check result normal?
YES : Go to Step 2.
NO : Refer to inspection procedure D-2 "Driver's power window does not work by means of the power window main switch P.54B-97 <L.H. drive vehicles> or P.54B-102 <R.H. drive vehicles>."

Step 2. Check the power window sub switch.
Check that each power window works by means of the respective power window sub switch when the power window lock switch is turned off.

Q: Is the check result normal?
YES : Go to Step 3.
NO : Refer to inspection procedure D-3 "Relevant power window(s) do not work by means of the front and rear passenger's power window sub switches P.54B-107."

Step 3. Determine a trouble spot.

Q: Which power window does not work when the power window main switch is operated?
Front passenger's door : Go to Step 4.
Rear right door : Go to Step 7.
Rear left door : Go to Step 10.

Step 4. Connector check: E-05 power window main switch connector and E-17 power window sub switch (front RH) connector <L.H. drive vehicles> or E-31 power window sub switch (front LH) connector <R.H. drive vehicles>

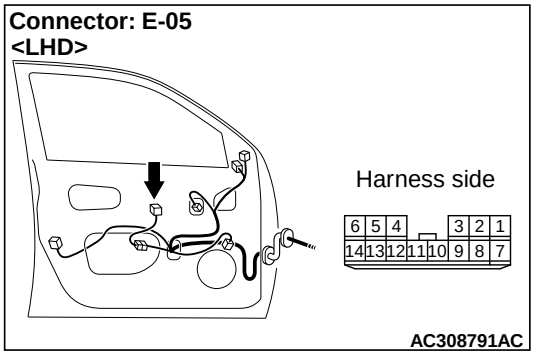

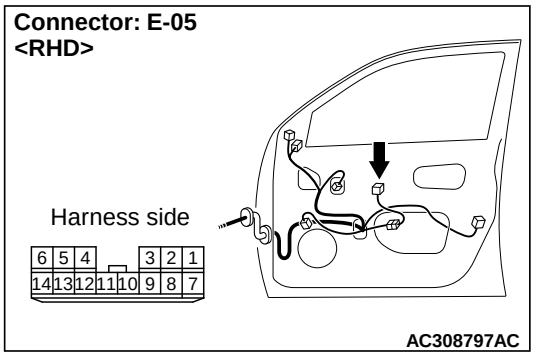

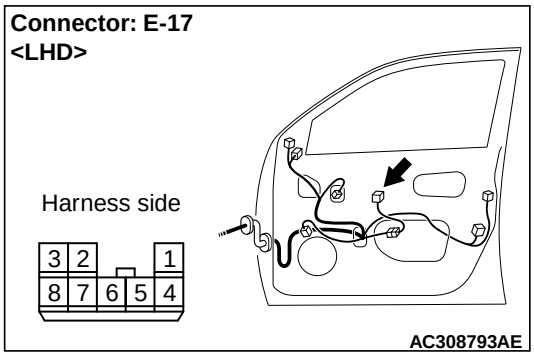

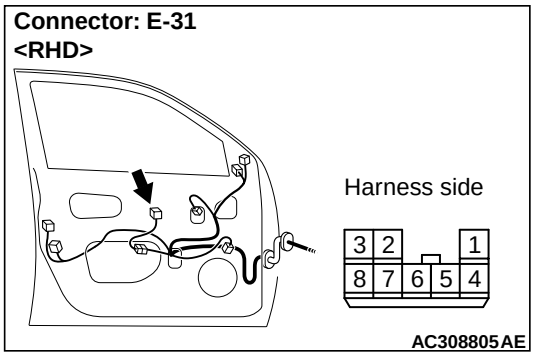

Q: Is the check result normal?
YES : Go to Step 5.
NO : Repair the connector.

Step 5. Check the wiring harness between E-05 power window main switch connector terminal No.11 and E-17 power window sub switch (front RH) connector <L.H. drive vehicles> or E-31 power window sub switch (front LH) connector <R.H. drive vehicles> terminal No.6.

Connectors: E-05, E-12
<LHD>

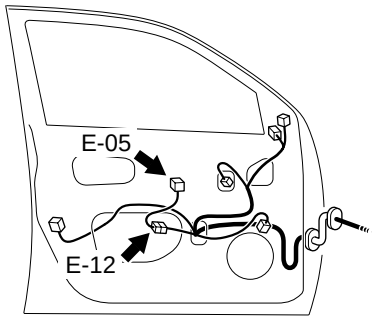

Harness side
E-05

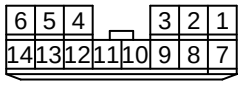

E-12

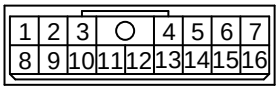

AC308792AE

Connector: E-05, E-32
<RHD>

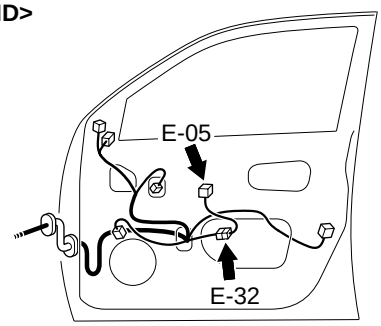

Harness side
E-05

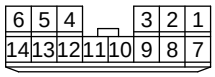

E-32

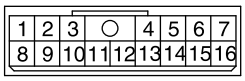

AC308798AB

Connectors: E-17, E-24
<LHD>

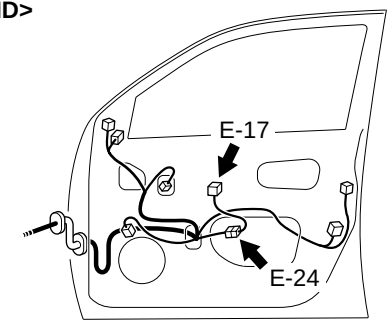

Harness side
E-17

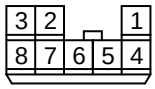

E-24

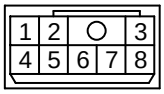

AC308794AB

Connectors: E-30, E-31
<RHD

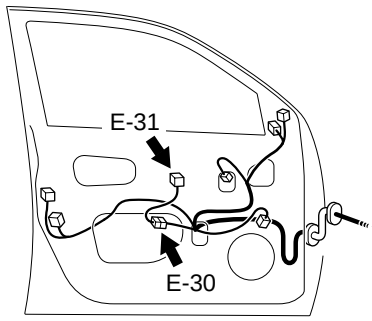

E-30

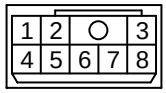

Harness side
E-31

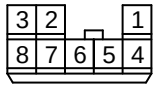

AC308806AD

NOTE:

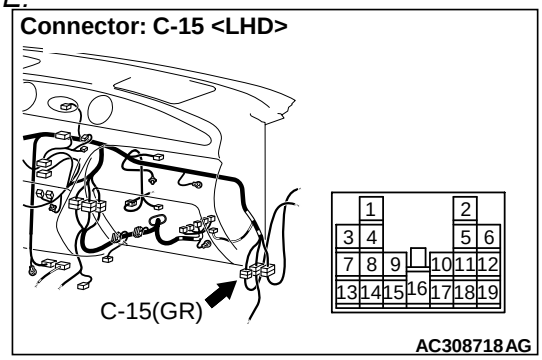

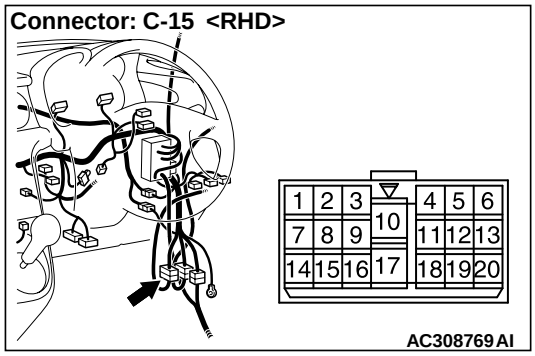

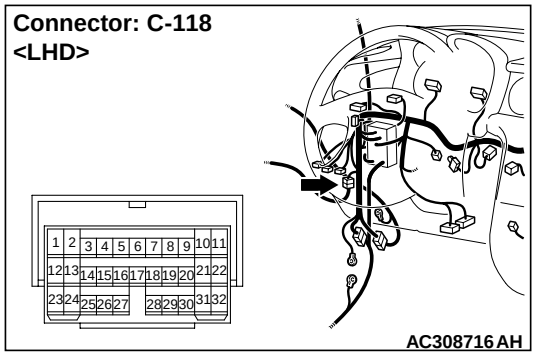

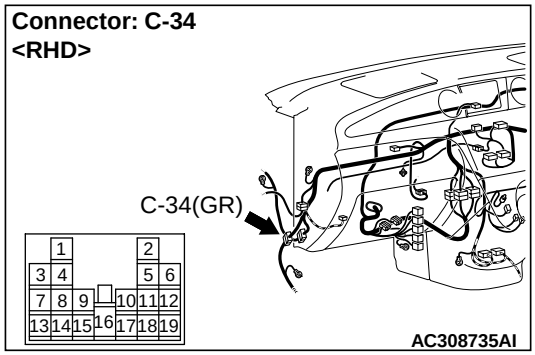

Prior to the wiring harness inspection, check intermediate connectors C-15 <L.H. drive vehicles>, C-118 <L.H. drive vehicles>, E-12 <L.H. drive vehicles>, E-24 <L.H. drive vehicles>, C-15 <R.H. drive vehicles>, C-34 <R.H. drive vehicles>, E-30 <R.H. drive vehicles> and E-32 <R.H. drive vehicles>, and repair if necessary.

- Check the communication lines for open circuit.

Q: Is the check result normal?
YES : Go to Step 6.
NO : Repair the wiring harness.

Step 6. Retest the system.

After the power window sub switch (front LH) is replaced, check that the front passenger's door power window can be operated by the power window sub switch.

(1) Replace the power window sub switch (front LH).
(2) Check that the front passenger's power window works by means of the power window main switch.

Q: Is the check result normal?
YES : The trouble can be an intermittent malfunction (Refer to GROUP 00 – How to Cope with Intermittent Malfunction P.00-6).
NO : Replace the power window main switch.

Step 7. Connector check: E-05 power window main switch connector and E-21 power window sub switch (rear RH) connector

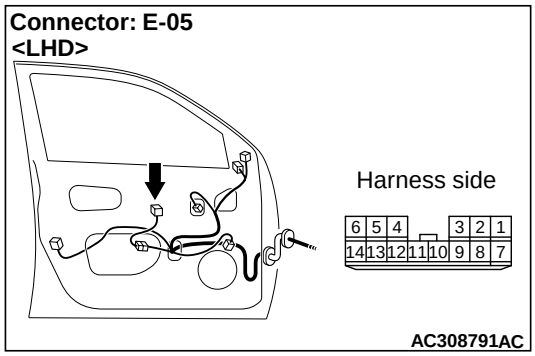

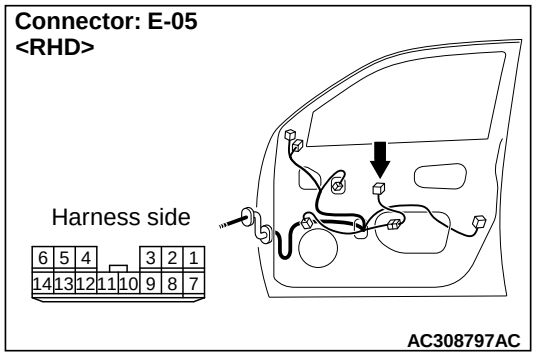

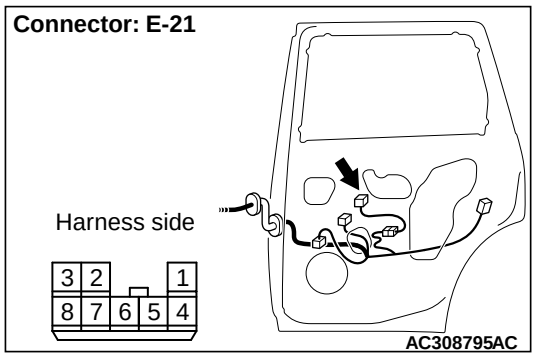

Q: Is the check result normal?
YES : Go to Step 8.
NO : Repair the connector.

Step 8. Check the wiring harness between E-05 power window main switch connector terminal No.11 and E-21 power window sub switch (rear RH) connector terminal No.6.

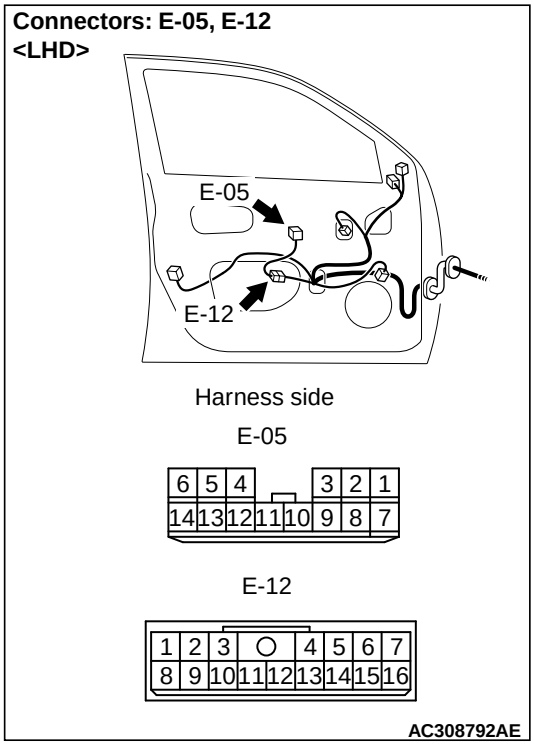

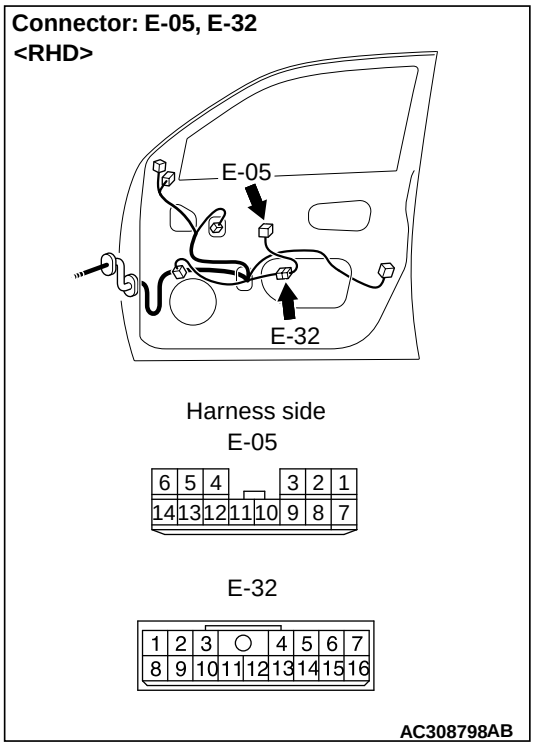

Connectors: E-21, E-27 <RHD>

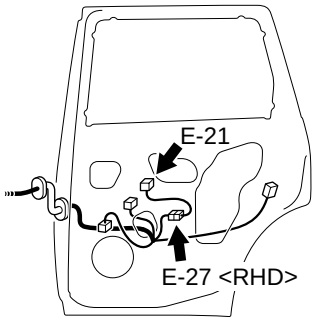

Harness side

E-21

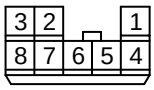

E-27 <RHD>

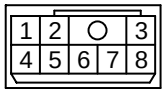

AC308802 AB

NOTE:

Connector: C-13 <LHD>

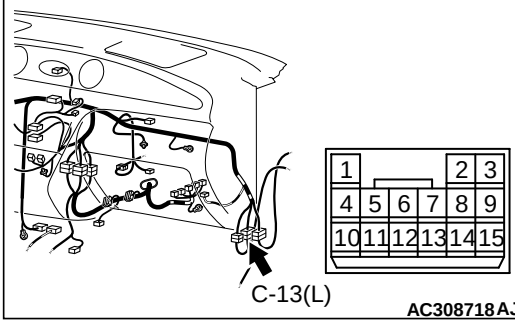

AC308718 AJ

CONNECTORS: C-13, C-15 <RHD>

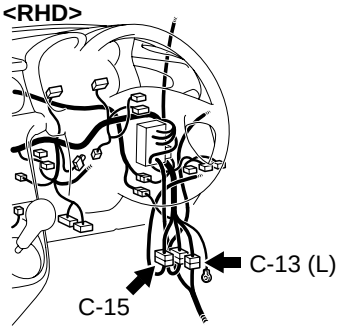

C-13

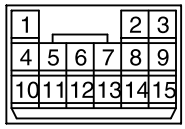

C-15

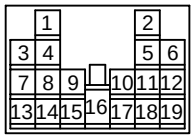

AC308770AE

Connector: C-118 <LHD>

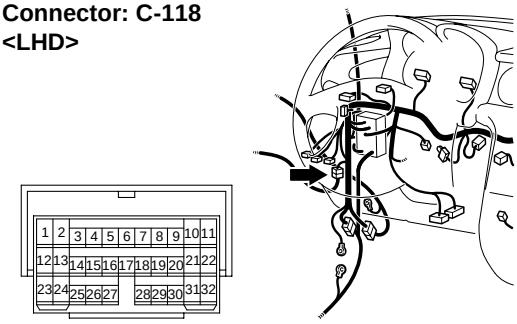

AC308716 AH

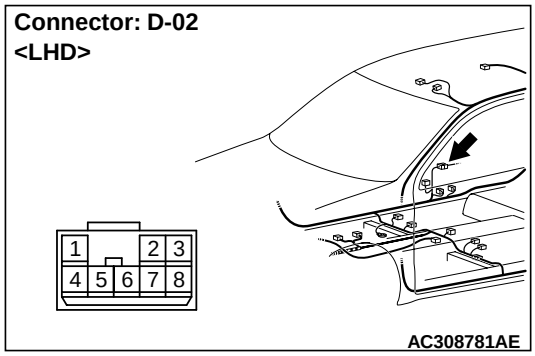

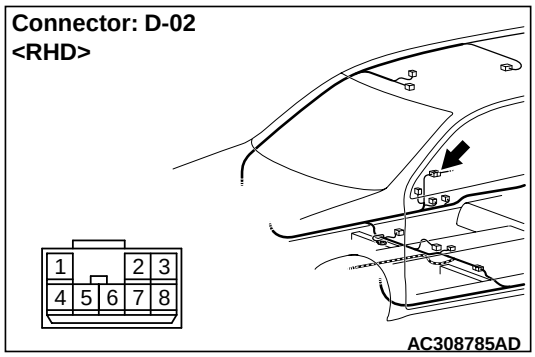

Prior to the wiring harness inspection, check intermediate connectors C-13, C-15 <R.H. drive vehicles>, C-118 <L.H. drive vehicles>, D-02, E-12 <L.H. drive vehicles>, E-27 and E-32 <R.H. drive vehicles>, and repair if necessary.

- Check the communication lines for open circuit.

Q: Is the check result normal?
YES : Go to Step 9.
NO : Repair the wiring harness.

Step 9. Retest the system.

After the power window sub switch (rear RH) is replaced, check that the rear right door power window can be operated by the power window sub switch.

(1) Replace the power window sub switch (rear RH).
(2) Check that the rear right power window works by means of the power window main switch.

Q: Is the check result normal?
YES : The trouble can be an intermittent malfunction (Refer to GROUP 00 – How to Cope with Intermittent Malfunction P.00-6).
NO : Replace the power window main switch.

Step 10. Connector check: E-05 power window main switch connector and E-01 power window sub switch (rear LH) connector

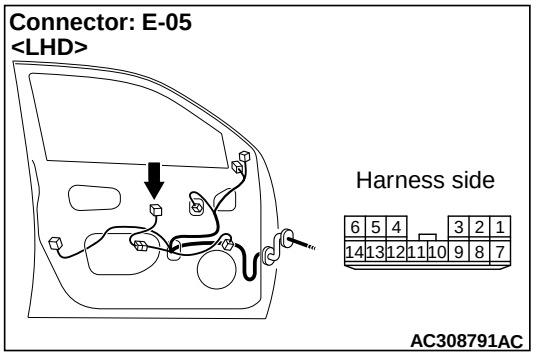

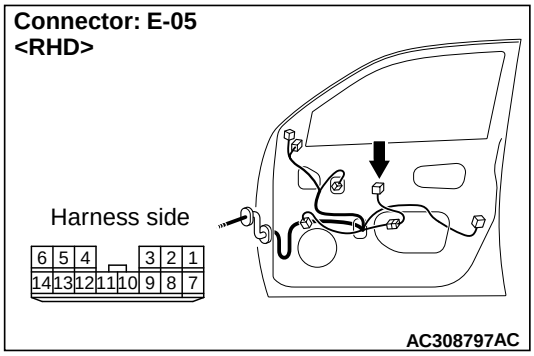

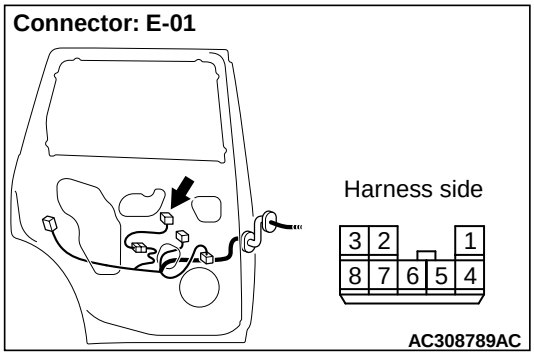

Q: Is the check result normal?
YES : Go to Step 11.
NO : Repair the connector.

Step 11. Check the wiring harness between E-05 power window main switch connector terminal No.11 and E-01 power window sub switch (rear LH) connector terminal No.6.

Connectors: E-05, E-12
<LHD>

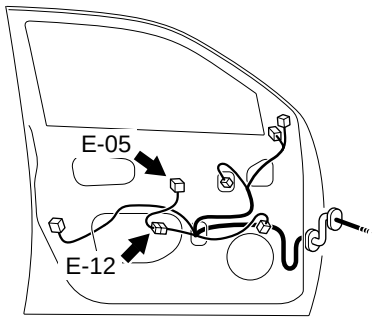

Harness side

E-05

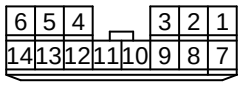

E-12

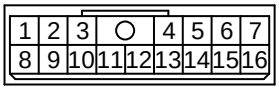

AC308792AE

Connector: E-05, E-32
<RHD>

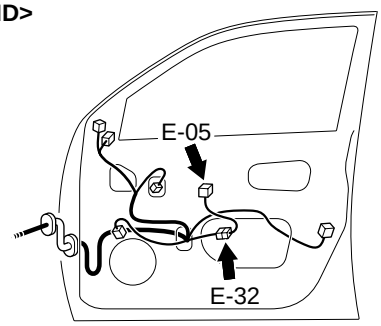

Harness side

E-05

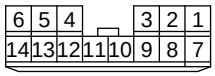

E-32

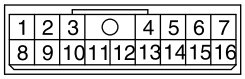

AC308798AB

Connectors: E-01, E-09

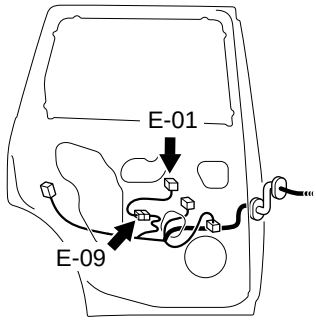

Harness side

E-01

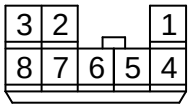

E-09

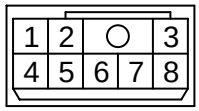

AC308790AB

NOTE:

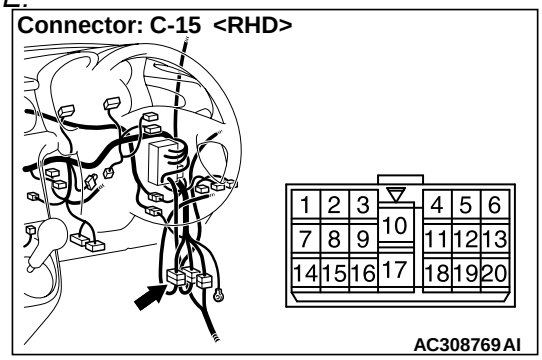

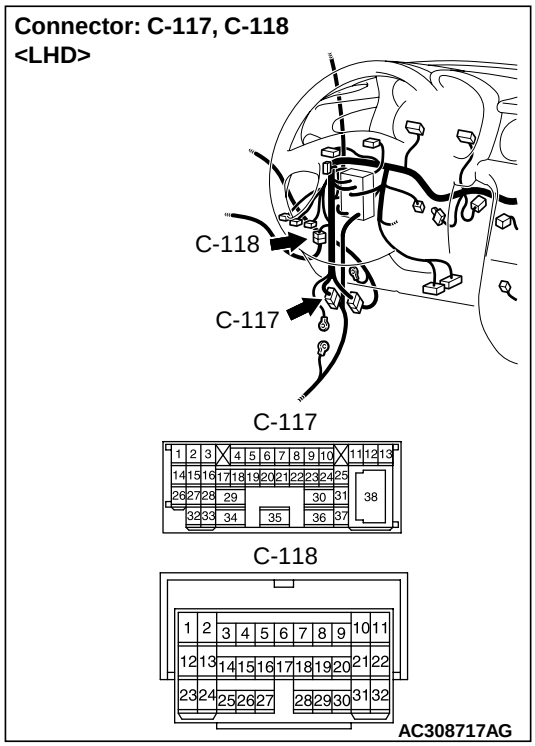

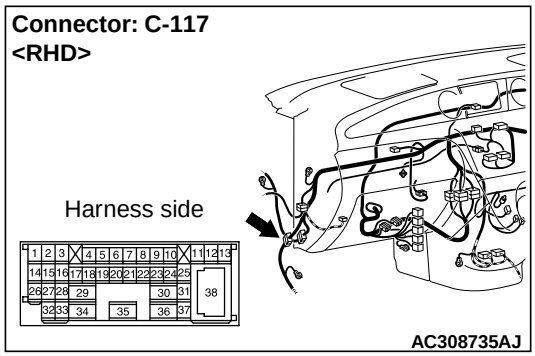

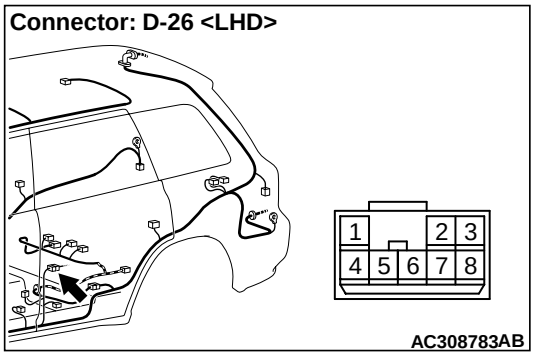

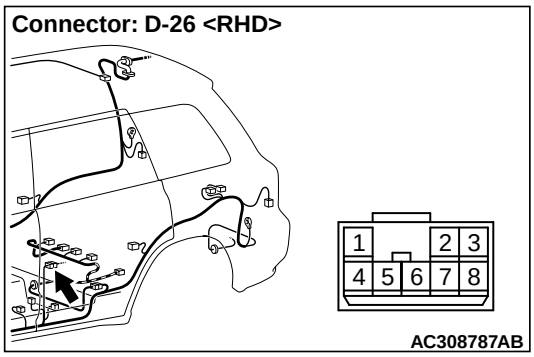

Prior to the wiring harness inspection, check intermediate connectors C-15 <R.H. drive vehicles>, C-117, C-118 <L.H. drive vehicles>, D-26, E-09, E-12 <L.H. drive vehicles> and E-32 <R.H. drive vehicles>, and repair if necessary.

- Check the communication lines for open circuit.

Q: Is the check result normal?
YES : Go to Step 12.
NO : Repair the wiring harness.

Step 12. Retest the system.

After the power window sub switch (rear LH) is replaced, check that the rear left door power window can be operated by the power window sub switch.

(1) Replace the power window sub switch (rear LH).
(2) Check that the rear left power window works by means of the power window main switch.

Q: Is the check result normal?
YES : The trouble can be an intermittent malfunction (Refer to GROUP 00 – How to Cope with Intermittent Malfunction P.00-6).
NO : Replace the power window main switch.

NSPECTION PROCEDURE D-5: The window glass lowers automatically while it is rising.

COMMENTS ON TROUBLE SYMPTOM

If the sliding resistance is too great when the window is being raised or the window glass encounters an object, the window glass will lower by approximately 150 mm.

POSSIBLE CAUSES

- Improper adjusted door window glass
- Incorrectly installed or warped glass slider
- Malfunction of the power window motor
- Malfunction of the window regulator

DIAGNOSIS PROCEDURE

Step 1. Check the power window anti-trap function.

Check that the power window anti-trap function works. Refer to GROUP 42 – Door – On-vehicle Service P.42-26.

Q: Is the check result normal?

YES : Go to Step 2.

NO : Refer to Inspection Procedure D-6 "Power window anti-trap function does not work normally P.54B-136."

Step 2. Check the power window operating current.

Check that the power window operating current is normal (Refer to GROUP 42 – Door – On-vehicle Service P.42-27).

Q: Is the check result normal?

YES : Adjust the door window glass (Refer to GROUP 42 – Door – On-vehicle service P.42-26), and then go to Step 3.

NO : Replace the defective power window motor assembly which operating current are abnormal.

Step 3. Check that the door window glasses are installed correctly.

Check that the door window glasses are installed correctly. Refer to GROUP 42 – Door – On-vehicle Service P.42-26.

Q: Is the check result normal?

YES : Go to Step 4.

NO : Adjust the door window glass (Refer to GROUP 42 – Door – On-vehicle service P.42-26).

Step 4. Retest the system.

Check that the power window does not lower automatically while it is being raised.

Q: Is the check result normal?

YES : The trouble can be an intermittent malfunction (Refer to GROUP 00 – How to Cope with Intermittent Malfunction P.00-6).

NO : Replace the power window motor assembly of the defective window.

INSPECTION PROCEDURE D-6: Power window anti-trap function does not work normally.

Power Window (front) Circuit <LHD>

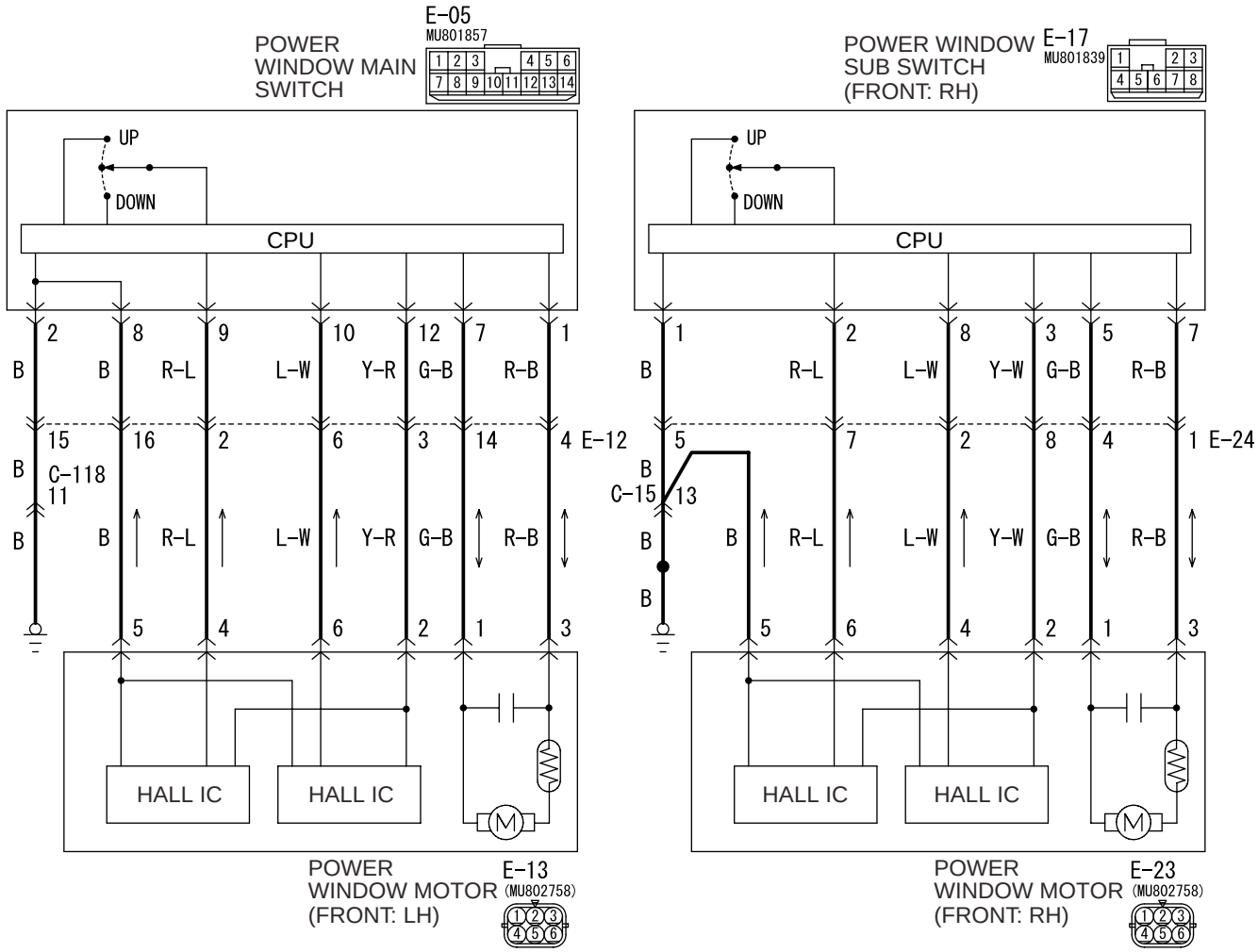

Wire colour code
B : Black LG : Light green G : Green L : Blue W : White Y : Yellow SB : Sky blue
BR : Brown O : Orange GR : Gray R : Red P : Pink V : Violet

W3Z17E03AB

Power Window (front) Circuit <RHD>

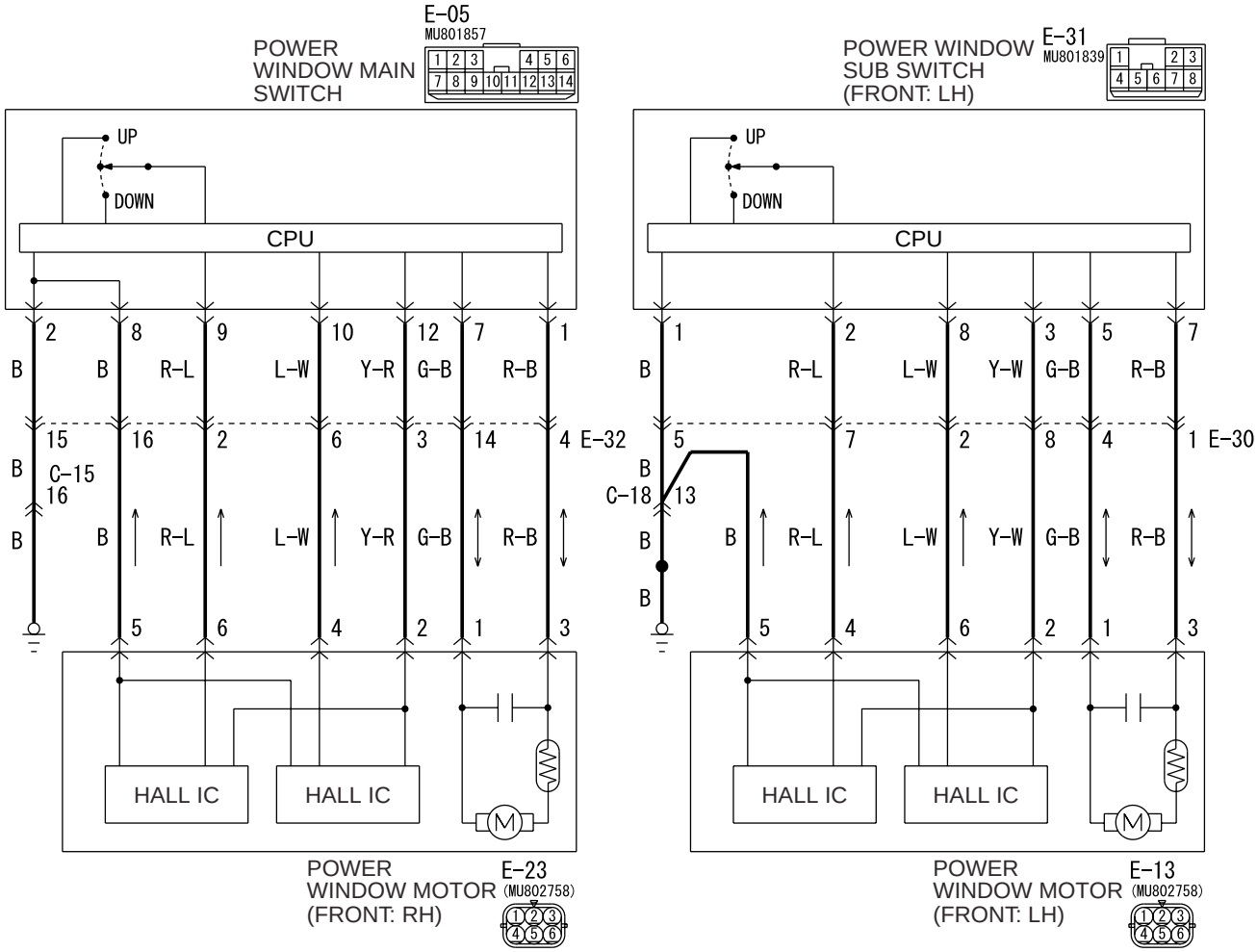

Wire colour code
B : Black LG : Light green G : Green L : Blue W : White Y : Yellow SB : Sky blue
BR : Brown O : Orange GR : Gray R : Red P : Pink V : Violet

W4Z54E16AA

Power Window (rear) Circuit

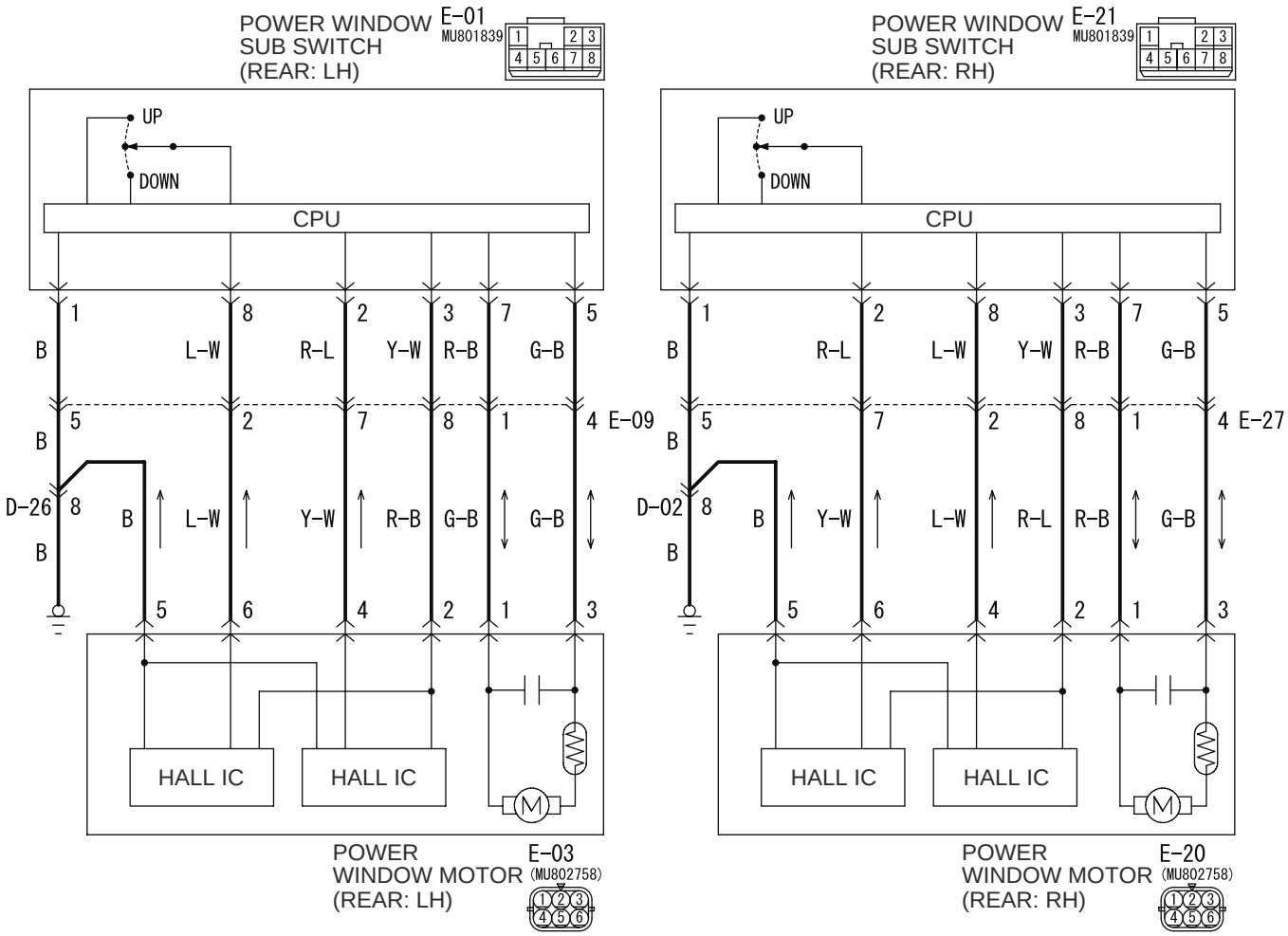

Wire colour code
B : Black LG : Light green G : Green L : Blue W : White Y : Yellow SB : Sky blue
BR : Brown O : Orange GR : Gray R : Red P : Pink V : Violet

W3Z17E04AA

COMMENTS ON TROUBLE SYMPTOM

The revolution detection sensor, which is incorporated in the power window motor, may be defective.

POSSIBLE CAUSES

- Malfunction of the power window motor

DIAGNOSIS PROCEDURE

Step 1. Check the power window operating current.

Check that the power window operating current is normal (Refer to GROUP 42 – Door – On-vehicle Service P.42-27).

Q: Is the check result normal?

YES : Adjust the door window glass (Refer to GROUP 42 – Door – On-vehicle service P.42-26), and then go to Step 2.

NO : Replace the defective power window motor assembly which operating current are abnormal.

Step 2. Confirm the power window learning function.

Check that the power window switch has learned the fully closed position of the windows (Refer to GROUP 42 – Door P.42-32).

Q: Is the check result normal?

YES : Go to Step 3.

NO : Make the power window switch learn the fully closed position of the windows (Refer to GROUP 42 – Door P.42-32).

Step 3. Determine a trouble spot.

Q: Which door does the power window anti-trap function fail on?

Driver's door : Go to Step 4.

Front passenger's door : Go to Step 7.

Rear right door : Go to Step 13.

Rear left door : Go to Step 19.

Step 4. Connector check: E-05 power window main switch connector and E-13 power window motor (front LH) connector <L.H. drive vehicles> or E-23 power window motor (front LH) connector <R.H. drive vehicles>

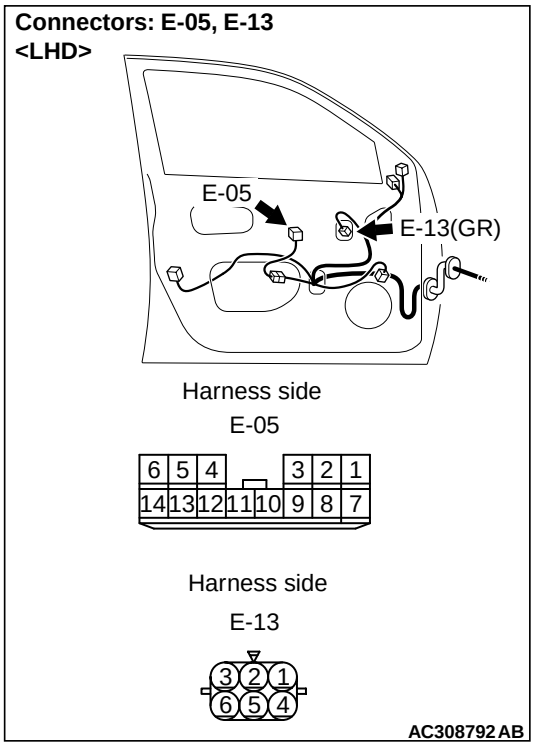

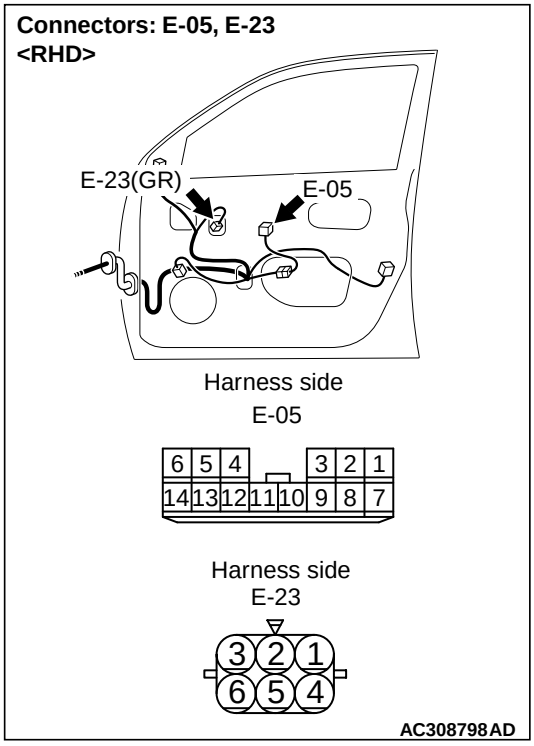

Q: Is the check result normal?

YES : Go to Step 5.

NO : Repair the defective connector.

Step 5. Check the wiring harness from E-05 power window main switch connector terminal Nos. 8, 9, 10 and 12 to E-13 power window motor (front LH) connector terminal Nos. 5, 4, 6 and 2 <L.H. drive vehicles> or E-23 power window motor (front RH) connector terminal Nos. 5, 6, 4 and 2 <R.H. drive vehicles>.

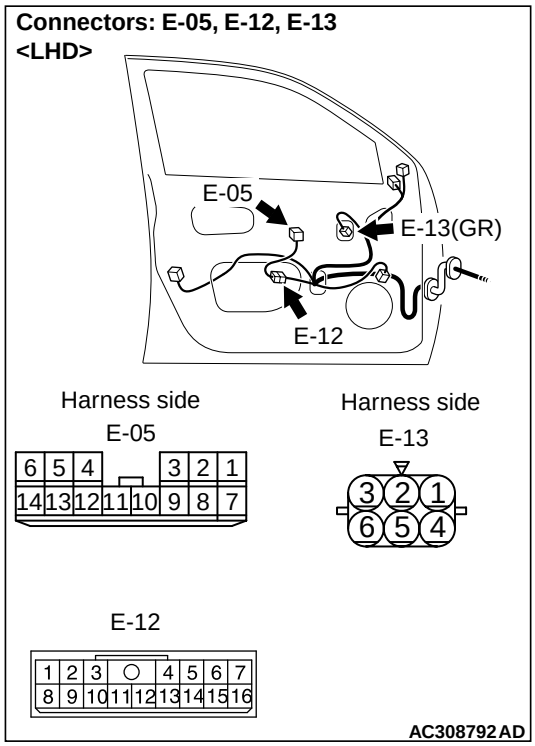

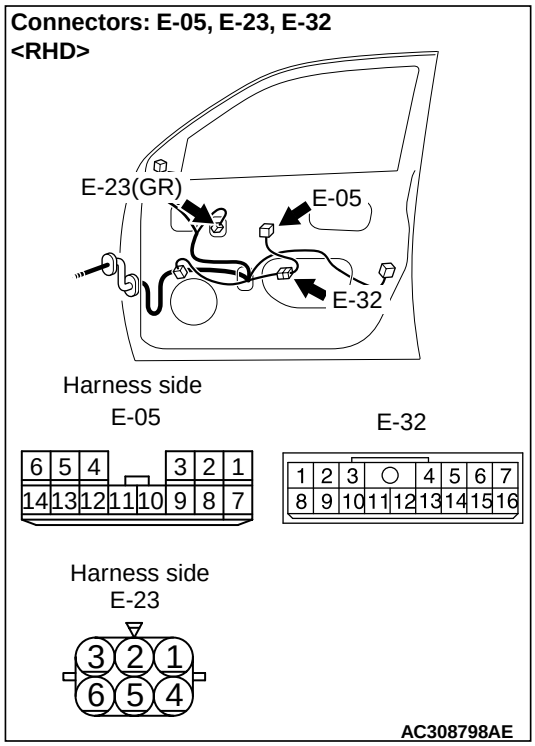

NOTE: Prior to the wiring harness inspection, check intermediate connector E-12 <L.H. drive vehicles> or E-32 <R.H. drive vehicles>, and repair if necessary.

- Check the input and output lines to the revolution detection sensor for open or short circuit.

Q: Is the check result normal?
YES : Go to Step 6.
NO : Repair the wiring harness.

Step 6. Retest the system.
After the power window main switch is replaced, check that the driver's power window anti-trap function works.
(1) Replace the power window main switch.
(2) Check that the driver's power window anti-trap function works.

Q: Is the check result normal?
YES : The trouble can be an intermittent malfunction (Refer to GROUP 00 – How to Cope with Intermittent Malfunction P.00-6).
NO : Replace the power window motor assembly (front LH).

Step 7. Connector check: E-23 power window motor (front RH) connector <L.H. drive vehicles> or E-13 power window motor (front LH) connector <R.H. drive vehicles>

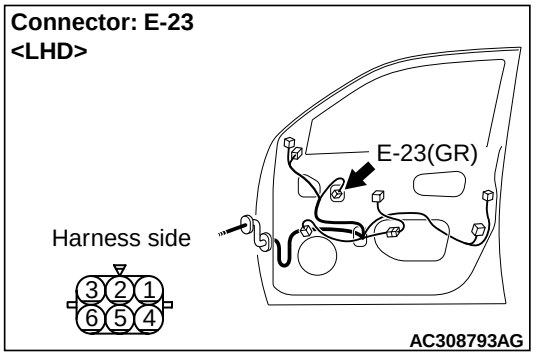

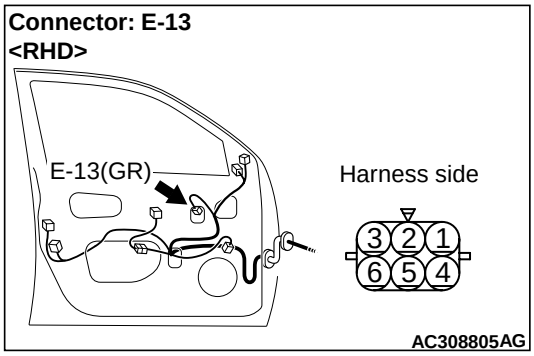

Q: Is the check result normal?
YES : Go to Step 8.
NO : Repair the defective connector.

Step 8. Measure the resistance at E-23 power window motor (front RH) connector <L.H. drive vehicles> or E-13 power window motor (front LH) connector <R.H. drive vehicles> power window motor (front RH) connector.

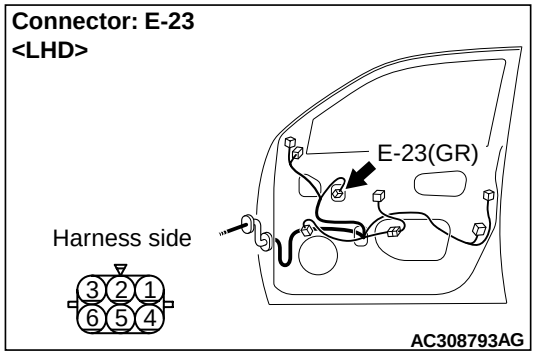

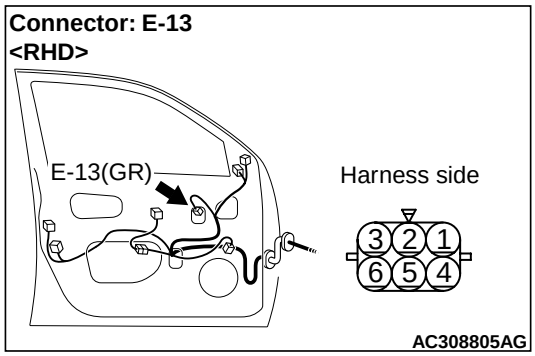

(1) Disconnect the connector, and measure at the wiring harness side.

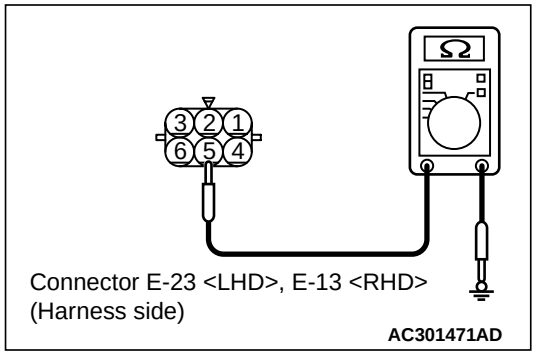

(2) Resistance between E-23 power window motor (front RH) connector <L.H. drive vehicles> or E-13 power window motor (front LH) connector <R.H. drive vehicles> power window motor (front RH) connector terminal No.5 and body earth.

OK: 2Ω or less

Q: Is the check result normal?
YES : Go to Step 10.
NO : Go to Step 9.

Step 9. Check the wiring harness from E-23 power window motor (front RH) connector terminal No.5 <L.H. drive vehicles> or E-13 power window motor (front RH) connector terminal No.5 <R.H. drive vehicles> to body earth.

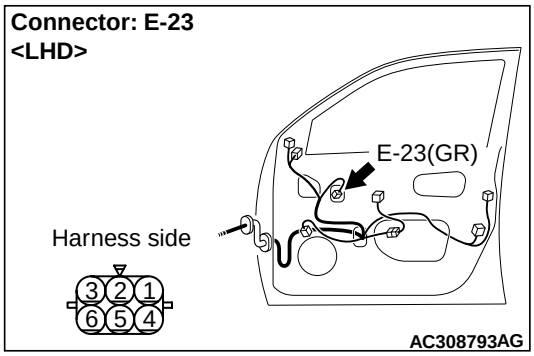

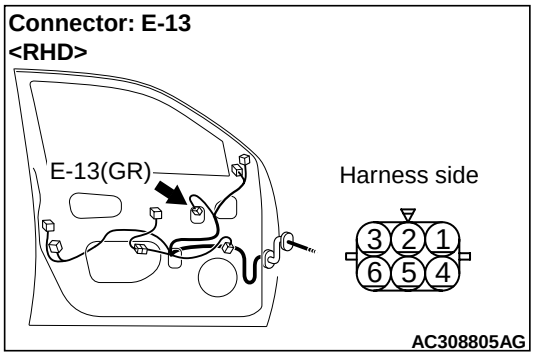

NOTE:

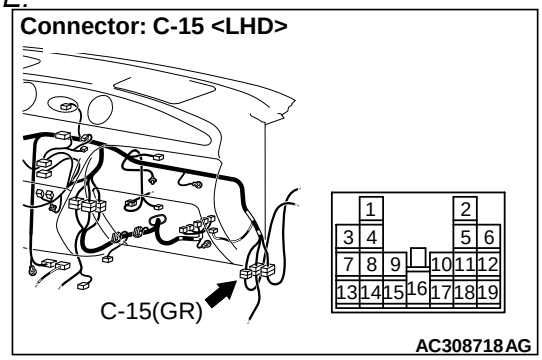

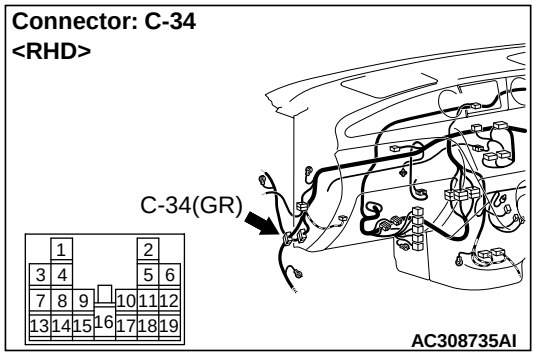

Prior to the wiring harness inspection, check intermediate connector C-15 <L.H. drive vehicles> or C-34 <R.H. drive vehicles>, and repair if necessary.

- Check the input and output lines to the revolution detection sensor for open or short circuit.

Q: Is the check result normal?
YES : Go to Step 10.
NO : Repair the wiring harness.

Step 10. Connector check: E-17 power window sub switch (front RH) connector <L.H. drive vehicles> or E-31 power window sub switch (front LH) connector <R.H. drive vehicles> power window sub switch (front RH) connector

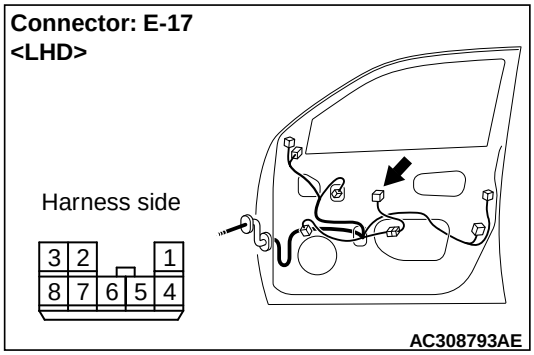

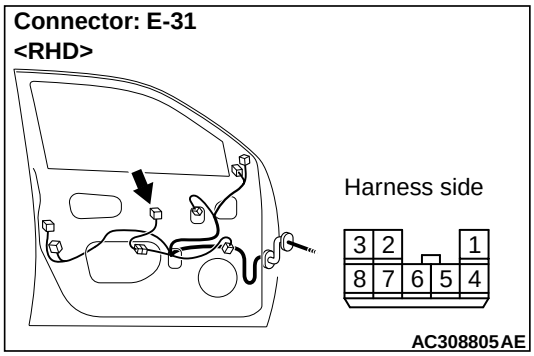

Q: Is the check result normal?
YES : Go to Step 11.
NO : Repair the defective connector.

Step 11. Check the wiring harness from E-17 power window sub switch (front RH) connector <L.H. drive vehicles> or E-31 power window sub switch (front LH) connector <R.H. drive vehicles> terminal Nos. 2, 8 and 3 to E-23 power window motor (front LH) connector terminal Nos. 6, 4 and 2 <L.H. drive vehicles> or E-13 power window motor (front LH) connector terminal Nos. 4, 6 and 2 <R.H. drive vehicles>.

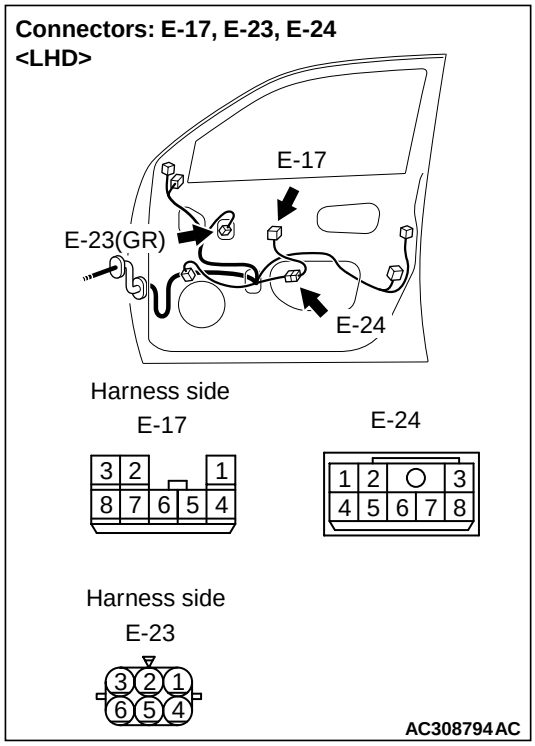

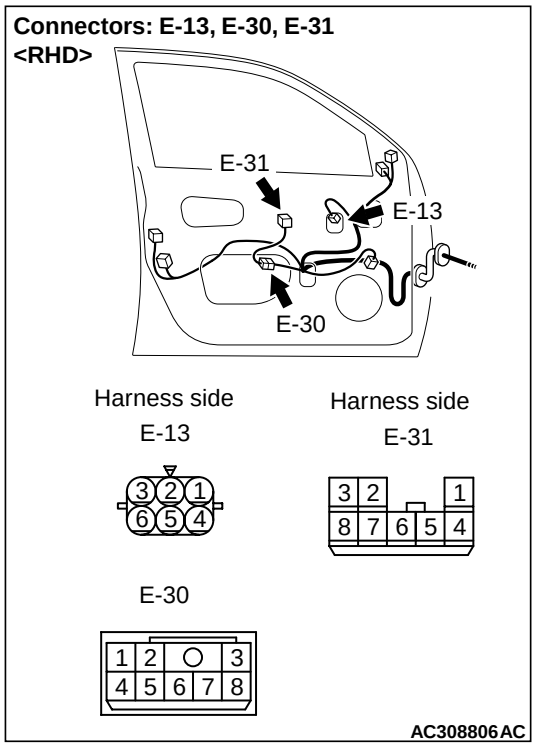

NOTE: Prior to the wiring harness inspection, check intermediate connector E-24 <L.H. drive vehicles> or E-30 <R.H. drive vehicles>, and repair if necessary.

- Check the input and output lines to the revolution detection sensor for open or short circuit.

Q: Is the check result normal?
YES : Go to Step 12.
NO : Repair the wiring harness.

Step 12. Retest the system.
After the power window sub switch (front LH) is replaced, check that the front passenger's anti-trap function can be operated by the power window sub switch.

(1) Replace the power window sub switch (front LH).
(2) Check that the front passenger's power window anti-trap function works.

Q: Is the check result normal?
YES : The trouble can be an intermittent malfunction (Refer to GROUP 00 – How to Cope with Intermittent Malfunction P.00-6).
NO : Replace the power window motor assembly (front LH).

Step 13. Connector check: E-20 power window motor (rear RH) connector

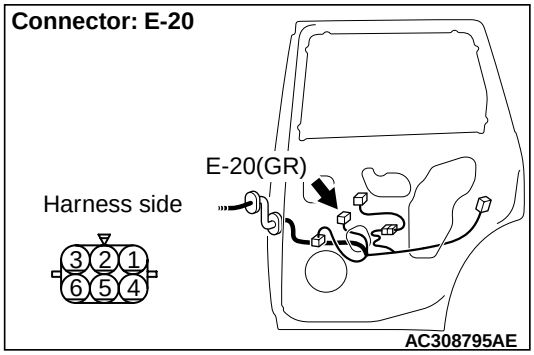

Q: Is the check result normal?
YES : Go to Step 14.
NO : Repair the defective connector.

Step 14. Measure the resistance at E-20 power window motor (rear RH) connector.

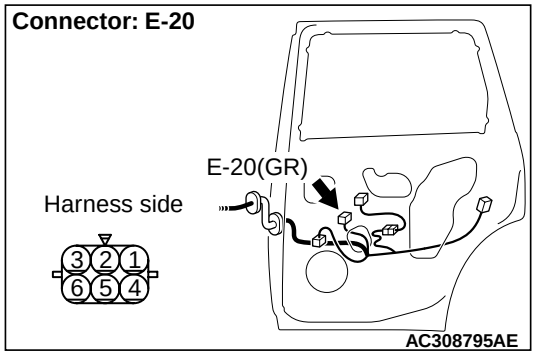

(1) Disconnect the connector, and measure at the wiring harness side.

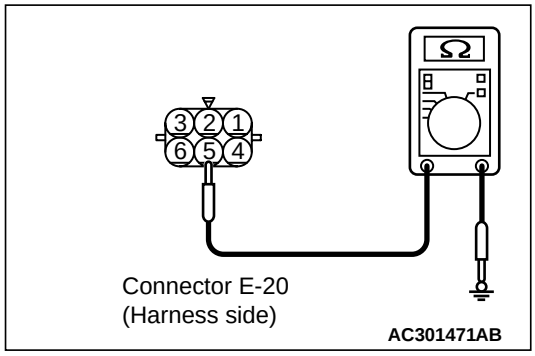

(2) Resistance between E-20 power window motor (rear RH) connector terminal No.5 and body earth.

OK: 2Ω or less

Q: Is the check result normal?
YES : Go to Step 16.
NO : Go to Step 15.

Step 15. Check the wiring harness from E-20 power window motor (rear RH) connector terminal No.5 to body earth.

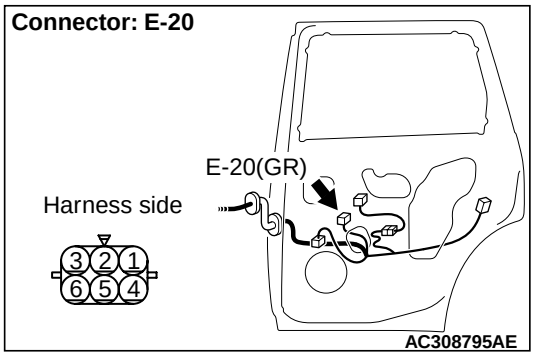

NOTE:

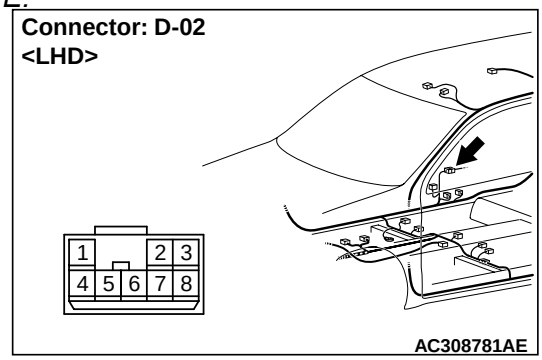

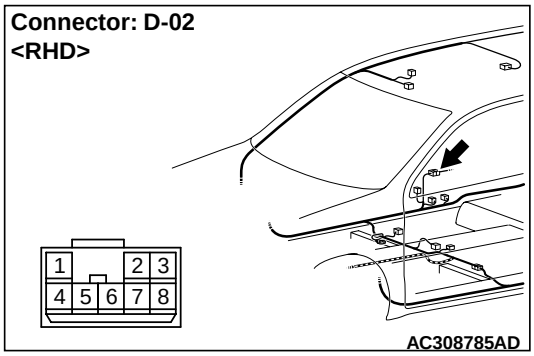

Prior to the wiring harness inspection, check intermediate connector D-02, and repair if necessary.

- Check the input and output lines to the revolution detection sensor for open or short circuit.

Q: Is the check result normal?
YES : Go to Step 16.
NO : Repair the wiring harness.

Step 16. Connector check: E-21 power window sub switch (rear RH) connector

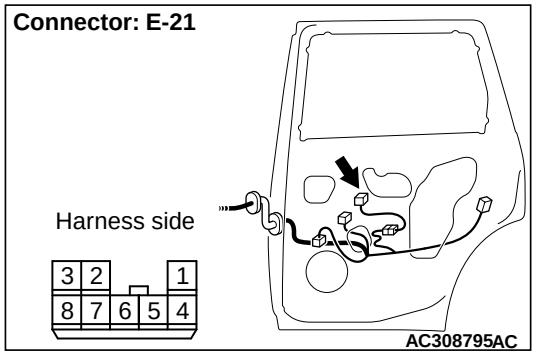

Q: Is the check result normal?
YES : Go to Step 17.
NO : Repair the defective connector.

Step 17. Check the wiring harness from E-21 power window sub switch (rear RH) connector terminal Nos. 2, 8 and 3 to E-20 power window motor (rear RH) connector terminal Nos. 6, 4 and 2.

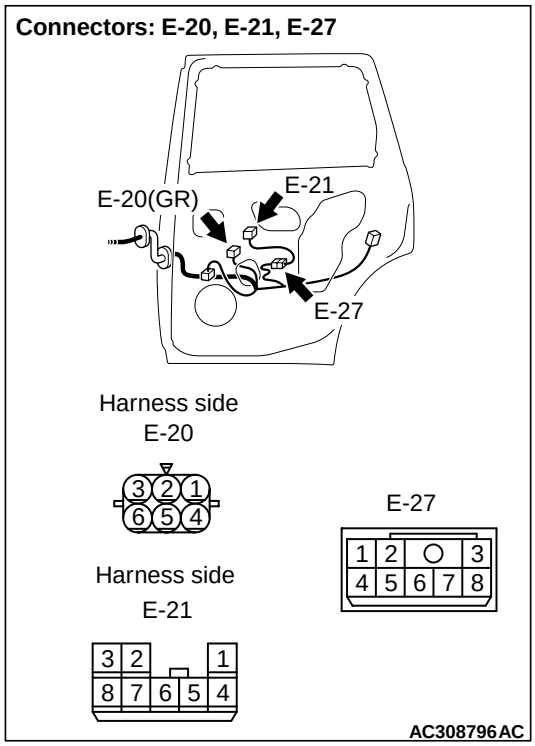

NOTE: Prior to the wiring harness inspection, check intermediate connector E-27, and repair if necessary.

- Check the input and output lines to the revolution detection sensor for open or short circuit.

Q: Is the check result normal?
YES : Go to Step 18.
NO : Repair the wiring harness.

Step 18. Retest the system.

After the power window sub switch (rear RH) is replaced, check that the rear right door anti-trap function can be operated by the power window sub switch.

(1) Replace the power window sub switch (rear RH).
(2) Check that the rear right power window anti-trap function works.

Q: Is the check result normal?
YES : The trouble can be an intermittent malfunction (Refer to GROUP 00 – How to Cope with Intermittent Malfunction P.00-6).
NO : Replace the power window motor assembly (rear RH).

Step 19. Connector check: E-03 power window motor (rear LH) connector

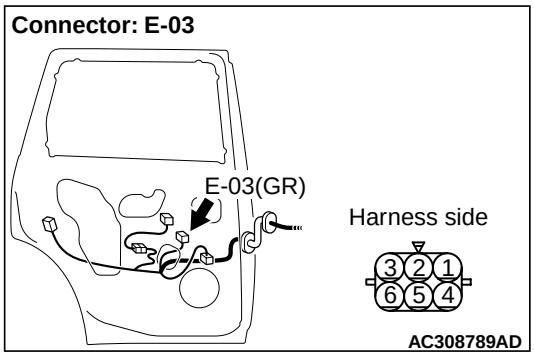

Q: Is the check result normal?
YES : Go to Step 20.
NO : Repair the defective connector.

Step 20. Measure the resistance at E-03 power window motor (rear LH) connector.

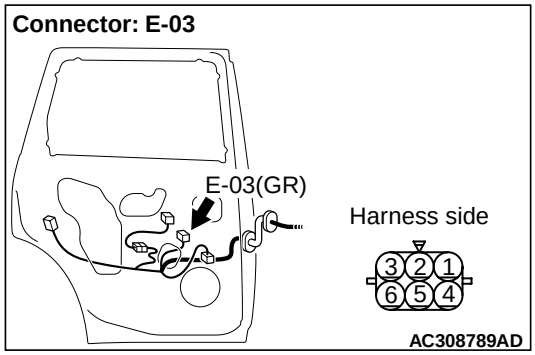

(1) Disconnect the connector, and measure at the wiring harness side.

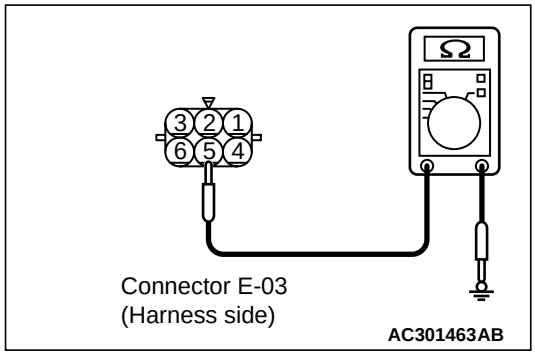

(2) Resistance between E-03 power window motor (rear LH) connector terminal No.5 and body earth.

OK: 2Ω or less

Q: Is the check result normal?
YES : Go to Step 22.
NO : Go to Step 21.

Step 21. Check the wiring harness from E-03 power window motor (rear LH) connector terminal No.5 to body earth.

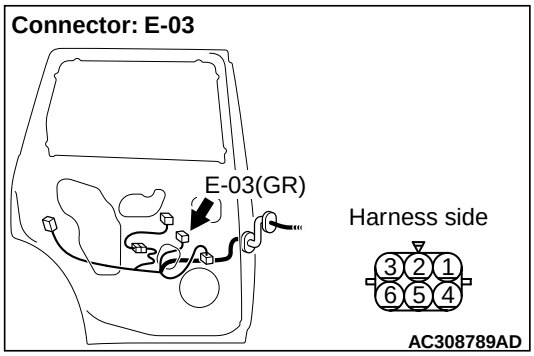

NOTE:

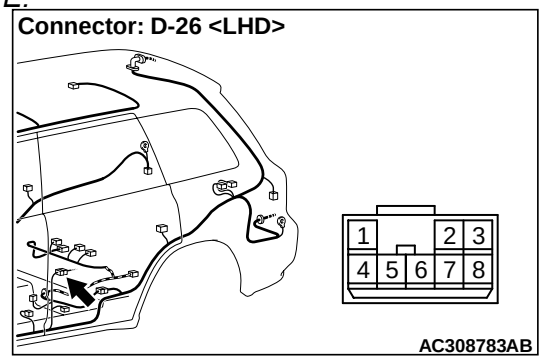

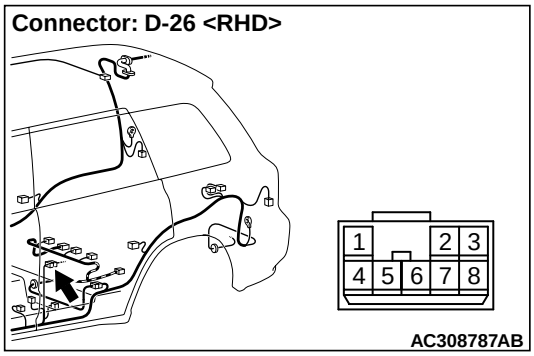

Prior to the wiring harness inspection, check intermediate connector D-26, and repair if necessary.

- Check the input and output lines to the revolution detection sensor for open or short circuit.

Q: Is the check result normal?
YES : Go to Step 22.
NO : Repair the wiring harness.

Step 22. Connector check: E-01 power window sub switch (rear LH) connector

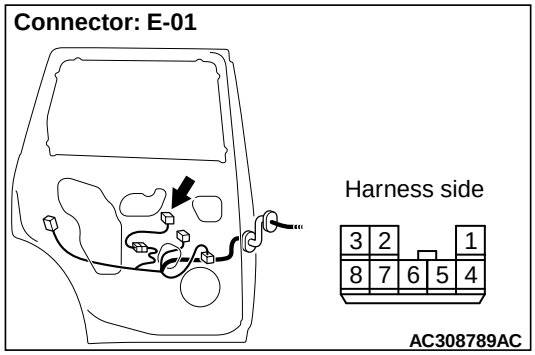

Q: Is the check result normal?
YES : Go to Step 23.
NO : Repair the defective connector.

Step 23. Check the wiring harness from E-01 power window sub switch (rear LH) connector terminal Nos. 8, 2 and 3 to E-03 power window motor (rear LH) connector terminal Nos. 6, 4 and 2.

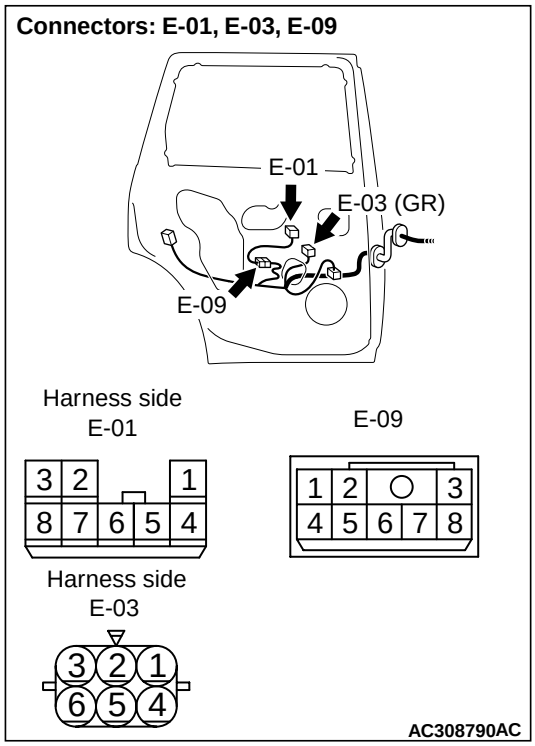

NOTE: Prior to the wiring harness inspection, check intermediate connector E-09, and repair if necessary.

- Check the input and output lines to the revolution detection sensor for open or short circuit.

Q: Is the check result normal?
YES : Go to Step 24.
NO : Repair the wiring harness.

Step 24. Retest the system.

After the power window sub switch (rear LH) is replaced, check that the rear left door anti-trap function can be operated by the power window sub switch.

(1) Replace the power window sub switch (rear LH).
(2) Check that the rear left power window anti-trap function works.

Q: Is the check result normal?
YES : The trouble can be an intermittent malfunction (Refer to GROUP 00 – How to Cope with Intermittent Malfunction P.00-6).
NO : Replace the power window motor assembly (rear LH).

KEYLESS ENTRY SYSTEM

INSPECTION PROCEDURE E-1: Keyless Entry System does not Work.

⚠ CAUTION
Whenever the ECU is replaced, ensure that the input and output signal circuits are normal.

Keyless Entry System Function Circuit

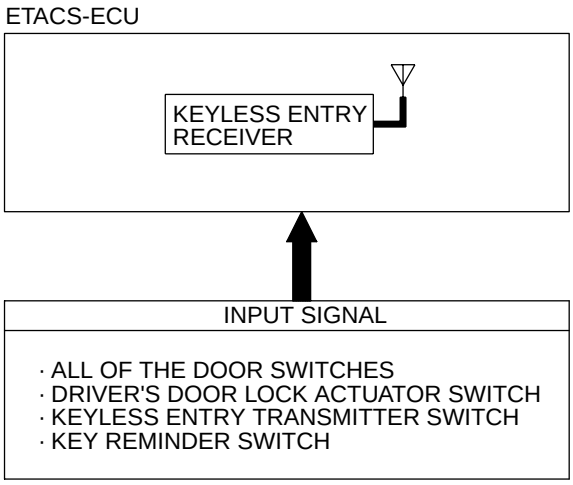

W3Z16E04AA

COMMENTS ON TROUBLE SYMPTOM

If the keyless entry system does not work normally, the input signal circuits to the components below or the ETACS-ECU may be defective.

- Key reminder switch
- All of the door switches
- Keyless entry transmitter
- Driver's door lock actuator

POSSIBLE CAUSES

- Malfunction of the key reminder switch
- Malfunction of the door switches
- Malfunction of the keyless entry transmitter
- Malfunction of the driver's door lock actuator
- Malfunction of the ETACS-ECU
- Damaged harness wires and connectors

DIAGNOSIS PROCEDURE

Step 1. Check the power supply circuit.
When the ignition switch is turned to the LOCK (OFF) position, check if the hazard warning lamps illuminate.

Q: Is the check result normal?
YES : Go to Step 2.
NO : Refer to inspection procedure A-2 "Check the ETACS-ECU battery power supply circuit" P.54B-52.

Step 2. Pulse check
Check the input signals below which are related to the keyless entry system.

System switch	Check condition
Key reminder switch	When the inserted ignition key is pulled out
All of the door switches	A door is opened when all the doors are closed
Driver's door lock actuator switch	When the driver's key cylinder or inside lock knob is unlocked or locked
Keyless entry transmitter switch	When the switch is turned from off to on

OK: The MUT-II/III sounds or the voltmeter needle fluctuates.

Q: Is the check result normal?

All the signals are received normally. : Go to Step 3.

The key reminder switch signal is not received. : Refer to inspection procedure N-9 "The key reminder switch signal is not received P.54B-334."

All the door switch signals are not received. : Refer to inspection procedure N-11 "All the door switch signals are not received <L.H. drive vehicles>P.54B-342 or <R.H. drive vehicles>P.54B-346 ."

The driver's door lock actuator switch signal is not received. : Refer to inspection procedure N-12 "The driver's door lock actuator signal is not received <L.H. drive vehicles>P.54B-350 or <R.H. drive vehicles>P.54B-354 .

The keyless entry transmitter switch signal is not received. : Refer to inspection procedure N-14 "Each switch signal of the keyless entry transmitter is not received P.54B-366."

Step 3. Retest the system.
Check the keyless entry system works normally.

Q: Is the check result normal?

YES : The trouble can be an intermittent malfunction (Refer to GROUP 00 – How to Cope with Intermittent Malfunction P.00-6).

NO : Replace the ETACS-ECU.

INSPECTION PROCEDURE E-2: Keyless Entry hazard lamp answerback function or the Room Lamp Answerback Function does not Work Normally.

⚠ CAUTION

Whenever the ECU is replaced, ensure that the input and output signal circuits are normal.

COMMENTS ON TROUBLE SYMPTOM

If the hazard warning lamp and the room lamp work normally, the ETACS-ECU may be defective. Alternatively, it is possible that the keyless entry hazard lamp answerback function was disabled by the adjustment function.

POSSIBLE CAUSES

- Defective turn-signal lamp
- Malfunction of the room lamp
- Malfunction of the ETACS-ECU
- Damaged harness wires and connectors

DIAGNOSIS PROCEDURE

Step 1. Check the adjustment function.

Check that the keyless entry hazard lamp answerback function has been enabled by using the adjustment function.

Q: Is the check result normal?

YES : Go to Step 2.

NO : Enable the keyless entry hazard lamp answerback function by using the adjustment function. (Refer to P.54B-393.)

Step 2. Check the operation of the hazard warning lamp.

Check that the hazard warning lamps illuminate normally.

Q: Is the check result normal?

YES : Go to Step 3.

NO : Refer to inspection procedure K-2 "The hazard warning lamps do not illuminate P.54B-240".

Step 3. Check the operation of the room lamps.

Check that the room lamps illuminate normally.

Q: Is the check result normal?

YES : Go to Step 4.

NO : Refer to inspection procedure M-2 "The front or rear room lamp does not illuminate/extinguish P.54B-287."

Step 4. Retest the system.

Check that the keyless entry hazard lamp answerback function or the room lamp answerback function work normally.

Q: Is the check result normal?

YES : The trouble can be an intermittent malfunction (Refer to GROUP 00 – How to Cope with Intermittent Malfunction P.00-6).

NO : Replace the ETACS-ECU.

INSPECTION PROCEDURE E-3: Encrypted Code cannot be Registered.

⚠ CAUTION
Whenever the ECU is replaced, ensure that the input and output signal circuits are normal.

Encrypted Transmitter Code Register Mode

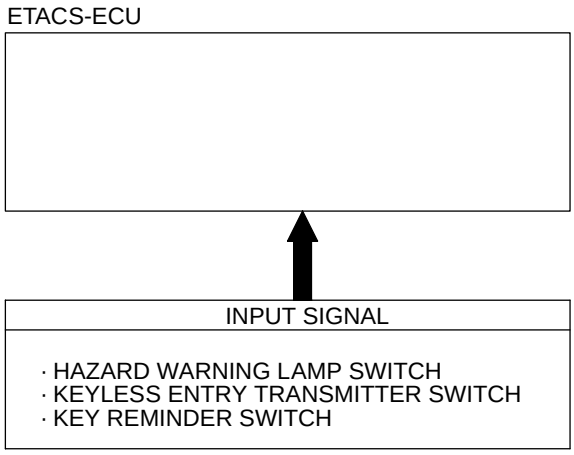

W3Z16E05AA

COMMENTS ON TROUBLE SYMPTOM

If the encrypted code registration mode is not entered, the key reminder switch, the hazard warning lamp switch or the ETACS-ECU may be defective.
If the registration is not possible although the registration mode is entered, the keyless entry transmitter or the ETACS-ECU may be defective.

POSSIBLE CAUSES

- Malfunction of the keyless entry transmitter
- Malfunction of the ETACS-ECU
- Damaged harness wires and connectors

DIAGNOSIS PROCEDURE

Step 1. Check the encrypted code registration mode.
Check that the encrypted code registration mode is entered.

Q: Is the check result normal?
YES : Go to Step 3.
NO : Go to Step 2.

Step 2. Pulse check
Check the input signals below which are related to the encrypted code of the keyless entry transmitter.

System switch	Check condition
Key reminder switch	When the inserted ignition key is pulled out
Hazard warning lamp switch	When the switch is turned from off to on
Keyless entry transmitter switch	When the switch is turned from off to on

OK: The MUT-II/III sounds or the voltmeter needle fluctuates.

Q: Is the check result normal?

All the signals are received normally. : Go to Step 3.

The key reminder switch signal is not received. : Refer to inspection procedure N-9 "The key reminder switch signal is not received P.54B-334."

The hazard warning lamp switch signal is not received. : Refer to inspection procedure N-10 "The hazard warning lamp switch signal is not received P.54B-338."

The keyless entry transmitter switch signal is not received. : Refer to inspection procedure N-14 "Each switch signal of the keyless entry transmitter is not received P.54B-366."

Step 3. Retest the system.
Check that the encrypted code can be registered.

Q: Is the check result normal?
YES : The trouble can be an intermittent malfunction (Refer to GROUP 00 – How to Cope with Intermittent Malfunction P.00-6).
NO : Replace the ETACS-ECU.

INSPECTION PROCEDURE E-4: The Timer Lock Function does not Work after the Doors have been Unlocked by the Keyless Entry System.

⚠ CAUTION
Whenever the ECU is replaced, ensure that the input and output signal circuits are normal.

COMMENT ON TROUBLE SYMPTOM
If the keyless entry timer lock does not work normally, the input signal circuit(s) to the keyless entry transmitter or the ETACS-ECU may be defective.

POSSIBLE CAUSES
- Malfunction of the keyless entry transmitter
- Malfunction of the ETACS-ECU
- Damaged harness wires and connectors

DIAGNOSIS PROCEDURE

Step 1. Check the operation of the keyless entry system.
Check that the keyless entry system works normally.

Q: Is the check result normal?
YES : Go to Step 2.
NO : Refer to inspection procedure E-1 "Keyless entry system does not work P.54B-148."

Step 2. Retest the system.
Check that the timer lock works normally.

Q: Is the check result normal?
YES : The trouble can be an intermittent malfunction (Refer to GROUP 00 – How to Cope with Intermittent Malfunction P.00-6).
NO : Replace the ETACS-ECU.

WINDSHIELD WIPER AND WASHER

INSPECTION PROCEDURE F-1: The windshield wipers does not work at all.

⚠ CAUTION

Whenever the ECU is replaced, ensure that the input and output signal circuits are normal.

Windshield Wiper Power Supply Circuit <LHD>

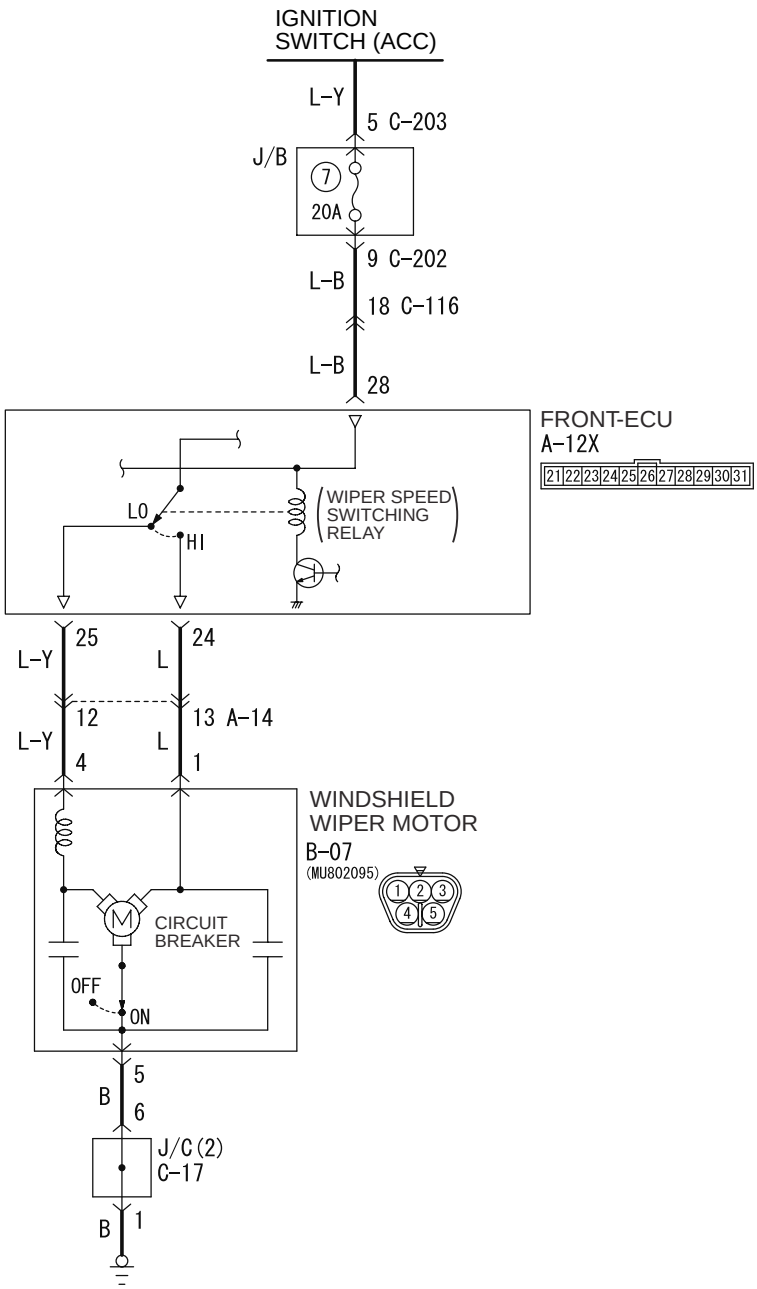

Wire colour code
B : Black LG : Light green G : Green L : Blue W : White Y : Yellow SB : Sky blue
BR : Brown O : Orange GR : Gray R : Red P : Pink V : Violet

W3Z04E01AB

Windshield Wiper Power Supply Circuit <RHD>

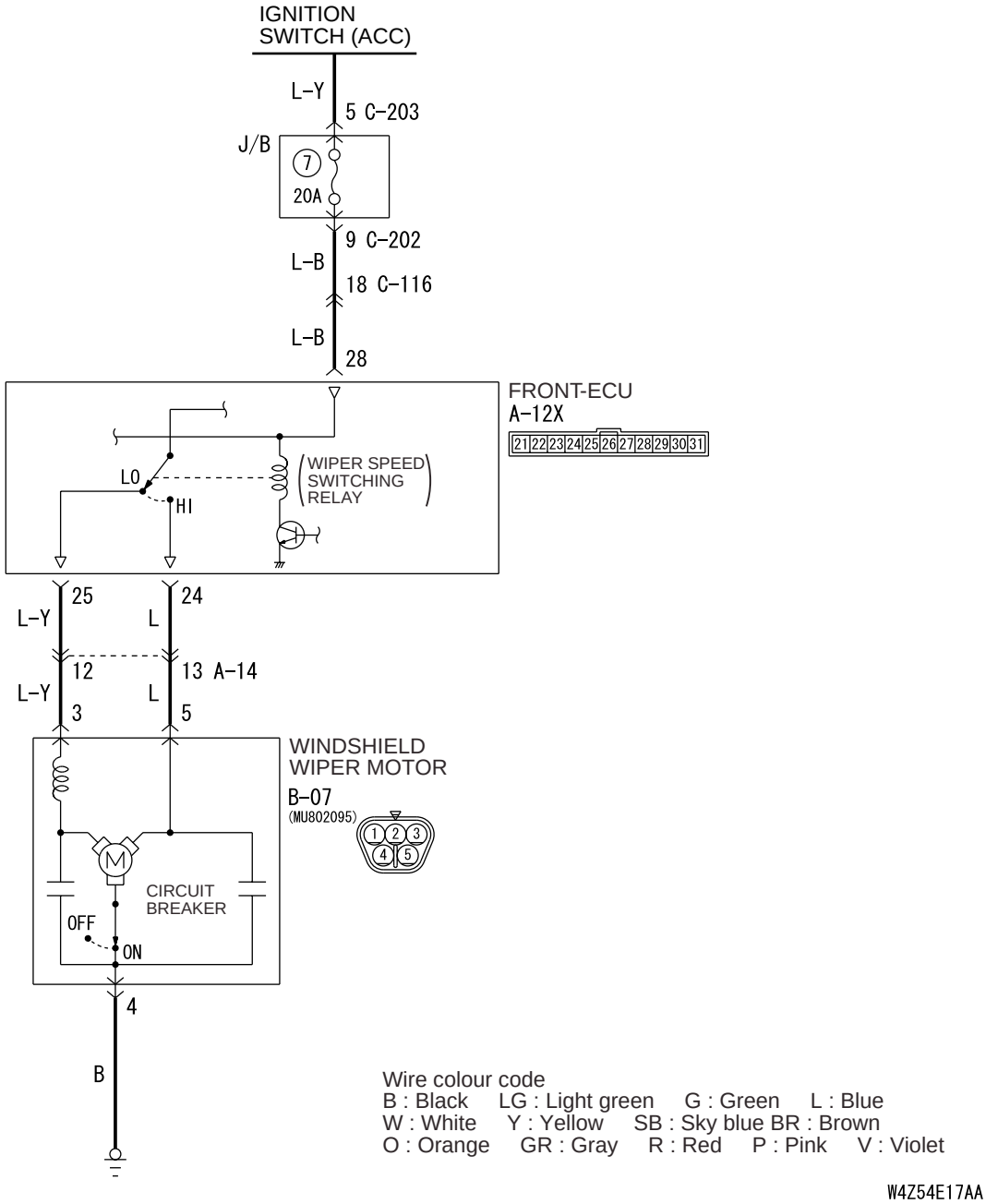

COMMENTS ON TROUBLE SYMPTOM

The windshield wiper motor, the column switch or the front-ECU may be defective.

POSSIBLE CAUSES

- Malfunction of the windshield wiper motor
- Malfunction of the column switch
- Malfunction of the front-ECU
- Damaged harness wires and connectors

DIAGNOSTIC PROCEDURE

Step 1. Check the diagnosis code.
When the ignition switch is turned to the LOCK (OFF) position, check that the ETACS-ECU does not set the diagnosis code.

Q: Is the diagnosis code set?
YES : Refer to diagnosis code chart P.54B-17.
NO : Go to Step 2.

Step 2. Pulse check
Check the input signals below which are related to the windshield wiper.

System switch	Check condition
Ignition switch (ACC)	When turned from the LOCK (OFF) position to the ACC position.
Windshield mist wiper switch	When the switch is turned from off to on.

OK: The MUT-II/III sounds or the voltmeter needle fluctuates.

Q: Is the check result normal?
All the signals are received normally : Go to Step 3.
The ignition switch (ACC) signal is not received. : Refer to inspection procedure N-1 "The ignition switch (ACC) signal is not received P.54B-298."
Windshield mist wiper switch signal is not received. : Refer to inspection procedure N-6 "The column switch (windshield wiper washer and rear wiper washer switch) signal is not received P.54B-320."

Step 3. Connector check: B-07 windshield wiper motor connector

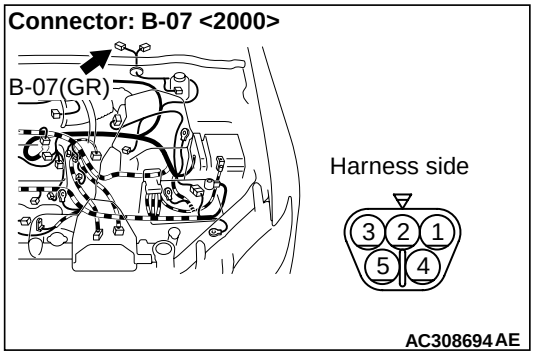

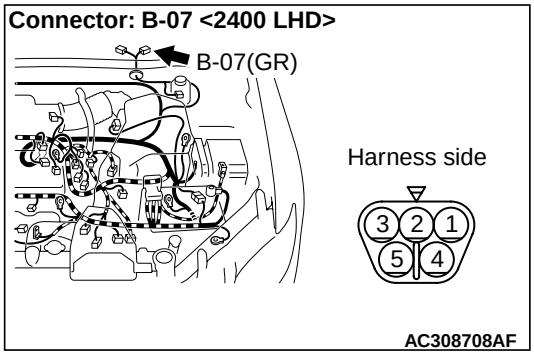

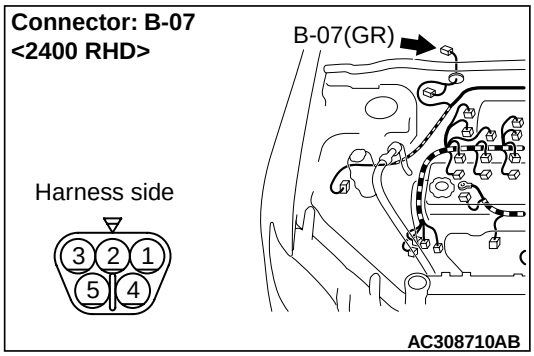

Q: Is the check result normal?
YES : Go to Step 4.
NO : Repair the connector.

Step 4. Check the windshield wiper motor assembly.
Refer to GROUP 51 – Windshield wiper P.51-22.

Q: Is the check result normal?
YES : Go to Step 5
NO : Replace the windshield wiper motor assembly.

Step 5. Measure the resistance at the B-07 windshield wiper motor connector.

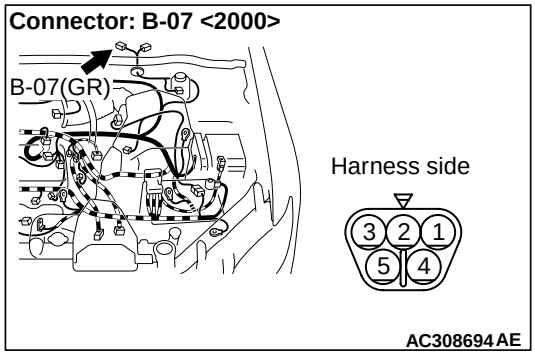

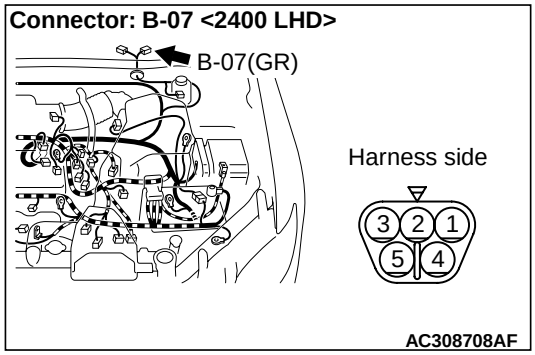

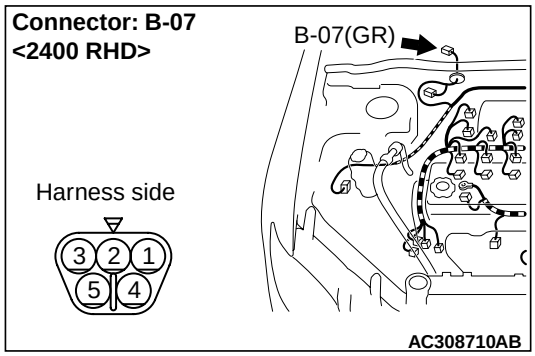

(1) Disconnect the connector, and measure at the wiring harness side.

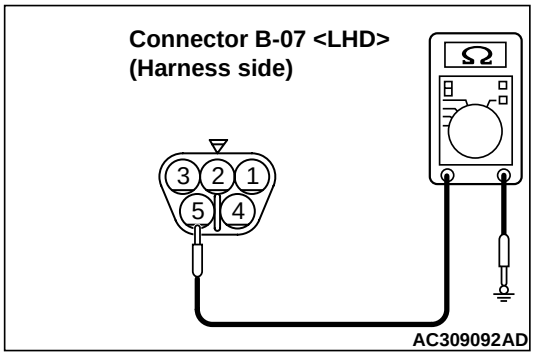

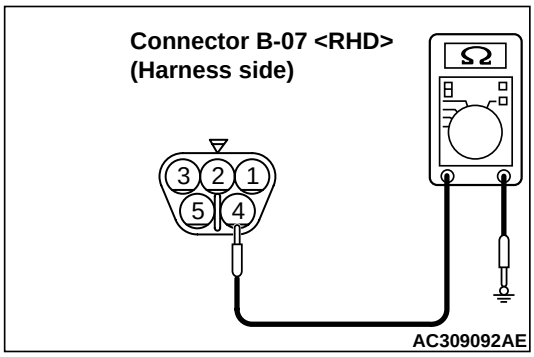

(2) Continuity between B-07 windshield wiper motor connector terminal No.5 <L.H. drive vehicles> or No.4 <R.H. drive vehicles>, and body earth

OK: 2Ω or less

Q: Is the check result normal?
YES : Go to Step 7.
NO : Go to Step 6.

Step 6. Check the wiring harness between B-07 windshield wiper motor connector terminal No.5 and body earth.

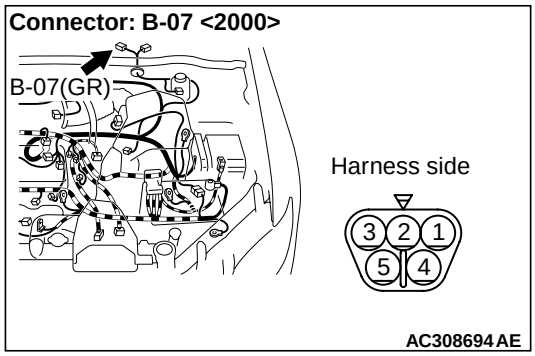

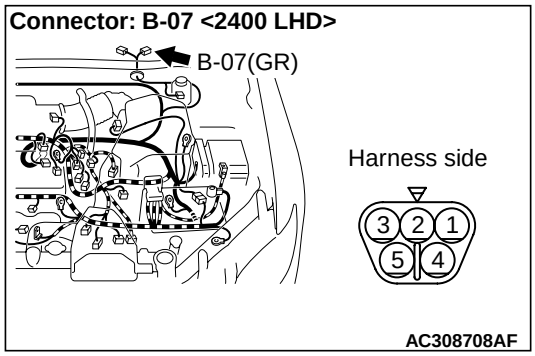

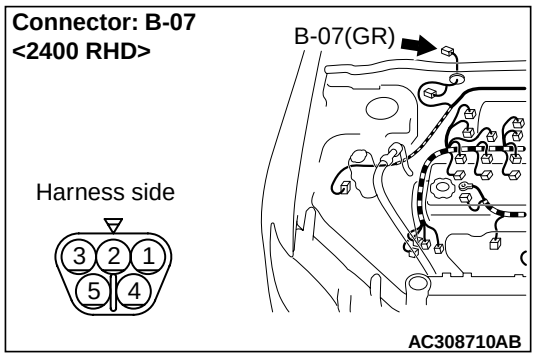

NOTE:

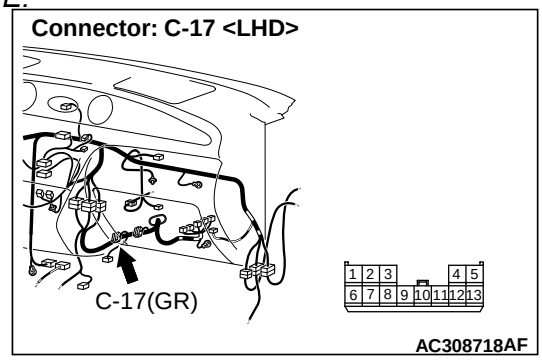

Prior to the wiring harness inspection, check the junction connector C-17 <L.H. drive vehicles>, and repair if necessary.

- Check the earth wires for open circuit.

Q: Is the check result normal?

YES : The trouble can be an intermittent malfunction (Refer to GROUP 00 – How to Cope with Intermittent Malfunction P.00-6).

NO : Repair the wiring harness.

Step 7. Connector check: A-12X front-ECU connector

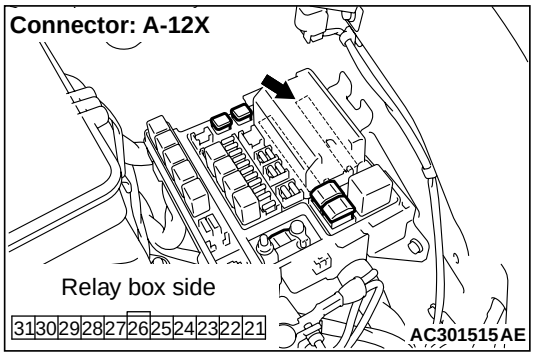

Q: Is the check result normal?

YES : Go to Step 8.

NO : Repair the connector.

Step 8. Measure the voltage at the A-12X front-ECU connector.

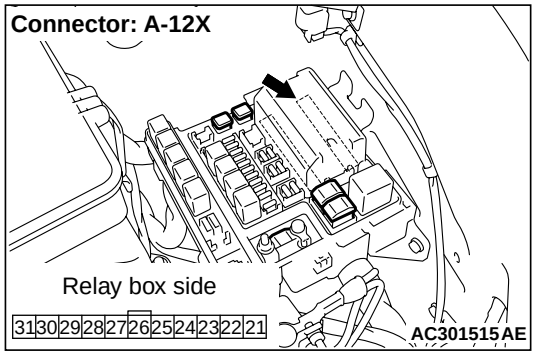

(1) Remove the front-ECU, and measure at the relay box side.
(2) Ignition switch: ACC

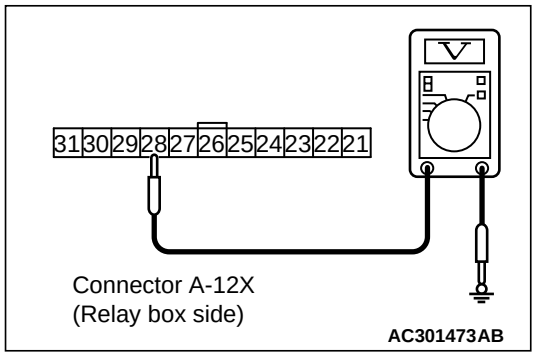

(3) Check the voltage between the A-12X front-ECU connector terminal No.28 and body earth.

OK: System voltage

Q: Is the check result normal?
YES : Go to Step 10.
NO : Go to Step 9.

Step 9. Check the wiring harness between A-12X front-ECU connector terminal No.28 and the ignition switch (ACC).

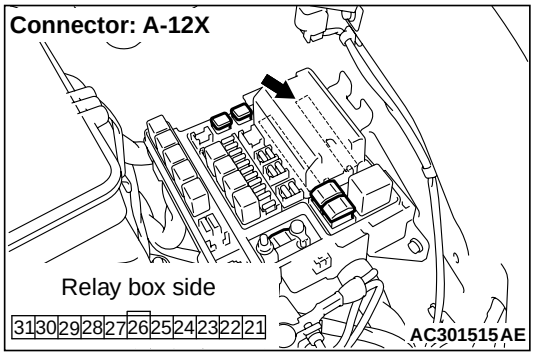

NOTE:

Connector: C-116 <LHD>

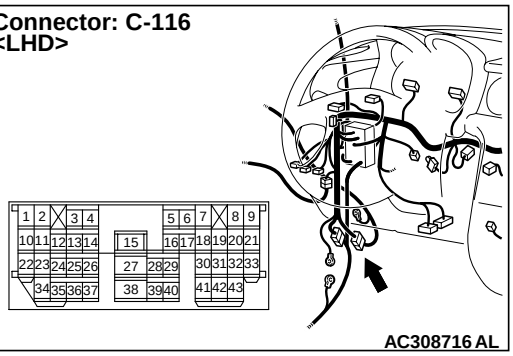

AC308716 AL

Connectors; C-116 <RHD>

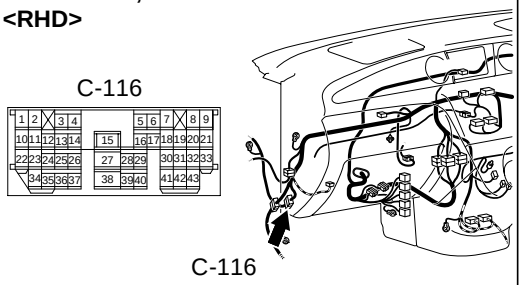

AC308735 AK

Connectors: C-202, C-203 <LHD>
Junction block (Front view)

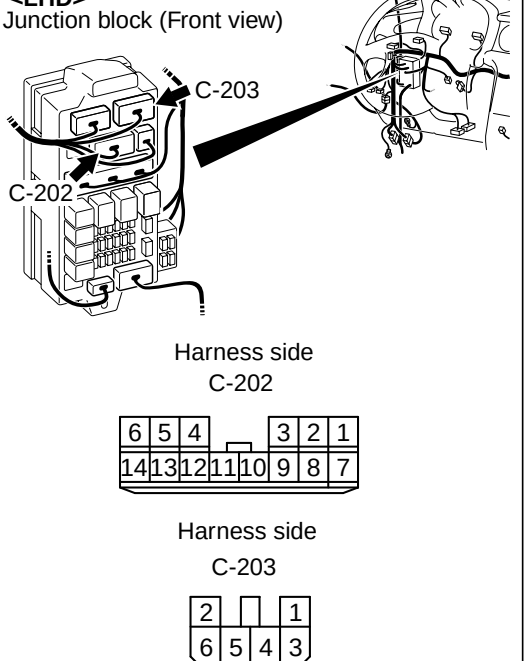

AC308721AC

Connectors: C-202, C-203 <RHD>
Junction block (Front view)

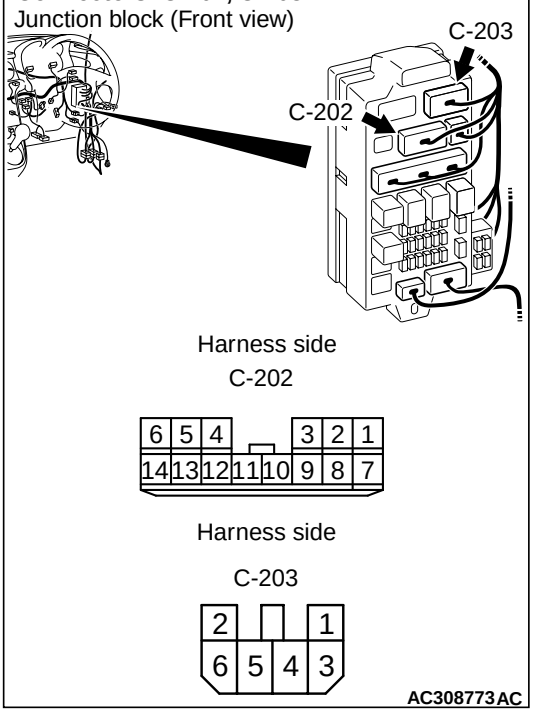

AC308773AC

Prior to the wiring harness inspection, check the junction block connectors C-202, C-203 and intermediate connector C-116 and repair if necessary.

- Check the power supply line to the ignition switch (ACC) for open circuit.

Q: Is the check result normal?

YES : The trouble can be an intermittent malfunction (Refer to GROUP 00 – How to Cope with Intermittent Malfunction P.00-6).

NO : Repair the wiring harness.

Step 10. Connector check: C-310 column switch connector

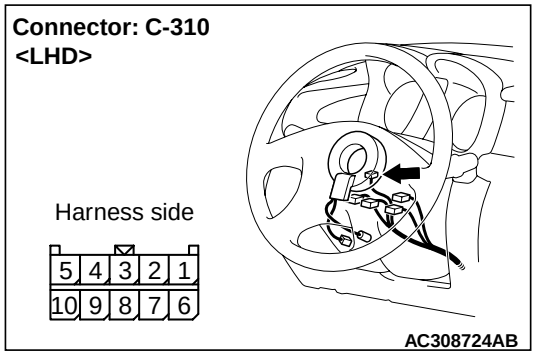

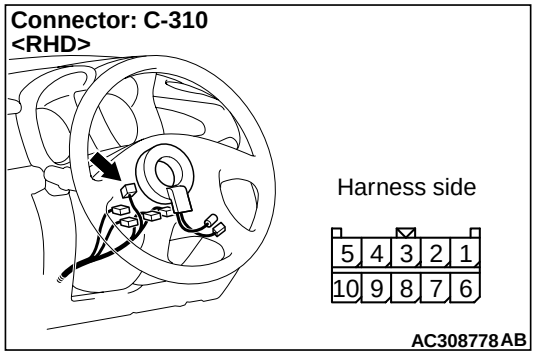

Q: Is the check result normal?
YES : Go to Step 11.
NO : Repair the connector.

Step 11. Check the wiring harness between C-310 column switch connector terminal No.8 and A-12X front-ECU connector terminal No.26.

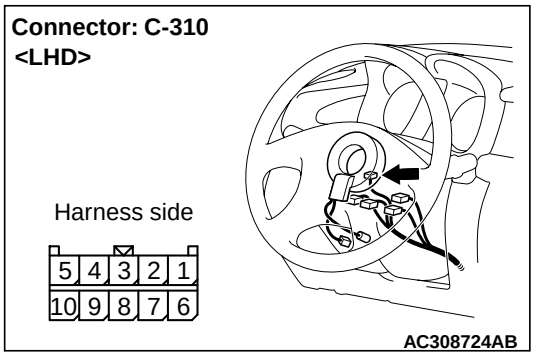

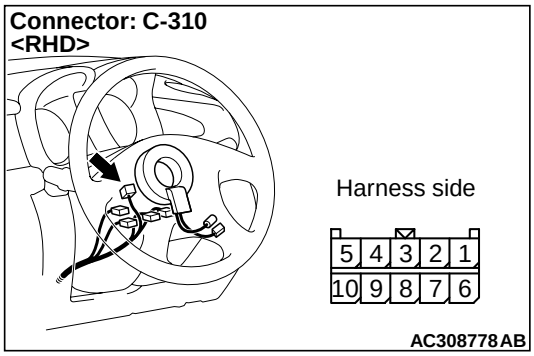

NOTE:

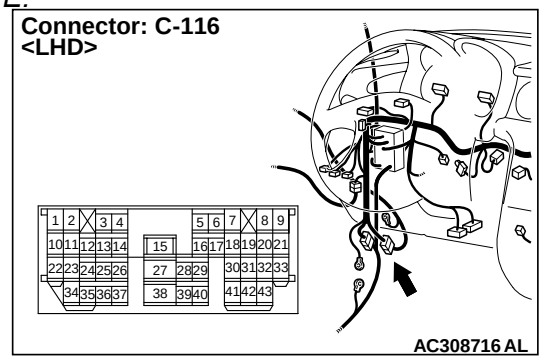

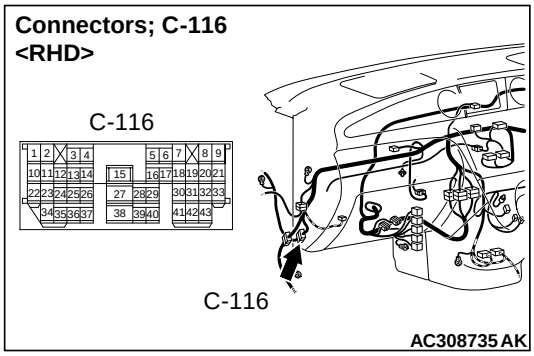

Prior to the wiring harness inspection, check the intermediate connector C-116 and repair if necessary.

- Check the wiper backup circuit.

Q: Is the check result normal?
YES : Go to Step 12.
NO : Repair the wiring harness.

Step 12. Retest the system.
The windshield wiper should now work normally at all.

Q: Is the check result normal?

YES : The trouble can be an intermittent malfunction (Refer to GROUP 00 – How to Cope with Intermittent Malfunction P.00-6).
NO : Replace the front-ECU.

INSPECTION PROCEDURE F-2: The windshield wipers does not work when the wiper switch is at "INT", "WASHER" or "MIST" position. However, the wipers work at low speed when the switch is at "LO" and "HI" position.

⚠ CAUTION
Whenever the ECU is replaced, ensure that the input and output signal circuits are normal.

Windshield Wiper Motor Drive Circuit <LHD>

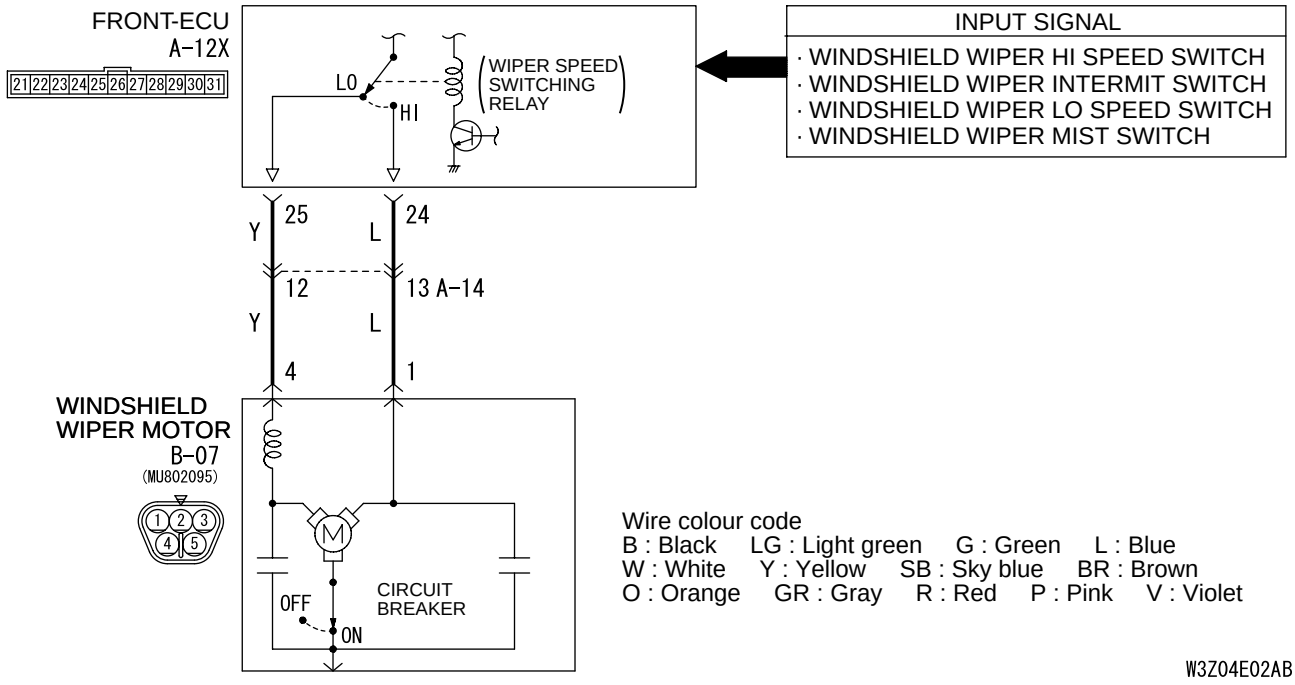

Windshield Wiper Motor Drive Circuit <RHD>

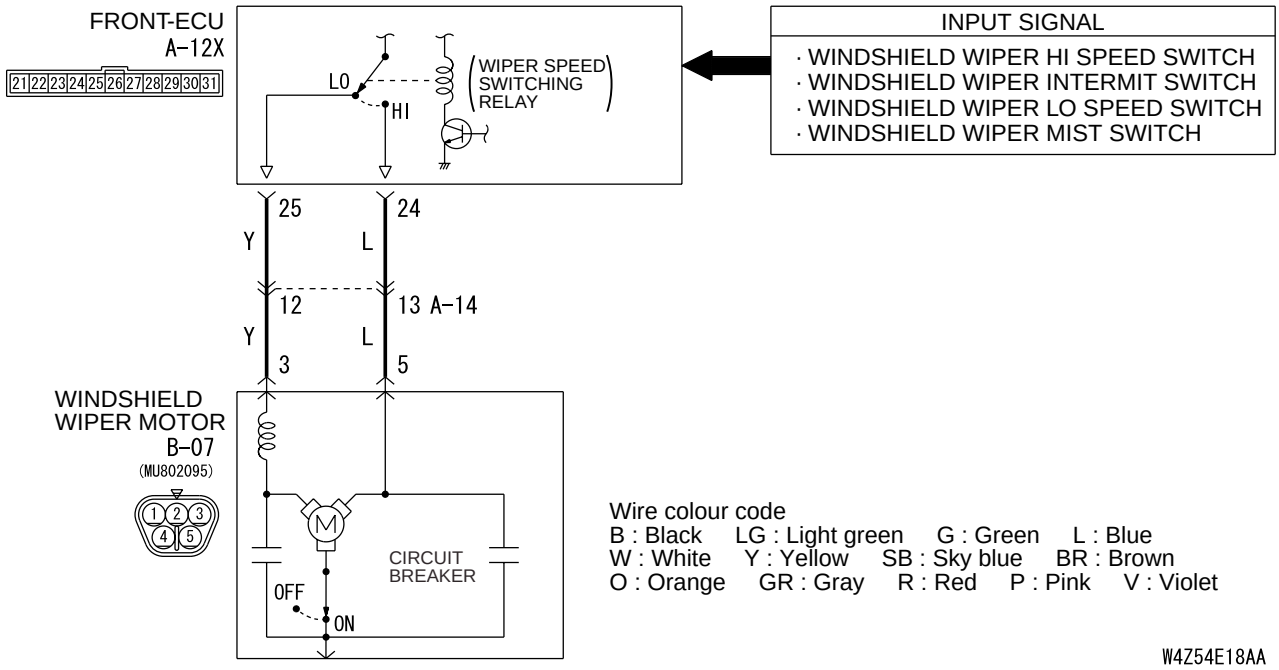

COMMENTS ON TROUBLE SYMPTOM

The system may be at fail-safe mode as the SWS communication line is defective. If the front-ECU does not receive the ignition switch (ACC) signal due to an open circuit in the SWS communication lines or other reasons when the ignition switch is at the ACC position, the system will enter the fail-safe mode.

POSSIBLE CAUSES

- Malfunction of the column switch
- Malfunction of the front-ECU
- Damaged harness wires and connectors

DIAGNOSTIC PROCEDURE

Step 1. Check the diagnosis code.

When the ignition switch is turned to the LOCK (OFF) position, check that the ETACS-ECU does not set the diagnosis code.

Q: Is the diagnosis code set?

YES : Refer to diagnosis code chart P.54B-17.

NO : Go to Step 2.

Step 2. Pulse check

Check the input signals below which are related to the windshield wiper.

System switch	Check condition
Ignition switch (ACC)	When turned from the LOCK (OFF) position to the ACC position.
Windshield mist wiper switch	When the switch is turned from off to on.

OK: The MUT-II/III sounds or the voltmeter needle fluctuates.

Q: Is the check result normal?

All the signals are received normally : Go to Step 3.

The ignition switch (ACC) signal is not received. : Refer to inspection procedure N-1 "The ignition switch (ACC) signal is not received P.54B-298."

Windshield mist wiper switch signal is not received. : Refer to inspection procedure N-6 "The column switch (windshield wiper washer and rear wiper washer switch) signal is not received P.54B-320."

Step 3. Retest the system.
The windshield wiper should now work normally.

Q: Is the check result normal?

YES : The trouble can be an intermittent malfunction (Refer to GROUP 00 – How to Cope with Intermittent Malfunction P.00-6).
NO : Replace the front-ECU.

INSPECTION PROCEDURE F-3: The windshield wipers do not stop at the specified park position

⚠ CAUTION
Whenever the ECU is replaced, ensure that the input and output signal circuits are normal.

Windshield Wiper Automatic Stop Relay Circuit <LHD>

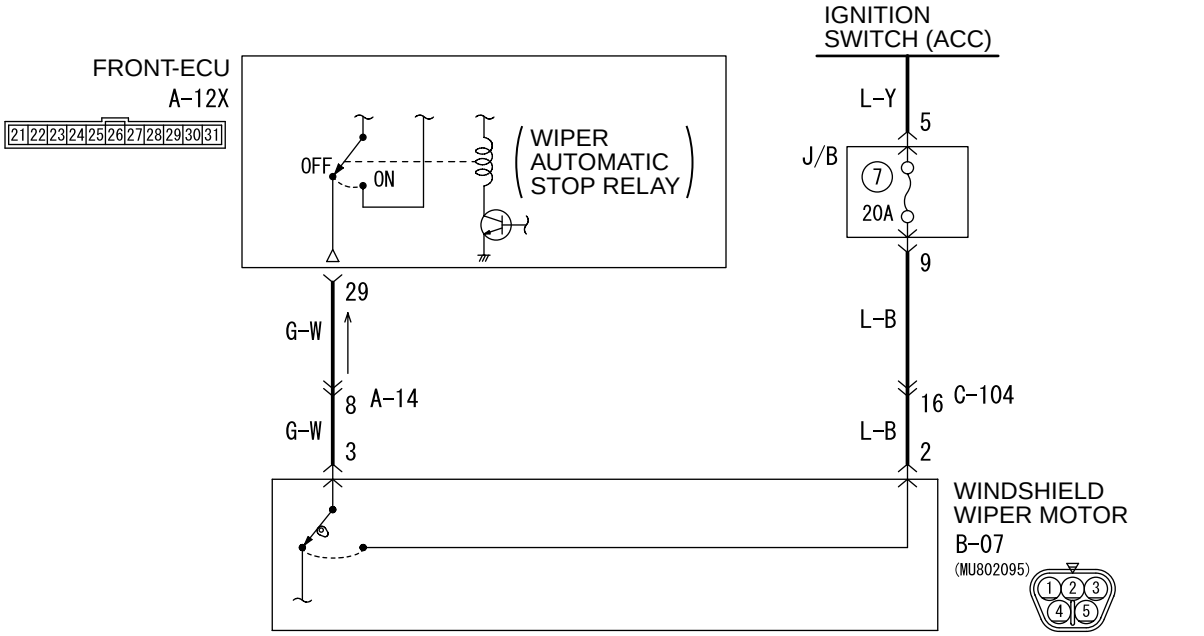

Wire colour code
B : Black LG : Light green G : Green L : Blue W : White Y : Yellow SB : Sky blue
BR : Brown O : Orange GR : Gray R : Red P : Pink V : Violet

W3Z04E05AB

Windshield Wiper Automatic Stop Relay Circuit <RHD>

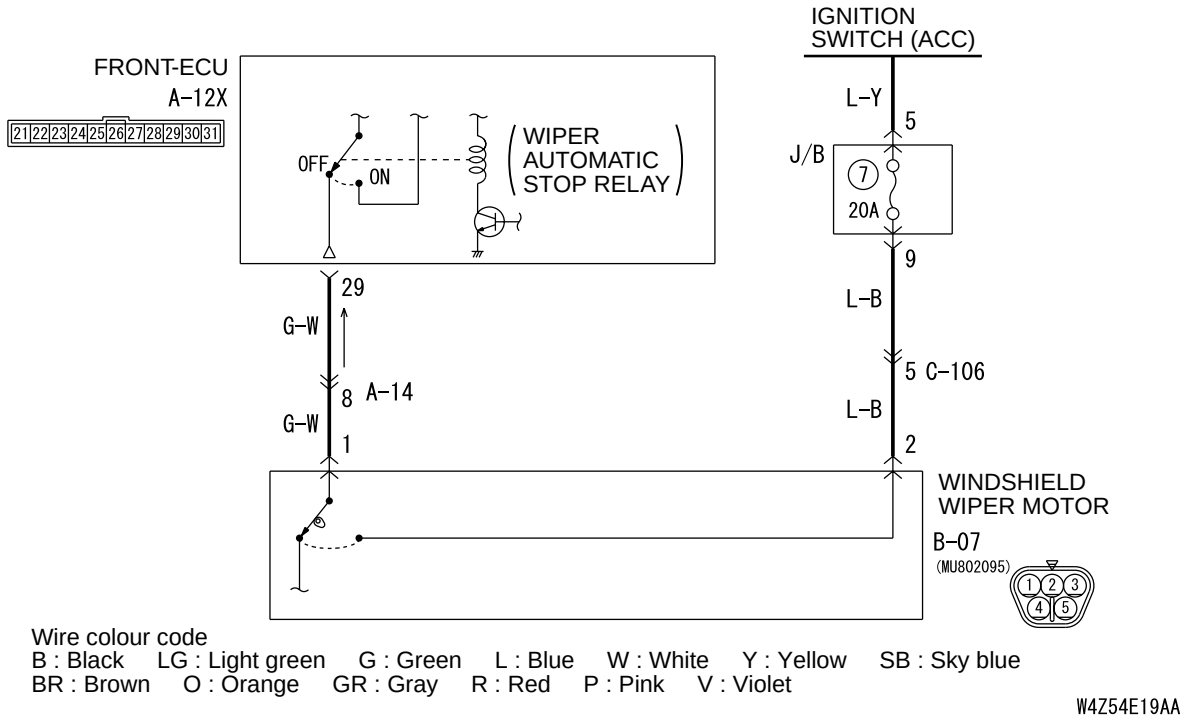

Wire colour code
B : Black LG : Light green G : Green L : Blue W : White Y : Yellow SB : Sky blue
BR : Brown O : Orange GR : Gray R : Red P : Pink V : Violet

W4Z54E19AA

COMMENTS ON TROUBLE SYMPTOM

The windshield wiper motor or the front-ECU may be defective.

POSSIBLE CAUSES

- Malfunction of the windshield wiper motor
- Malfunction of the front-ECU
- Damaged harness wires and connectors

DIAGNOSTIC PROCEDURE

Step 1. Connector check: B-07 windshield wiper motor connector

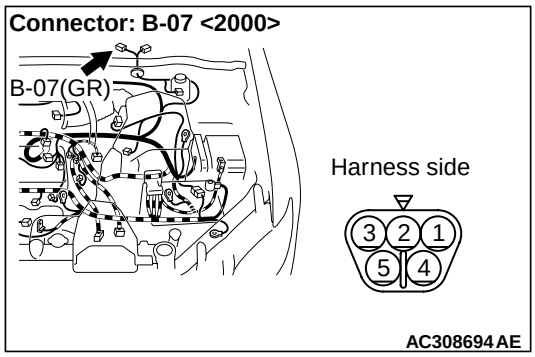

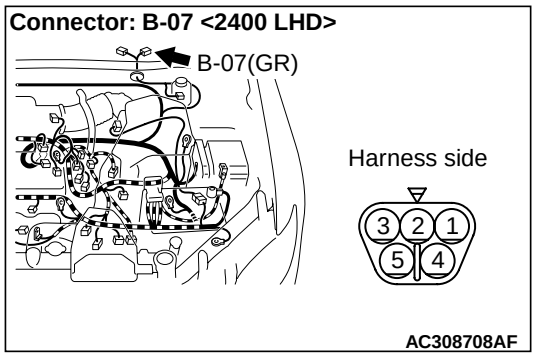

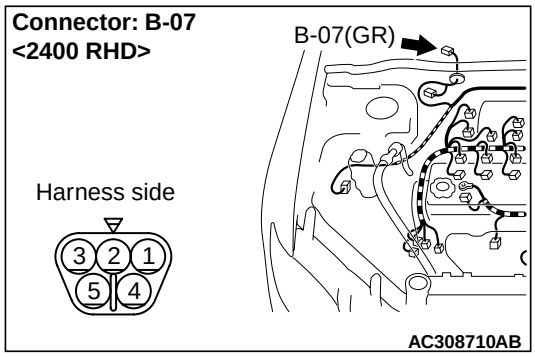

Q: Is the check result normal?
YES : Go to Step 2.
NO : Repair the connector.

Step 2. Check the windshield wiper motor assembly.

Refer to GROUP 51 – Windshield wiper P.51-22.

Q: Is the check result normal?
YES : Go to Step 3
NO : Replace the windshield wiper motor assembly.

Step 3. Measure the voltage at the B-07 windshield wiper motor connector.

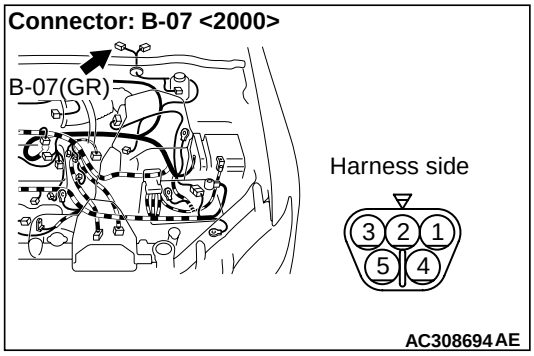

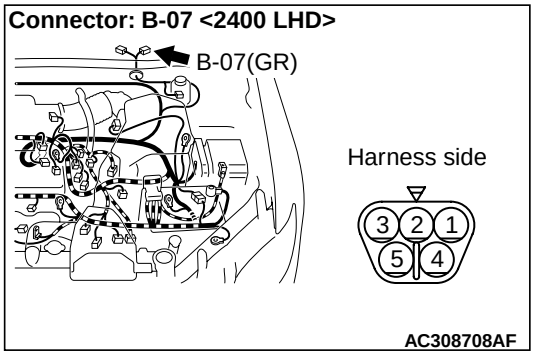

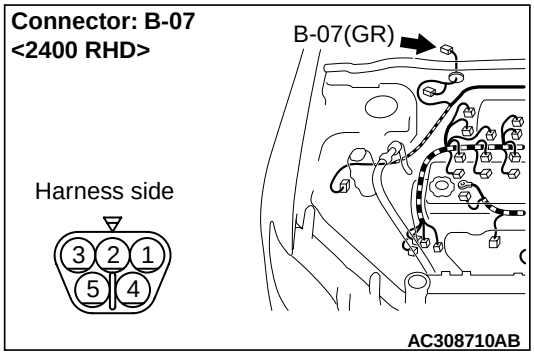

(1) Disconnect the connector, and measure at the wiring harness side.
(2) Ignition switch: ACC

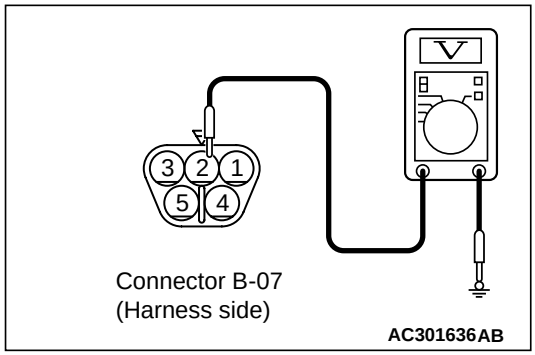

(3) Check the voltage between the B-07 windshield wiper motor connector terminal No.2 and body earth.

OK: System voltage

Q: Is the check result normal?
YES : Go to Step 5.
NO : Go to Step 4.

Step 4. Check the wiring harness between B-07 windshield wiper motor connector terminal No.2 and ignition switch (ACC).

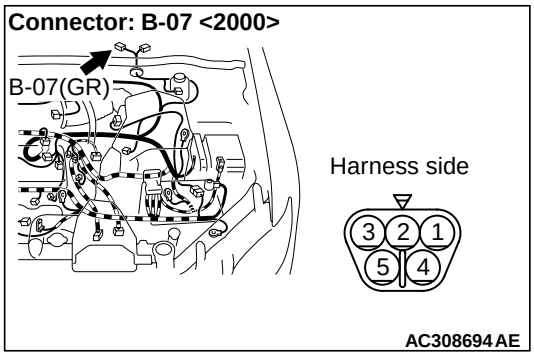

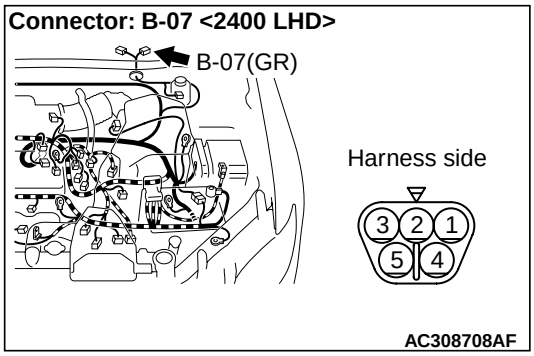

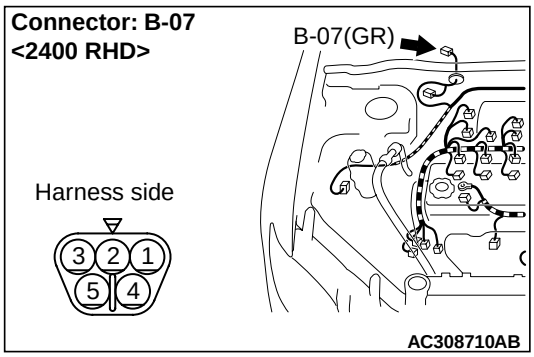

NOTE:

Connector: C-104, C-106 <LHD>

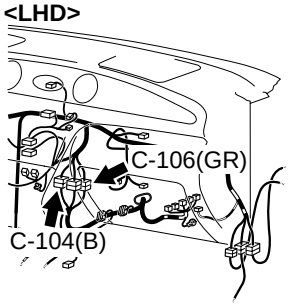

C-104

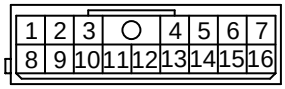

C-106

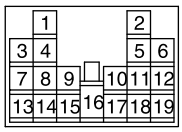

AC308719AC

Connector: C-104, C-106 <RHD>

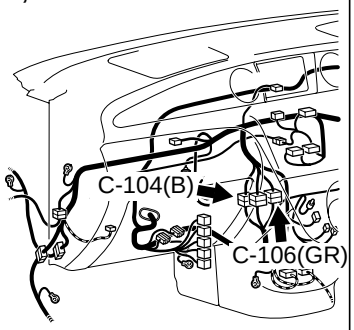

C-104

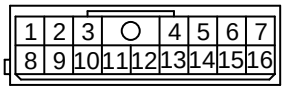

C-106

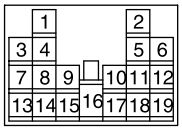

AC308736AD

Connectors: C-202, C-203 <LHD>
Junction block (Front view)

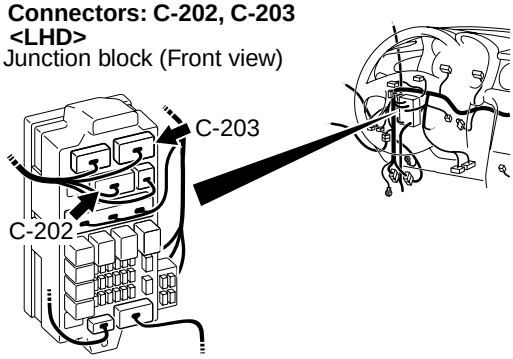

Harness side
C-202

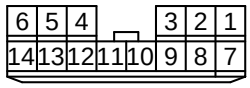

Harness side
C-203

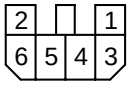

AC308721AC

Connectors: C-202, C-203 <RHD>
Junction block (Front view)

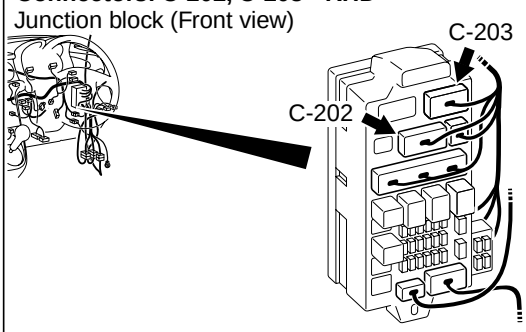

Harness side
C-202

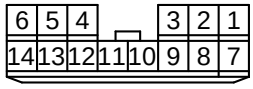

Harness side
C-203

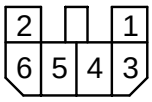

AC308773AC

Prior to the wiring harness inspection, check the junction connectors C-202, C-203, the intermediate connectors C-104 and C-106, and repair if necessary.

- Check the power supply line to ignition switch (ACC) for open circuit.

Q: Is the check result normal?
YES : The trouble can be an intermittent malfunction (Refer to GROUP 00 – How to Cope with Intermittent Malfunction P.00-6).
NO : Repair the wiring harness.

Step 5. Connector check: A-12X front-ECU connector

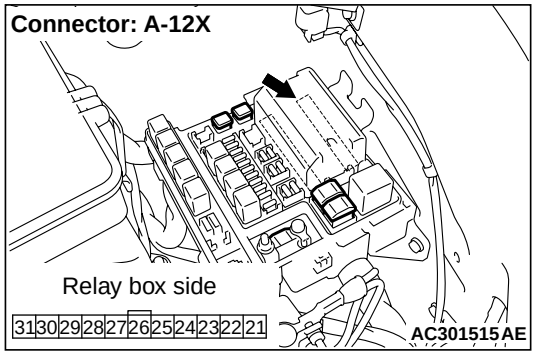

Q: Is the check result normal?
YES : Go to Step 6.
NO : Repair the connector.

Step 6. Check the wiring harness between B-07 windshield wiper motor connector terminal No.3 <L.H. drive vehicles> or terminal No.1 <R.H. drive vehicles> and A-12X front-ECU connector terminal No.29.

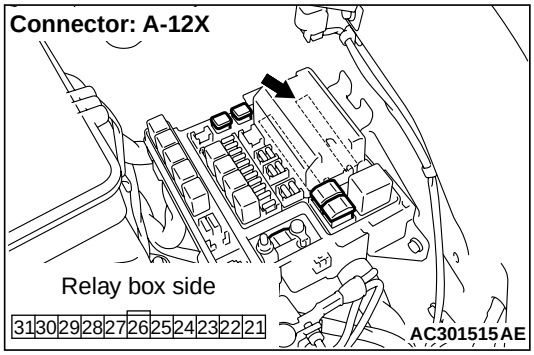

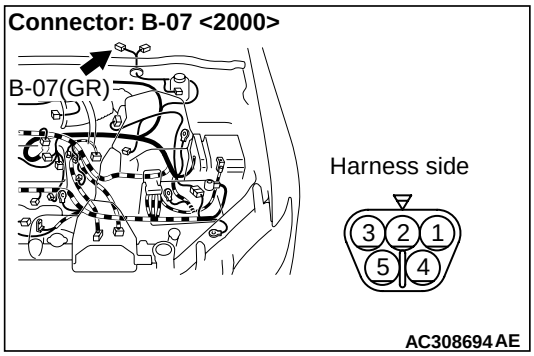

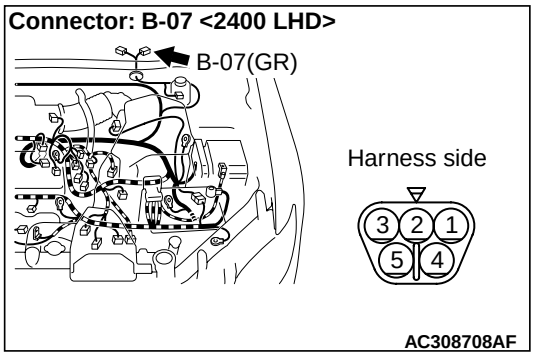

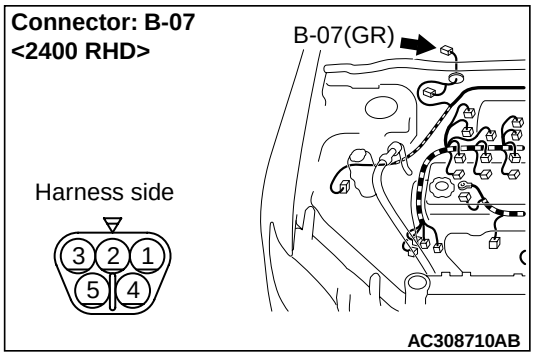

NOTE:

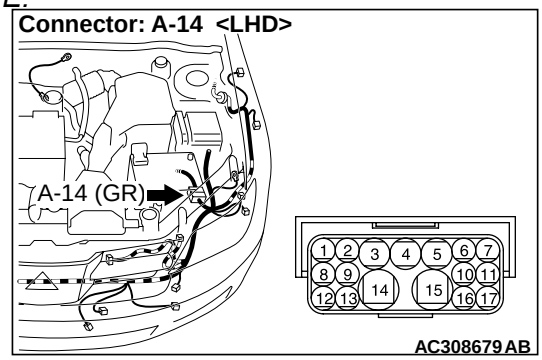

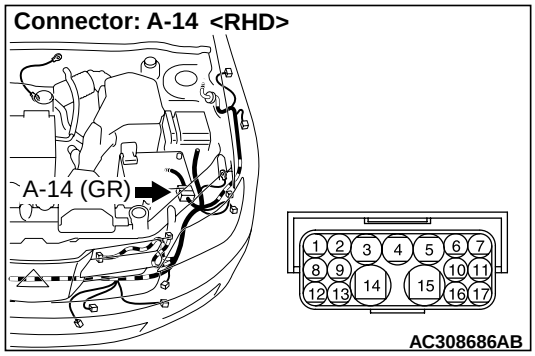

Prior to the wiring harness inspection, check the intermediate connector A-14 and repair if necessary.

- Check the input signal lines.

Q: Is the check result normal?

YES : Go to Step 7.
NO : Repair the wiring harness.

Step 7. Retest the system.
Check that the windshield wipers stop at the specified park position.

Q: Is the check result normal?
YES : The trouble can be an intermittent malfunction (Refer to GROUP 00 – How to Cope with Intermittent Malfunction P.00-6).
NO : Replace the front-ECU.

INSPECTION PROCEDURE F-4: The windshield wipers does not work normally.

⚠ CAUTION

Whenever the ECU is replaced, ensure that the input and output signal circuits are normal.

Windshield Wiper Motor Drive Circuit <LHD>

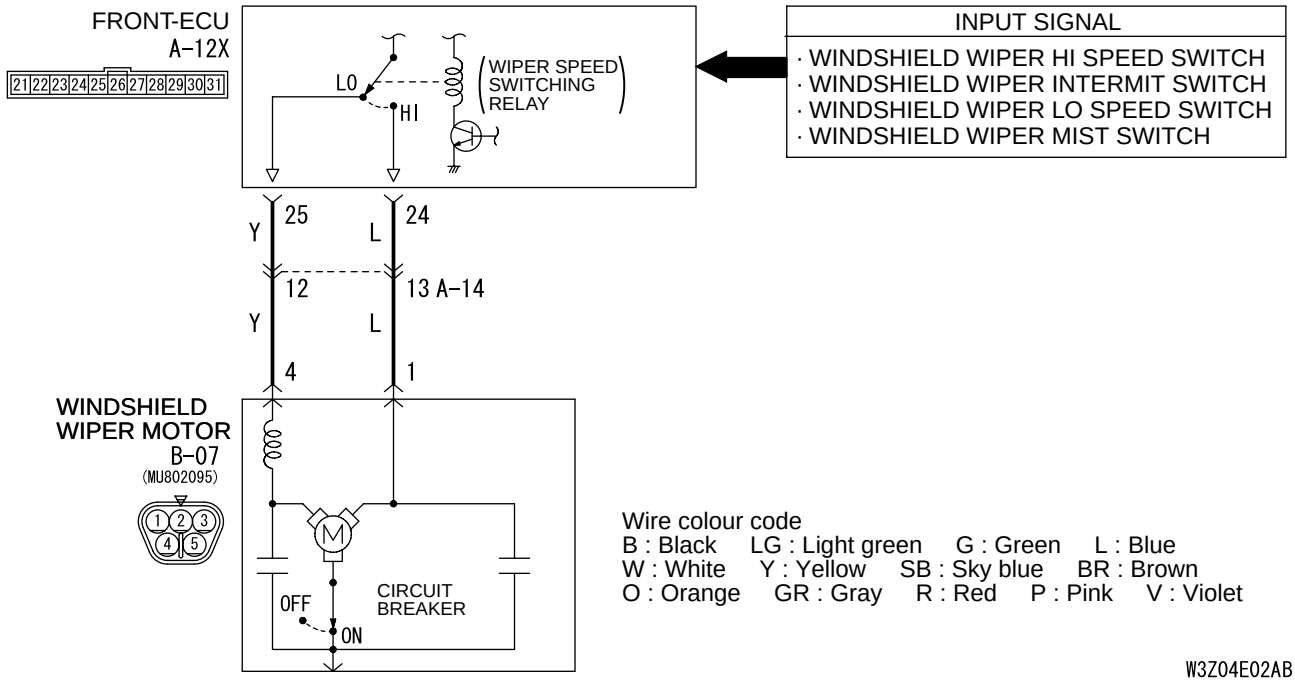

Windshield Wiper Motor Drive Circuit <RHD>

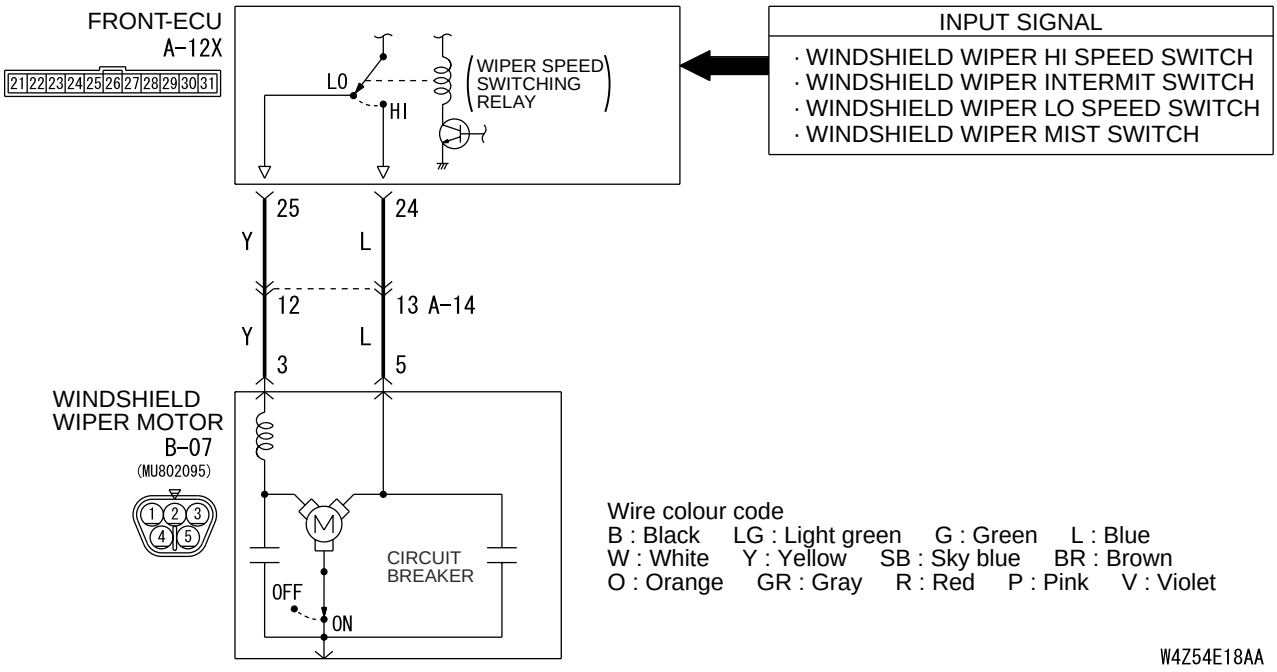

COMMENTS ON TROUBLE SYMPTOM

The windshield wiper motor, the column switch or the front-ECU may be defective.

POSSIBLE CAUSES

- Malfunction of the windshield wiper motor
- Malfunction of the column switch
- Malfunction of the front-ECU
- Damaged harness wires and connectors

Step 1. Pulse check

Check the input signals below which are related to the windshield wiper.

System switch	Check condition
Ignition switch (ACC)	When turned from the LOCK (OFF) position to the ACC position.
Windshield mist wiper switch	When the switch is turned from off to on.
Windshield intermittent wiper switch	When the switch is turned from off to on.
Windshield low-speed wiper switch	When the switch is turned from off to on.
Windshield high-speed wiper switch	When the switch is turned from off to on.

OK: The MUT-II/III sounds or the voltmeter needle fluctuates.

Q: Is the check result normal?

All the signals are received normally : Go to Step 2.

The ignition switch (ACC) signal is not received. : Refer to inspection procedure N-1 "The ignition switch (ACC) signal is not received P.54B-298."

Windshield mist wiper switch signal is not received. : Refer to inspection procedure N-6 "The column switch (windshield wiper washer and rear wiper washer switch) signal is not received P.54B-320."

Windshield intermittent wiper switch signal is not received. : Refer to inspection procedure N-6 "The column switch (windshield wiper washer and rear wiper washer switch) signal is not received P.54B-320."

Windshield low-speed wiper switch signal is not received. : Refer to inspection procedure N-6 "The column switch (windshield wiper washer and rear wiper washer switch) signal is not received P.54B-320."

Windshield high-speed wiper switch signal is not received. : Refer to inspection procedure N-6 "The column switch (windshield wiper washer and rear wiper washer switch) signal is not received P.54B-320."

Step 2. Check the operation of the windshield wipers.

Check that the windshield wipers work at high speed and the mist mode.

Q: Is the check result normal?

YES : Go to Step 3.

NO : Go to Step 9.

Step 3. Connector check: B-07 windshield wiper motor connector

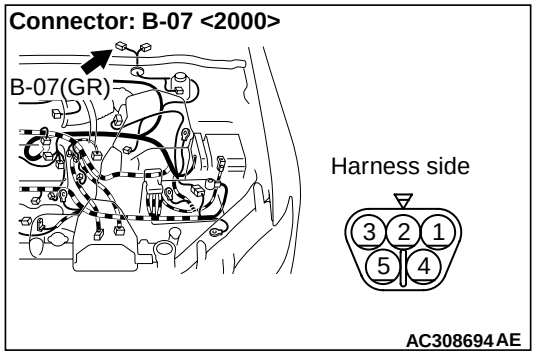

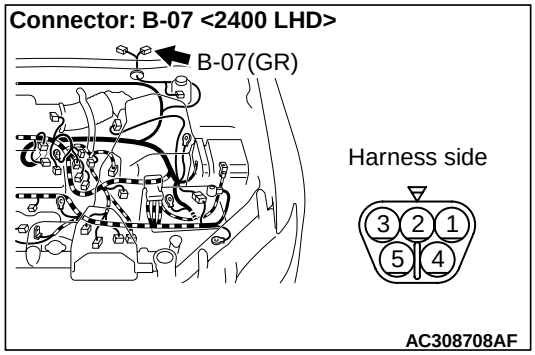

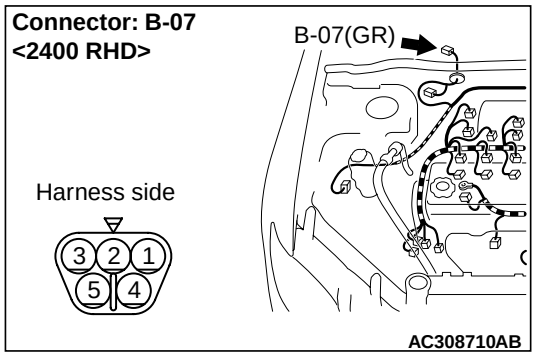

Q: Is the check result normal?
YES : Go to Step 4.
NO : Repair the defective connector.

Step 4. Measure the voltage at the B-07 windshield wiper motor connector.

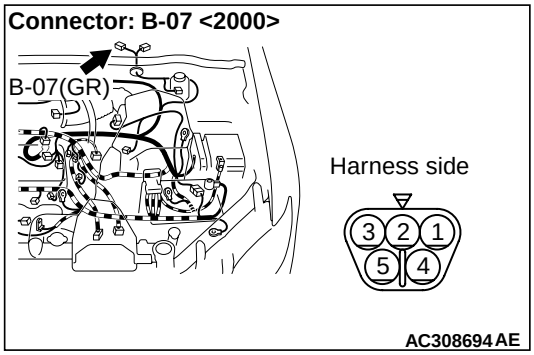

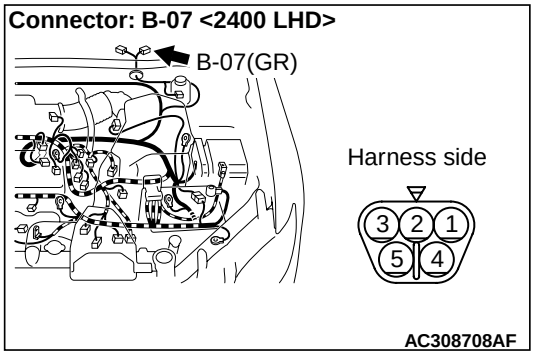

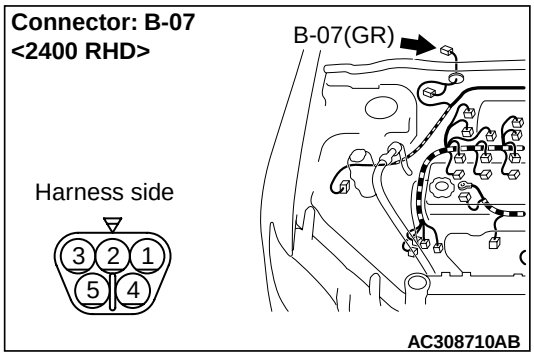

(1) Disconnect the connector, and measure at the wiring harness side.
(2) Ignition switch: ON
(3) Windshield wiper switch: LO

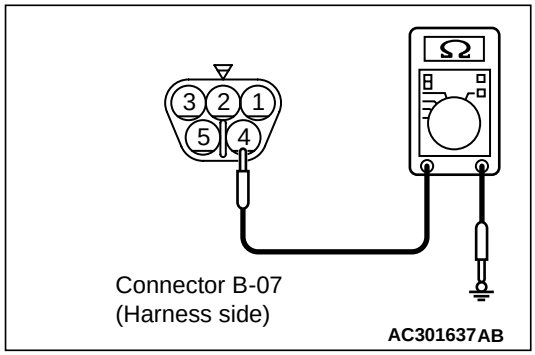

(4) Check the voltage between the B-07 windshield wiper motor connector terminal No.4 <L.H. drive vehicles> or No.3 <R.H. drive vehicles> and body earth.

OK: System voltage

Q: Is the check result normal?
YES : Go to Step 5.
NO : Go to Step 6.

Step 5. Retest the system.

Check that the windshield wipers work normally by moving the switch to each position.

Q: Is the check result normal?
YES : The trouble can be an intermittent malfunction (Refer to GROUP 00 – How to Cope with Intermittent Malfunction P.00-6).
NO : Replace the windshield wiper motor.

Step 6. Connector check: A-12X front-ECU connector

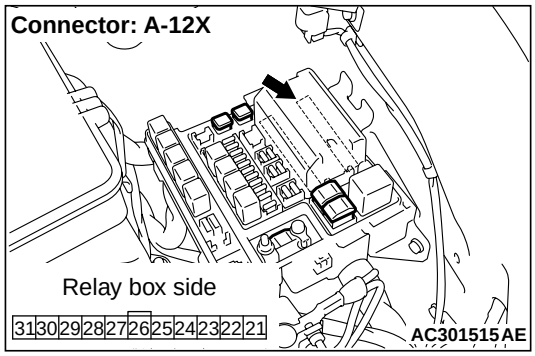

Q: Is the check result normal?
YES : Go to Step 7.
NO : Repair the defective connector.

Step 7. Check the wiring harness between B-07 windshield wiper motor connector terminal No.4 and body earth.

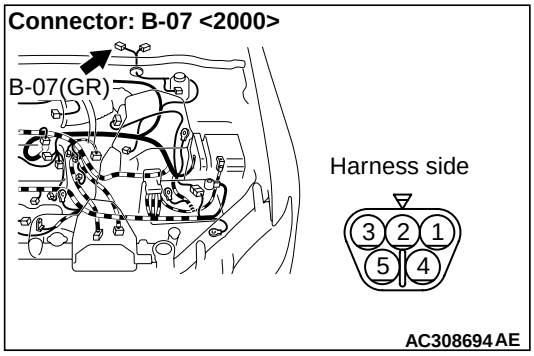

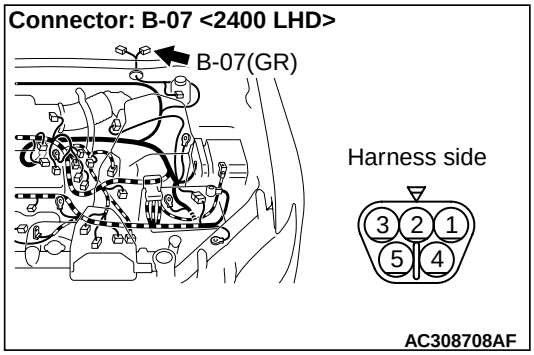

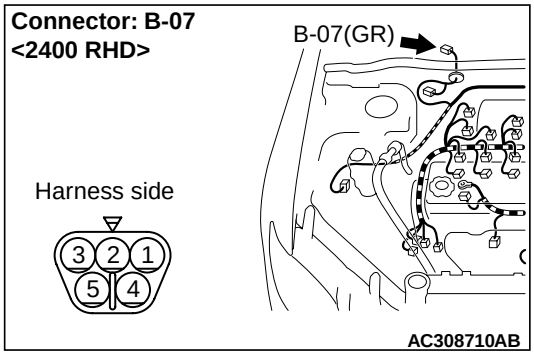

NOTE:

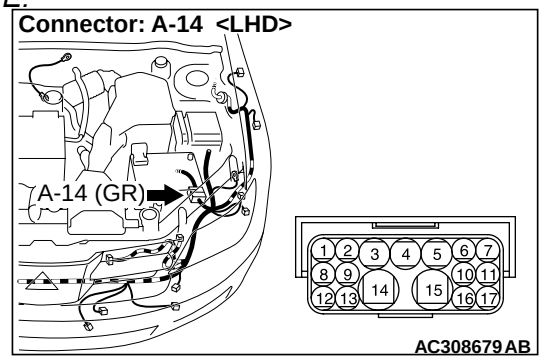

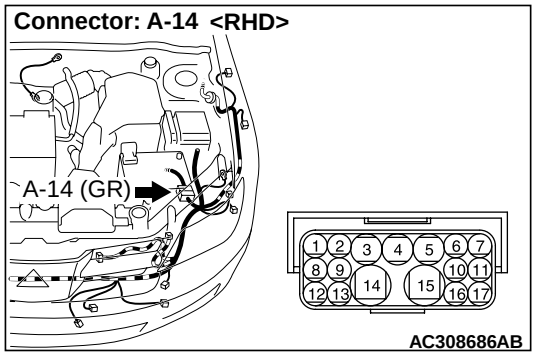

Prior to the wiring harness inspection, check the intermediate connector A-14, and repair if necessary.

- Check the power supply line to front-ECU for open circuit.

Q: Is the check result normal?
YES : Go to Step 8.
NO : Replace the front-ECU.

Step 8. Retest the system.

Check that the windshield wipers work normally by moving the switch to each position.

Q: Is the check result normal?
YES : The trouble can be an intermittent malfunction (Refer to GROUP 00 – How to Cope with Intermittent Malfunction P.00-6).
NO : Replace the windshield wiper motor.

Step 9. Connector check: B-07 windshield wiper motor connector

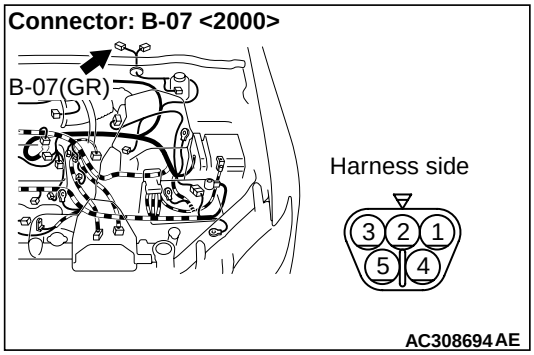

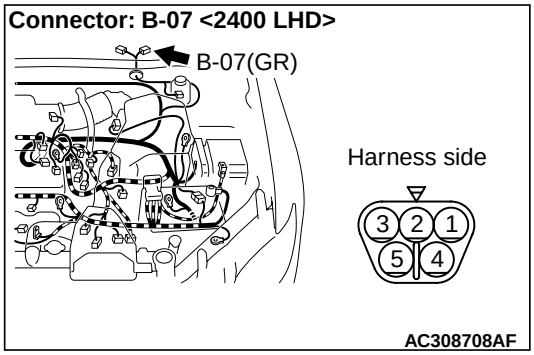

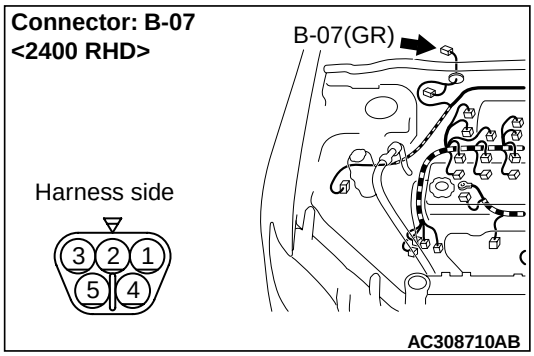

Q: Is the check result normal?
YES : Go to Step 10.
NO : Repair the defective connector.

Step 10. Measure the voltage at the B-07 windshield wiper motor connector.

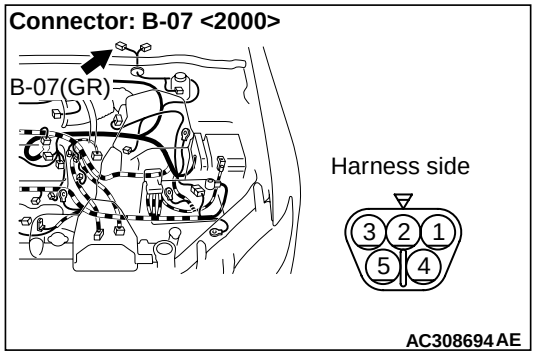

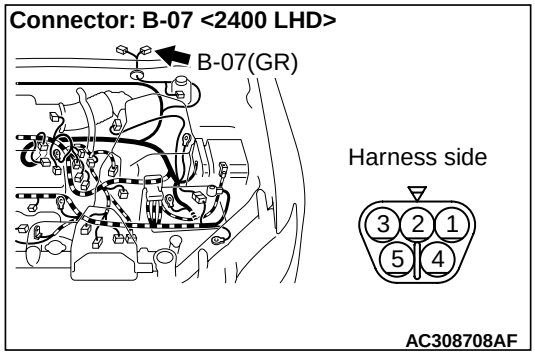

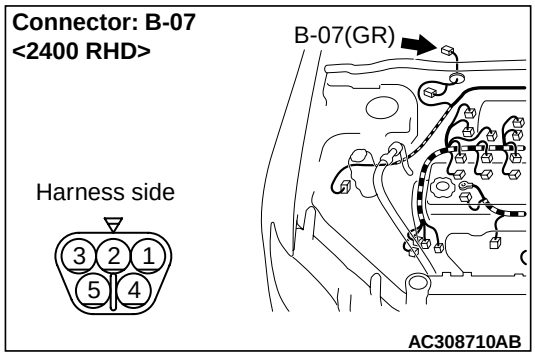

(1) Disconnect the connector, and measure at the wiring harness side.
(2) Ignition switch: ON
(3) Windshield wiper switch: HI

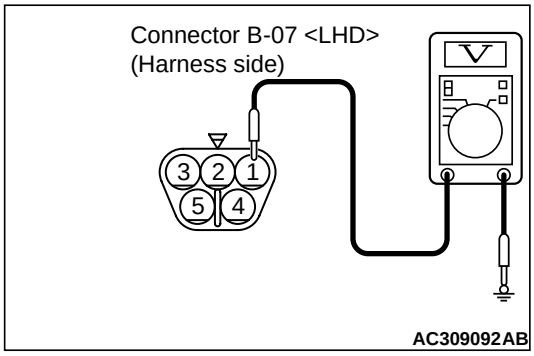

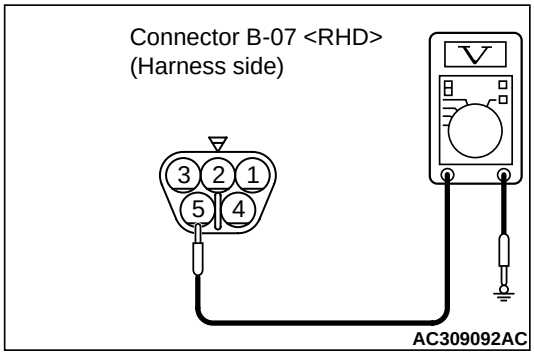

(4) Check the voltage between the B-07 windshield wiper motor connector terminal No.1 <L.H. drive vehicles> or No.5 <R.H. drive vehicles> and body earth.

OK: System voltage

Q: Is the check result normal?
YES : Go to Step 11.
NO : Go to Step 12.

Step 11. Retest the system.
Check that the windshield wipers work normally by moving the switch to each position.

Q: Is the check result normal?
YES : The trouble can be an intermittent malfunction (Refer to GROUP 00 – How to Cope with Intermittent Malfunction P.00-6).
NO : Replace the windshield wiper motor.

Step 12. Connector check: A-12X front-ECU connector

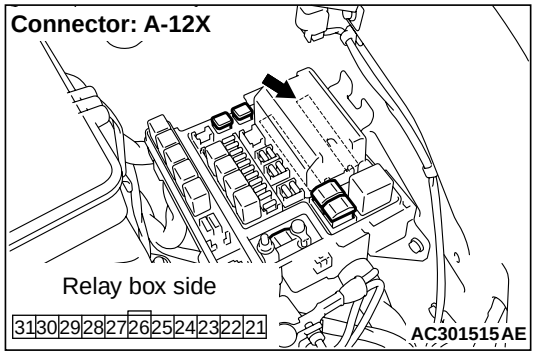

Q: Is the check result normal?
YES : Go to Step 13.
NO : Repair the defective connector.

Step 13. Check the wiring harness between B-07 windshield wiper motor connector terminal No.4 and body earth.

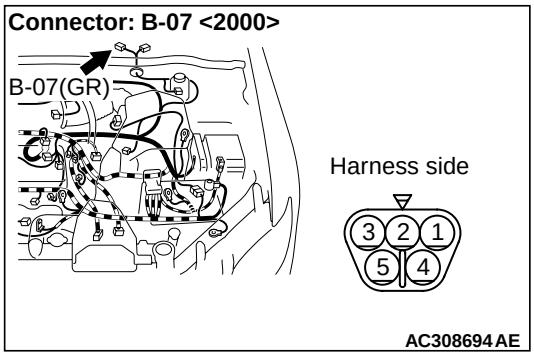

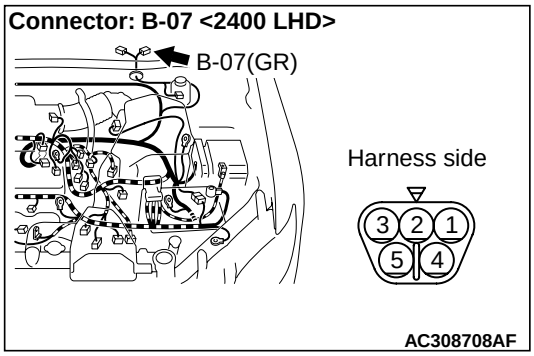

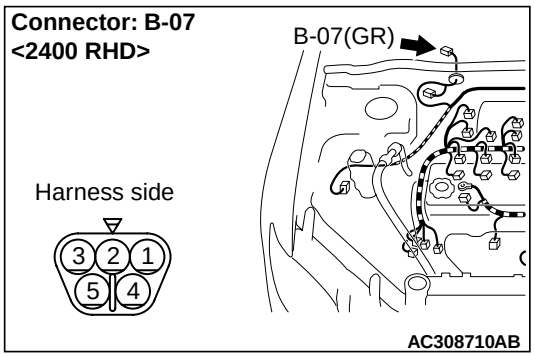

NOTE:

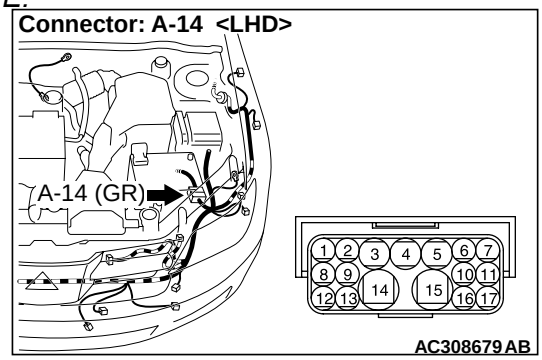

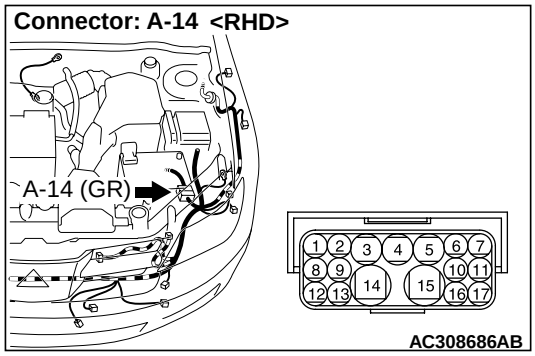

Prior to the wiring harness inspection, check the intermediate connector A-14, and repair if necessary.

- Check the power supply line to front-ECU for open circuit.

Q: Is the check result normal?

YES : Go to Step 14.
NO : Replace the front-ECU.

Step 14. Retest the system.
Check that the windshield wipers work normally by moving the switch to each position.

Q: Is the check result normal?
YES : The trouble can be an intermittent malfunction (Refer to GROUP 00 – How to Cope with Intermittent Malfunction P.00-6).
NO : Replace the windshield wiper motor.

INSPECTION PROCEDURE F-5: The intermittent wiper interval can not be adjusted by operating the windshield intermittent wiper volume control.

⚠ CAUTION
Whenever the ECU is replaced, ensure that the input and output signal circuits are normal.

Windshield Wiper Intermittent Volume Input Signal

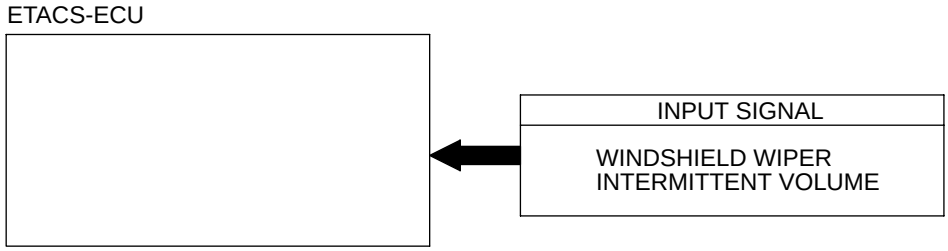

W3Z04E03AA

COMMENTS ON TROUBLE SYMPTOM
The column switch or the front-ECU may be defective.

POSSIBLE CAUSES
- Malfunction of the column switch
- Malfunction of the front-ECU
- Damaged harness wires and connectors

DIAGNOSIS PROCEDURE

Step 1. Pulse check
Check the input signals below which are related to the windshield intermittent wiper function.

System switch	Check condition
Ignition switch (ACC)	When turned from LOCK (OFF) position to the ACC position
Windshield intermittent wiper volume	When the windshield intermittent wiper volume is rotated from "FAST" to "SLOW" (a pulse is sent around the volume middle position)

OK: The MUT-II/III sounds or the voltmeter needle fluctuates.

Q: Is the check result normal?

All the signals are received normally. : Go to Step 2.
The ignition switch (IG1) signal is not received. : Refer to inspection procedure N-1 "The ignition switch (ACC) signal is not received P.54B-298."
The windshield wiper volume signal is not received. : Refer to inspection procedure N-7 "The windshield wiper volume signal is not received P.54B-321."

Step 2. Retest the system.
Check that the windshield intermittent wiper interval can be adjusted by operating the windshield intermittent wiper volume control.

OK: The intermittent wiper interval is changed as the intermittent wiper volume is rotated.

Q: Is the check result normal?
YES : The trouble can be an intermittent malfunction (Refer to GROUP 00 – How to Cope with Intermittent Malfunction P.00-6).
NO : Replace the front-ECU

INSPECTION PROCEDURE F-6: The intermittent wiper interval is not changed according to the vehicle speed.

⚠ CAUTION
Whenever the ECU is replaced, ensure that the input and output signal circuits are normal.

Vehicle Speed Input Signal

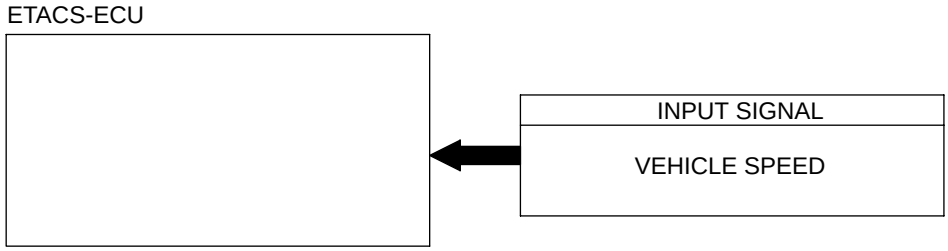

W3Z04E06AA

COMMENTS ON TROUBLE SYMPTOM
The ETACS-ECU calculates the intermittent wiper interval according to the vehicle speed signal which is sent by the engine-ECU.
If the intermittent wiper interval does not depend on the vehicle speed, the input circuit of the vehicle speed signal and the ETACS-ECU may be defective.

POSSIBLE CAUSES
- Malfunction of the vehicle speed signal (engine-ECU)
- Malfunction of the ETACS-ECU
- Damaged harness wires and connectors

DIAGNOSIS PROCEDURE

Step 1. Retest the system.
Check that the windshield intermittent wiper interval can be adjusted by operating the windshield intermittent wiper volume control.

Q: Is the check result normal?
YES : Go to Step 2.
NO : Refer to Inspection Procedure F-5 "The intermittent wiper interval can not be adjusted by operating the windshield intermittent wiper volume control P.54B-178."

Step 2. Pulse check
Check the input signals below which are related to the vehicle speed-dependent intermittent wiper.

System switch	Check condition
Ignition switch (ACC)	When turned from LOCK (OFF) position to the ACC position
Vehicle speed signal (engine-ECU)	When the vehicle speed has reached 10 km/h or more

OK: The MUT-II/III sounds or the voltmeter needle fluctuates.

Q: Is the check result normal?
All the signals are received normally. : Go to Step 3.
The ignition switch (IG1) signal is not received. : Refer to inspection procedure N-1 "The ignition switch (ACC) signal is not received P.54B-298."
The vehicle speed signal (engine-ECU) is not received. : Refer to inspection procedure N-13 "The vehicle speed signal is not received <M/T>P.54B-358 or <A/T>P.54B-363 ."

Step 3. Check the SWS monitor customized function.
Use the SWS monitor customize function to confirm that "SPEED SEN WIP" is set to "W.FUNCTION".

⚠ CAUTION
The SWS monitor must be used in order to confirm and change that setting. Use the SWS monitor to confirm and/or change the customized function.

Q: Is the check result normal?

YES : Go to Step 4.
NO : Use the SWS monitor customize function to set the "SPEED SEN WIP" to "W.FUNCTION" (Refer to GROUP 54B – Customize adjustment P.54B-393).

Step 4. Retest the system.
Check that the intermittent wiper interval depends on the vehicle speed.

Q: Is the check result normal?
YES : The trouble can be an intermittent malfunction (Refer to GROUP 00 – How to Cope with Intermittent Malfunction P.00-6).
NO : Replace the ETACS-ECU.

INSPECTION PROCEDURE F-7: The windshield washer does not work.

⚠ CAUTION

Whenever the ECU is replaced, ensure that the input and output signal circuits are normal.

Windshield Washer Motor Circuit

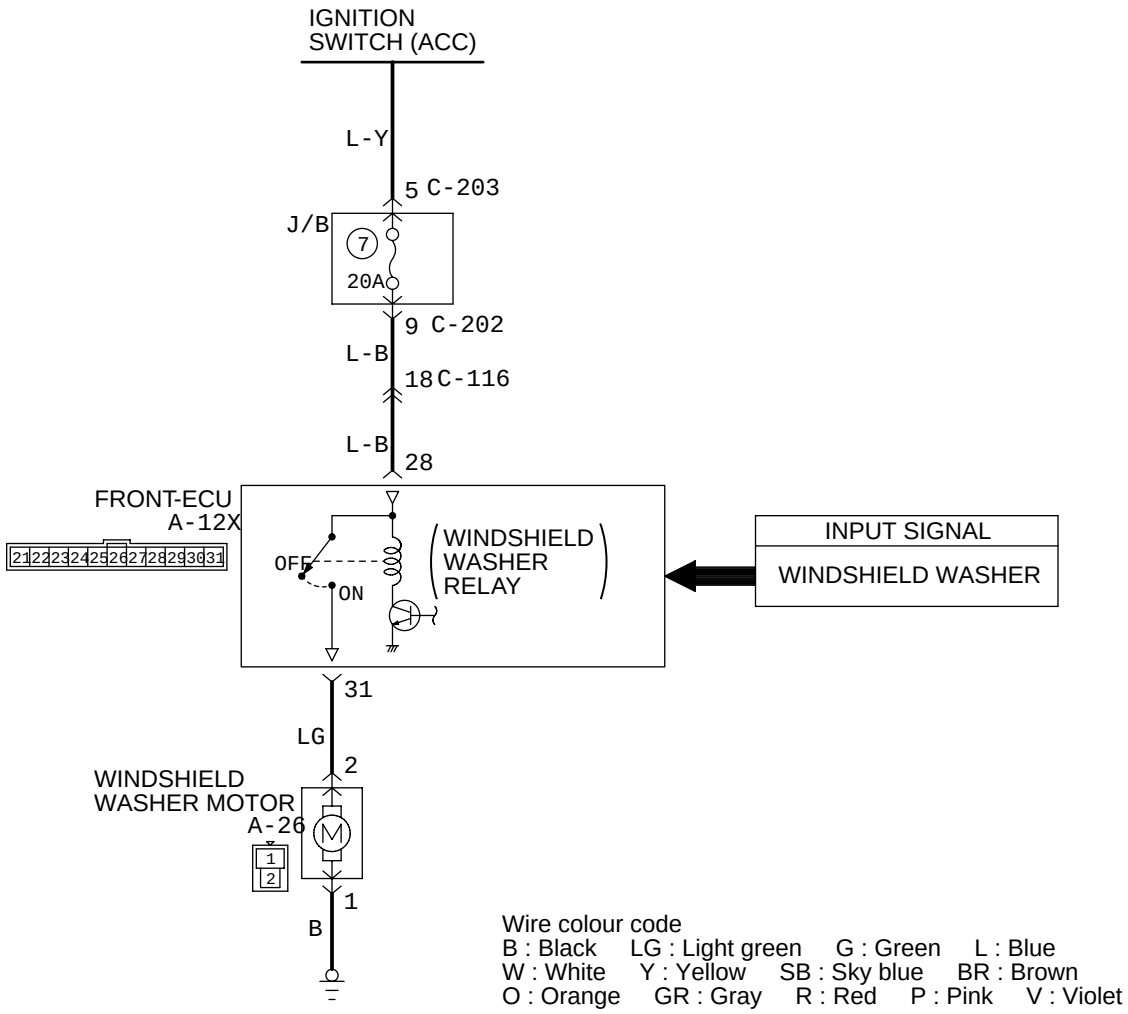

W3Z04E04A

COMMENTS ON TROUBLE SYMPTOM

The windshield washer motor, the column switch or the front-ECU may be defective.

POSSIBLE CAUSES

- Malfunction of the windshield washer motor
- Malfunction of the column switch
- Malfunction of the front-ECU
- Damaged harness wires and connectors

DIAGNOSIS PROCEDURE

Step 1. Check the operation of the windshield wipers.

Check that the windshield wipers work normally.

Q: Is the check result normal?

YES : Go to Step 2.

NO : Refer to Inspection Procedure F-1 "The windshield wipers does not work at all P.54B-153."

Step 2. Pulse check

Check the input signals below which are related to the windshield wiper.

System switch	Check condition
Ignition switch (ACC)	When turned from the LOCK (OFF) position to the ACC position.
Windshield washer switch	When the switch is turned from off to on.

OK: The MUT-II/III sounds or the voltmeter needle fluctuates.

Q: Is the check result normal?

All the signals are received normally : Go to Step 3.

The ignition switch (ACC) signal is not received. : Refer to inspection procedure N-1 "The ignition switch (ACC) signal is not received P.54B-298."

Windshield washer switch signal is not received. : Refer to inspection procedure N-6 "The column switch (windshield wiper washer and rear wiper washer switch) signal is not received P.54B-320."

Step 3. Connector check: A-26 windshield washer motor connector

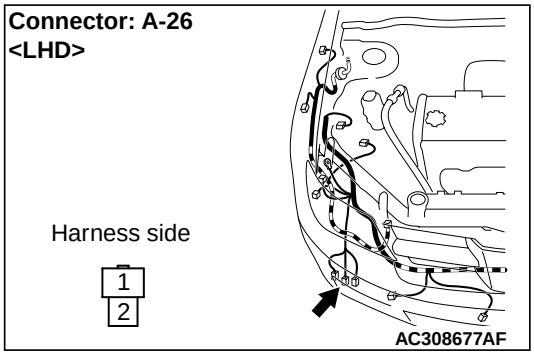

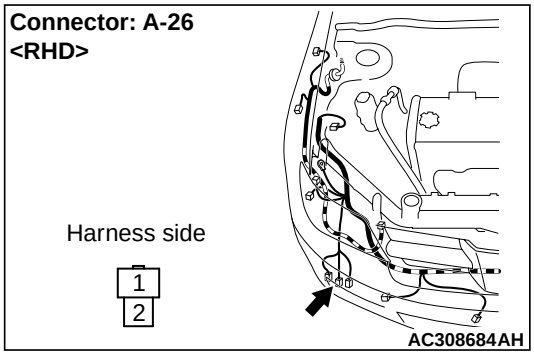

Q: Is the check result normal?

YES : Go to Step 4.

NO : Repair the connector.

Step 4. Check the windshield washer motor assembly.

Refer to GROUP 51 – Windshield washer P.51-26.

Q: Is the check result normal?

YES : Go to Step 5

NO : Replace the windshield washer motor.

Step 5. Measure the resistance at the A-26 windshield washer motor connector.

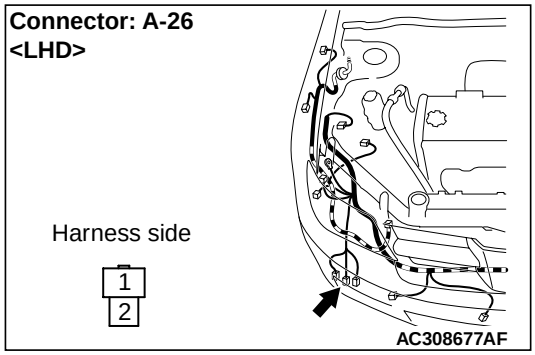

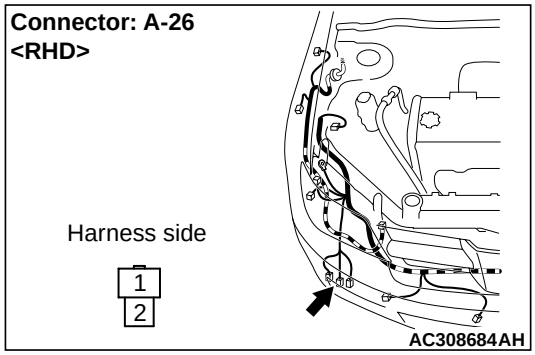

(1) Disconnect the connector, and measure at the wiring harness side.

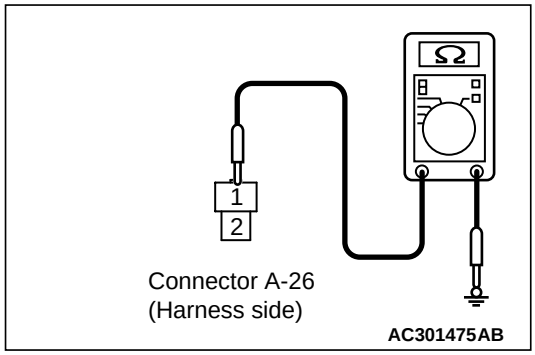

(2) Continuity between A-26 windshield washer motor connector terminal No.1 and body earth

OK: 2Ω or less

Q: Is the check result normal?

YES : Go to Step 7.

NO : Go to Step 6.

Step 6. Check the wiring harness between A-26 windshield washer motor connector terminal No.1 and body earth.

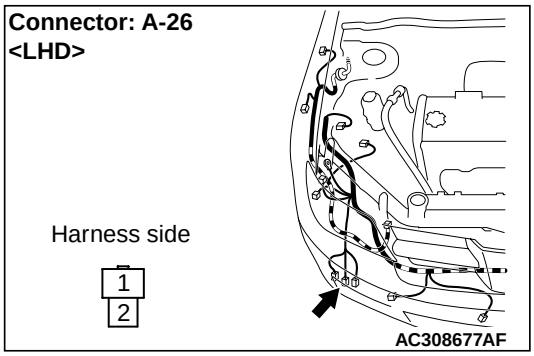

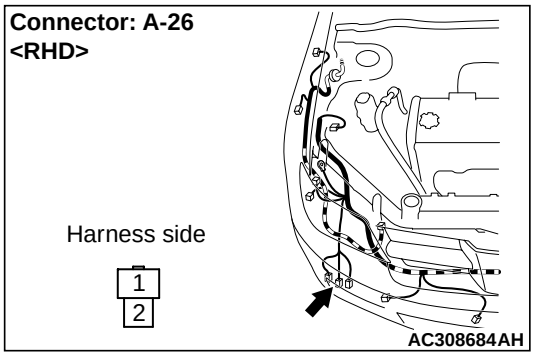

- Check the earth wires for open circuit.

Q: Is the check result normal?

YES : The trouble can be an intermittent malfunction (Refer to GROUP 00 – How to Cope with Intermittent Malfunction P.00-6).

NO : Repair the wiring harness.

Step 7. Connector check: A-12X front-ECU connector

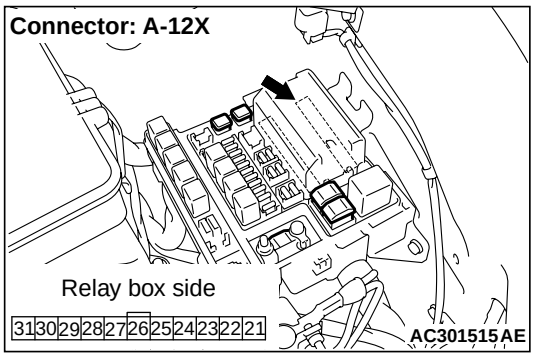

Q: Is the check result normal?

YES : Go to Step 8.

NO : Repair the connector.

Step 8. Check the wiring harness between A-26 windshield washer motor connector terminal No.2 and A-12X front-ECU connector terminal No.31.

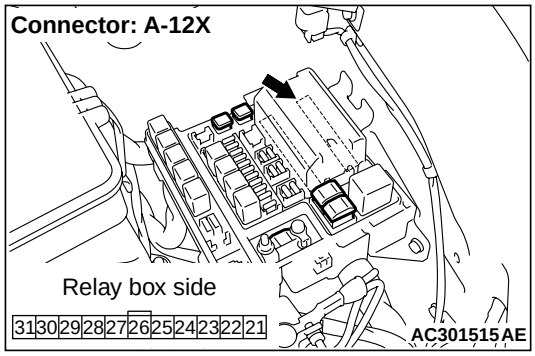

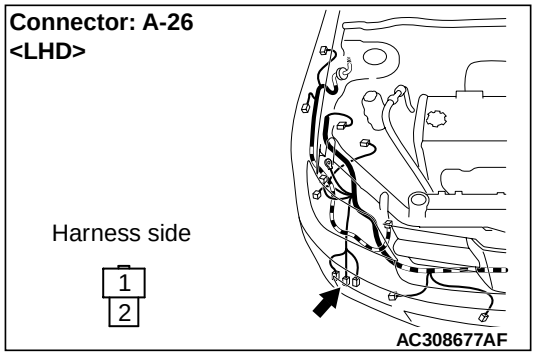

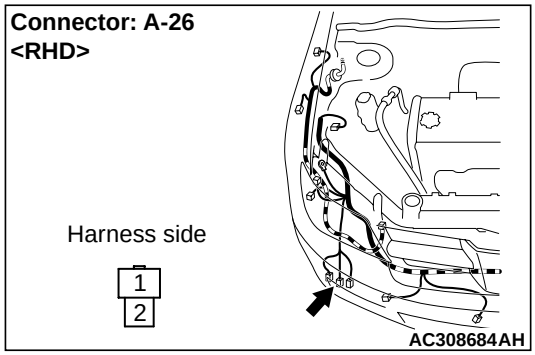

- Check the power supply line to the ignition switch (ACC) for open circuit.

Q: Is the check result normal?
YES : Go to Step 9.
NO : Repair the wiring harness.

Step 9. Retest the system.
The windshield washer should now work normally.

Q: Is the check result normal?
YES : The trouble can be an intermittent malfunction (Refer to GROUP 00 – How to Cope with Intermittent Malfunction P.00-6).
NO : Replace the front-ECU.

REAR WIPER AND WASHER

INSPECTION PROCEDURE G-1: The rear wiper does not work at all.

⚠ CAUTION
Whenever the ECU is replaced, ensure that the input and output signal circuits are normal.

Rear Wiper Drive Circuit <LHD>

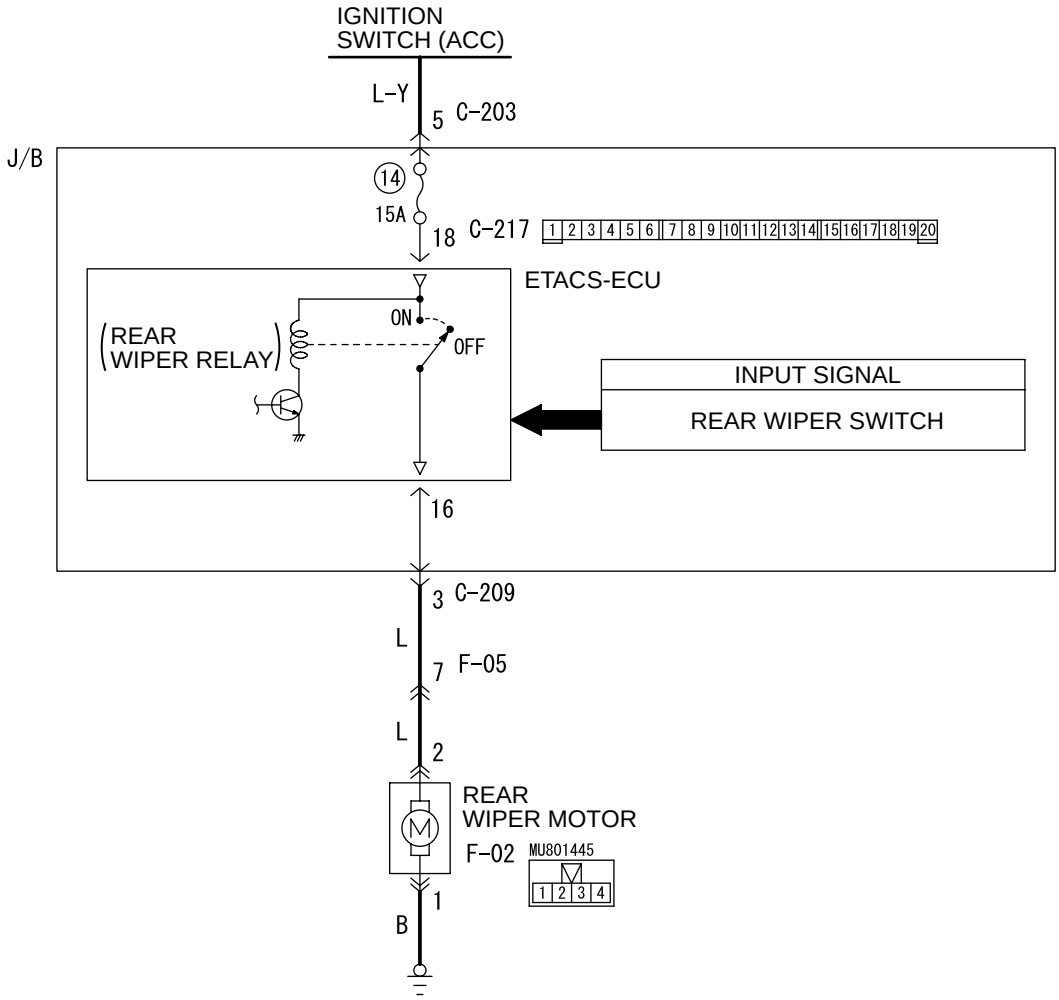

Wire colour code
B : Black LG : Light green G : Green L : Blue W : White Y : Yellow SB : Sky blue
BR : Brown O : Orange GR : Gray R : Red P : Pink V : Violet

W3Z06E03AB

Rear Wiper Drive Circuit <RHD>

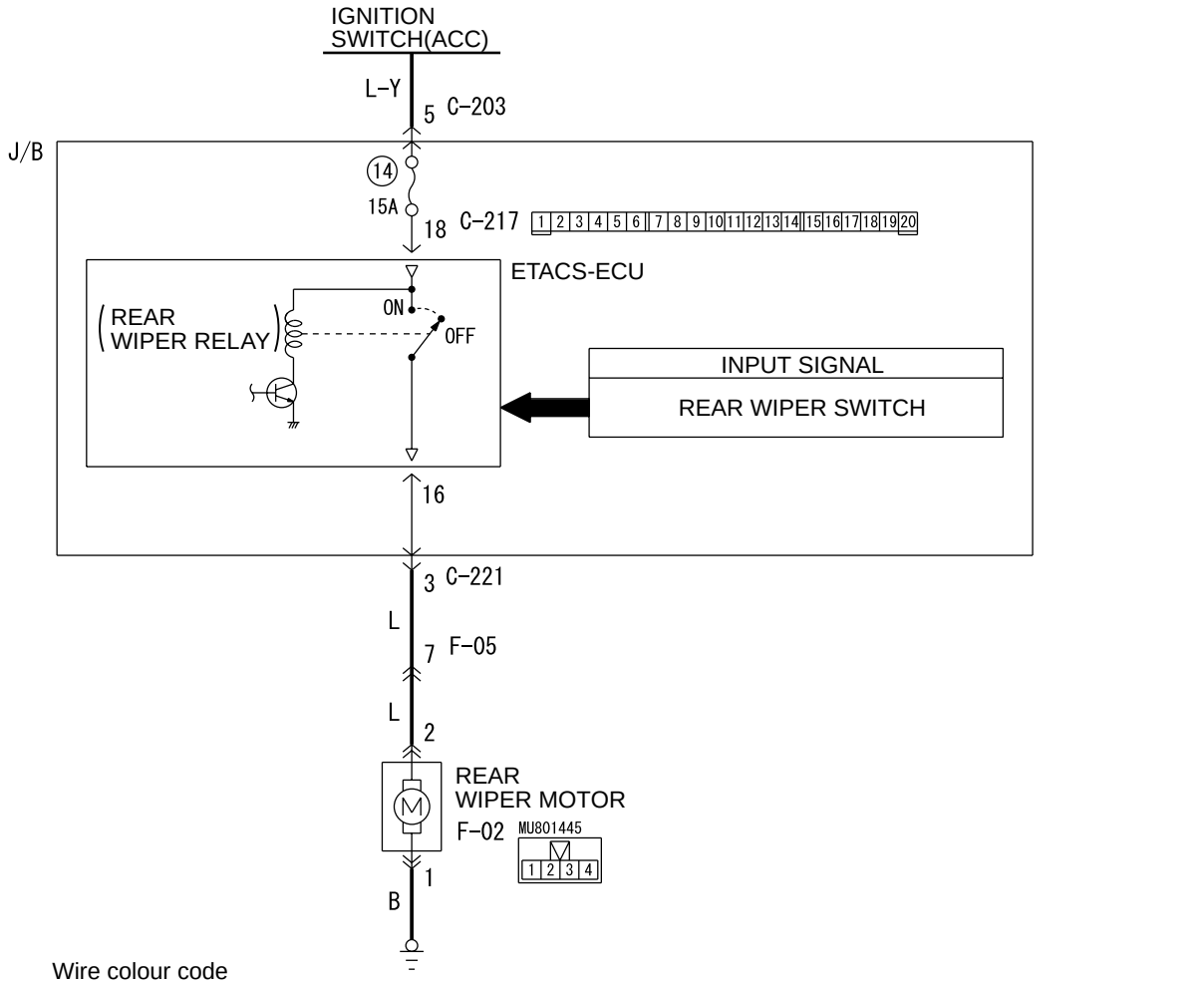

Wire colour code
B : Black LG : Light green G : Green L : Blue W : White Y : Yellow SB : Sky blue
BR : Brown O : Orange GR : Gray R : Red P : Pink V : Violet

W4Z54E20AA

COMMENTS ON TROUBLE SYMPTOM

If the rear wiper does not work normally, the input signal circuits to the components below, the rear wiper motor or the ETACS-ECU may be defective.

- Ignition switch (ACC)
- Rear wiper switch

POSSIBLE CAUSES

- Malfunction of the rear wiper motor
- Malfunction of the column switch
- Malfunction of the ETACS-ECU
- Damaged harness wires and connectors

DIAGNOSTIC PROCEDURE

Step 1. Use the MUT-II/III to confirm a diagnosis code.
Check that the ETACS-ECU sets a diagnosis code.

Q: Is diagnosis code set?
YES : Refer to diagnosis code chart P.54B-17.
NO : Go to Step 2.

Step 2. Pulse check
Check the input signals below which are related to the rear wiper.

System switch	Check condition
Ignition switch (ACC)	When turned from the LOCK (OFF) position to the ACC position
Column switch (rear wiper switch)	When the switch is turned from off to on

OK: The MUT-II/III sounds or the voltmeter needle fluctuates.

Q: Is the check result normal?
All the signals are received normally. : Go to Step 3.
The ignition switch (ACC) signal is not received. : Refer to inspection procedure N-1 "The ignition switch (ACC) signal is not received P.54B-301."
The column switch (rear wiper switch) signal is not received. : Refer to inspection procedure N-6 "The column switch (windshield wiper washer and rear wiper washer switch) signal is not received P.54B-320."

Step 3. Connector check: F-02 rear wiper motor connector

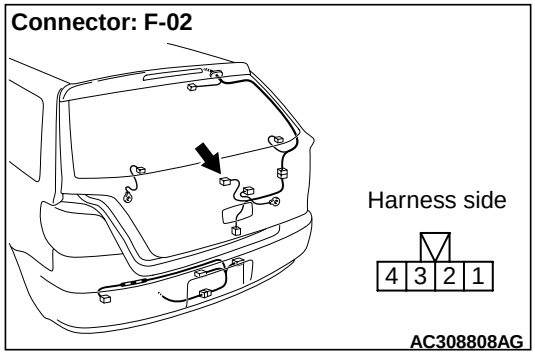

Q: Is the check result normal?
YES : Go to Step 4.
NO : Repair the connector.

Step 4. Check the rear wiper motor.
Refer to GROUP 51 – Rear wiper and washer P.51-31.

Q: Is the check result normal?
YES : Go to Step 5.
NO : Replace the rear wiper motor.

Step 5. Measure the resistance at the F-02 rear wiper motor connector.

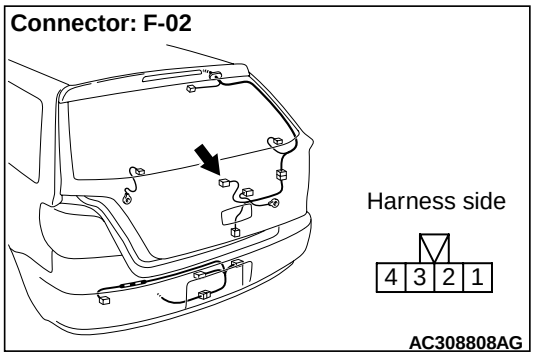

(1) Disconnect the connector, and measure at the wiring harness side.

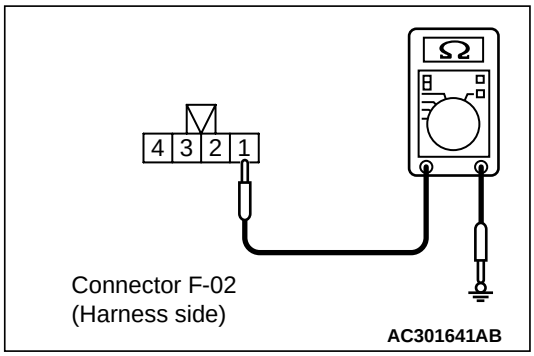

(2) Resistance between F-02 rear wiper motor connector terminal No.1 and body earth

OK: 2 Ω or less

Q: Is the check result normal?
YES : Go to Step 7.
NO : Go to Step 6.

Step 6. Check the wiring harness between F-02 rear wiper motor connector terminal No.1 and body earth.

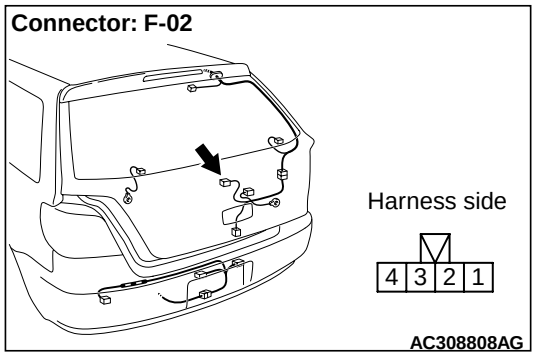

- Check the earth line for open or short circuit.

Q: Is the check result normal?
YES : The trouble can be an intermittent malfunction (Refer to GROUP 00 – How to Cope with Intermittent Malfunction P.00-6).
NO : Repair the wiring harness.

Step 7. Connector check: C-217 ETACS-ECU connector

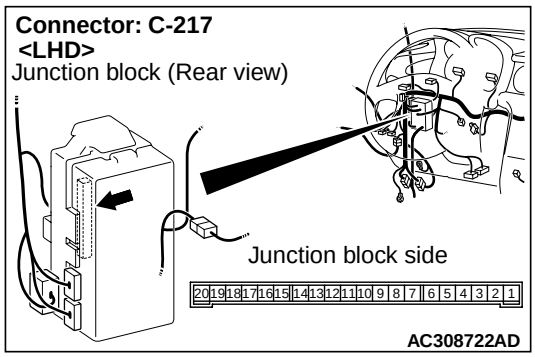

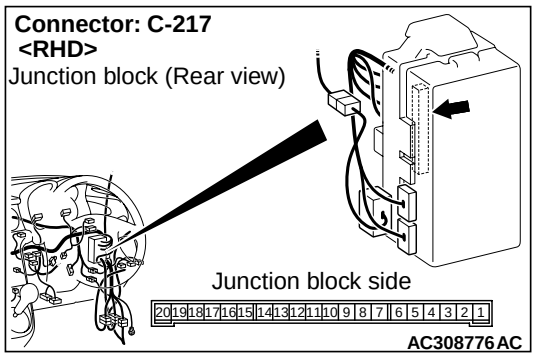

Q: Is the check result normal?
YES : Go to Step 8.
NO : Repair the connector.

Step 8. Check the wiring harness between C-217 ETACS-ECU connector terminal No.16 and F-02 rear wiper motor connector terminal No.2.

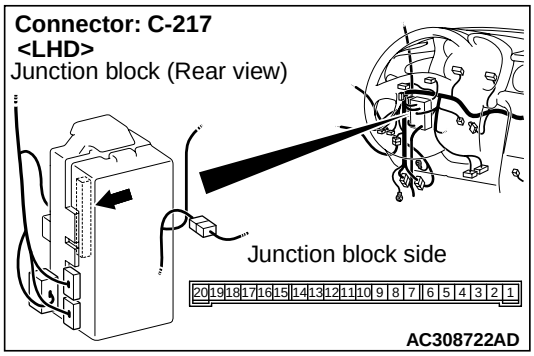

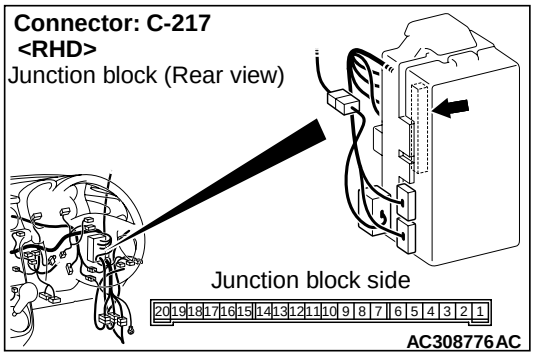

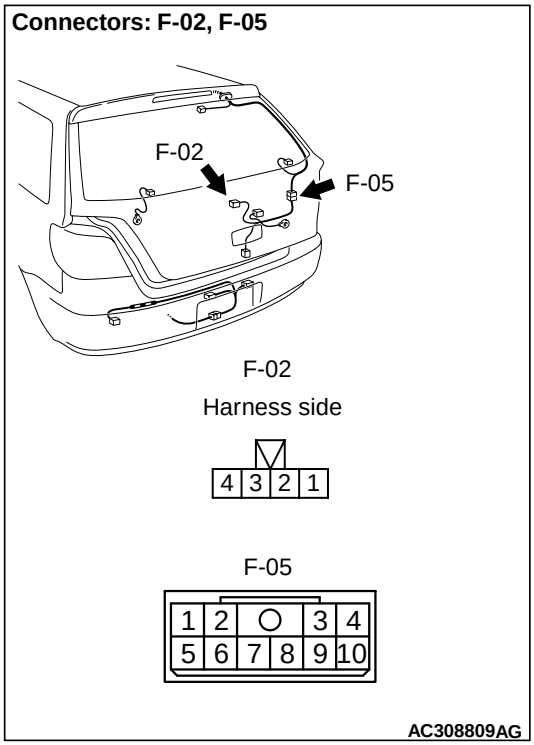

NOTE:

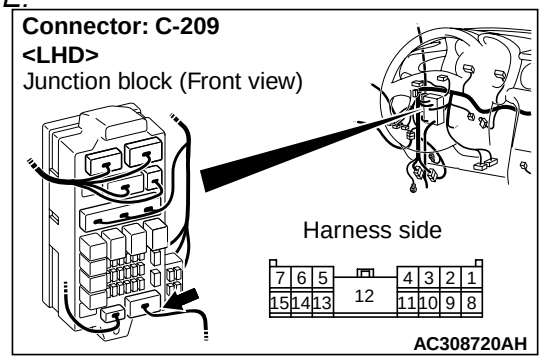

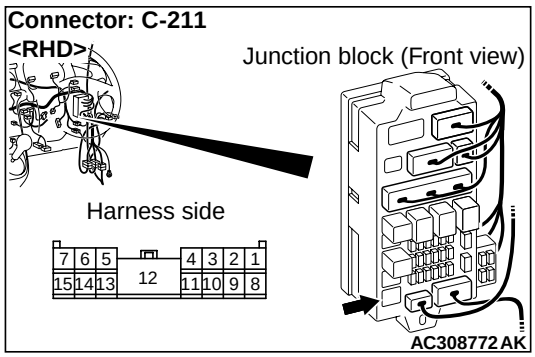

Prior to the wiring harness inspection, check intermediate connector F-05 and junction block connectors C-209 <L.H. drive vehicles> and C-211 <R.H. drive vehicles>, and repair if necessary.

- Check the output line.

Q: 1Is the check result normal?

YES : Go to Step 9.
NO : Repair the wiring harness.

Step 9. Retest the system.
Check that the rear wiper works normally.

Q: Is the check result normal?
YES : The trouble can be an intermittent malfunction (Refer to GROUP 00 – How to Cope with Intermittent Malfunction P.00-6).
NO : Replace the ETACS-ECU.

INSPECTION PROCEDURE G-2: The rear wiper does not stop at the specified park position.

⚠ CAUTION

Whenever the ECU is replaced, ensure that the input and output signal circuits are normal.

Rear Wiper Auto-stop Signal Input <LHD>

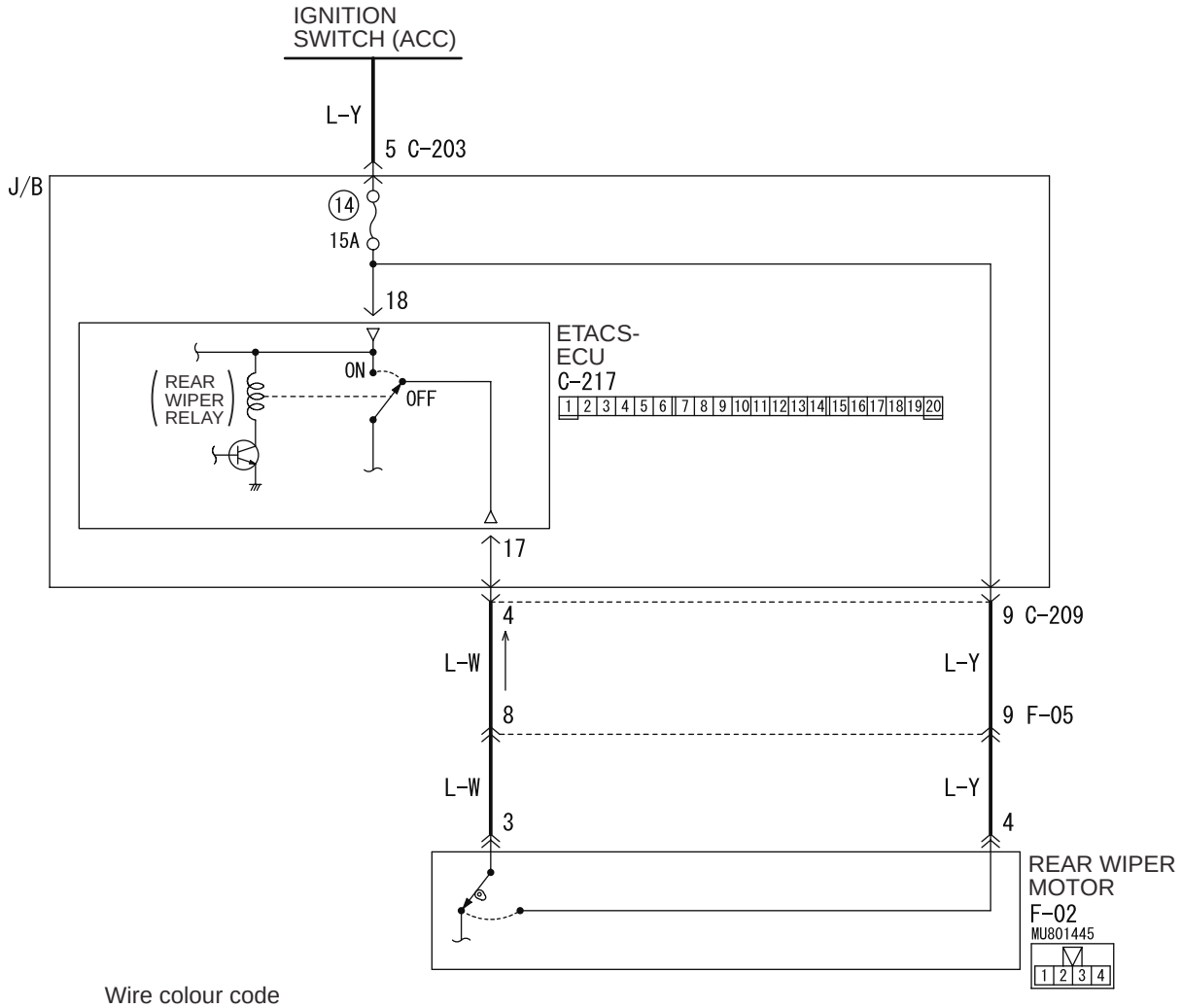

Wire colour code
B : Black LG : Light green G : Green L : Blue W : White Y : Yellow SB : Sky blue
BR : Brown O : Orange GR : Gray R : Red P : Pink V : Violet

W3Z06E04AB

Rear Wiper Auto-stop Signal Input <RHD>

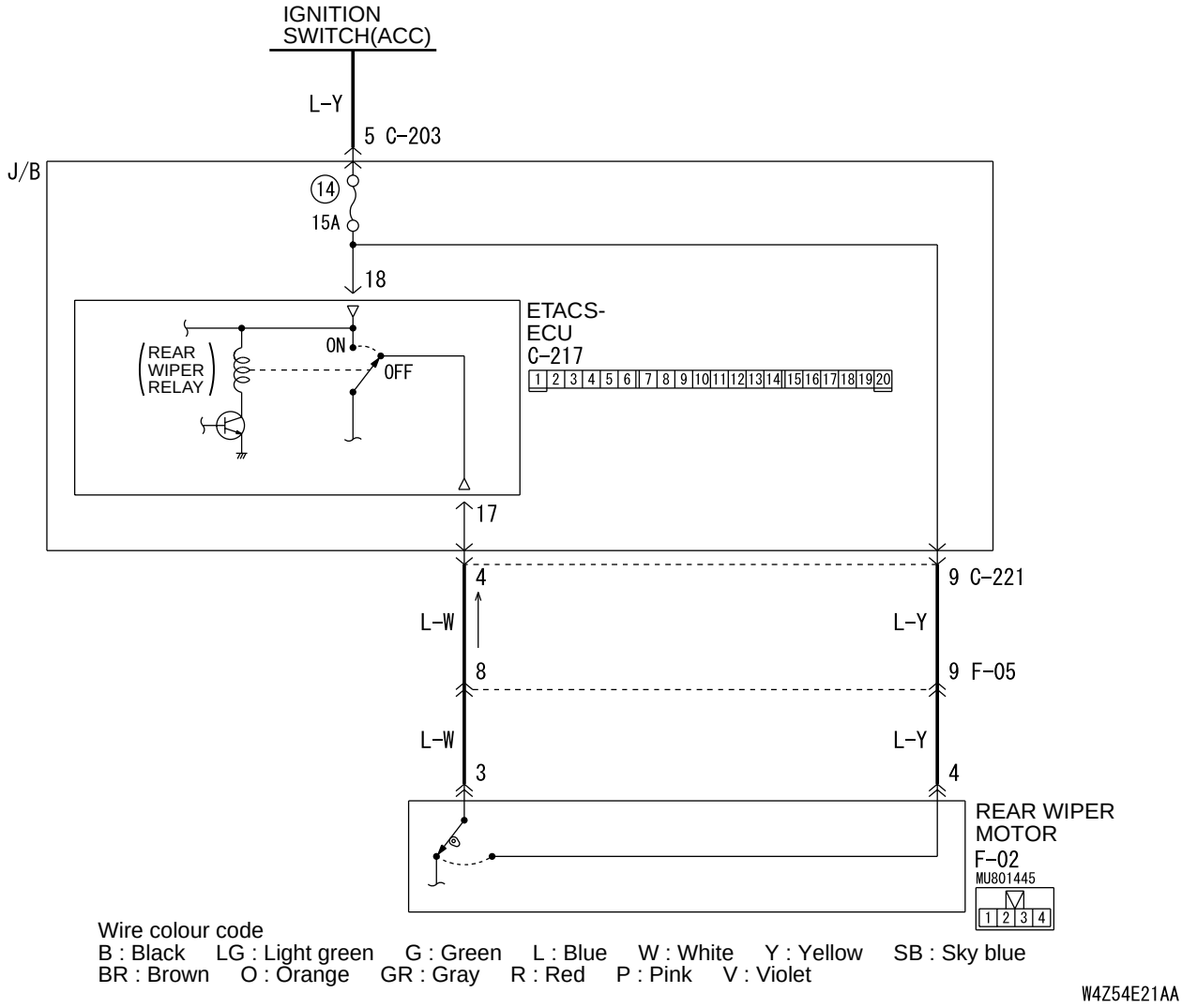

COMMENTS ON TROUBLE SYMPTOM

If the rear wiper does not stop normally within the predetermined range, the rear wiper motor or the ETACS-ECU may be defective.

POSSIBLE CAUSES

- Malfunction of the rear wiper motor
- Malfunction of the ETACS-ECU
- Damaged harness wires and connectors

Step 1. Connector check: F-02 rear wiper motor connector

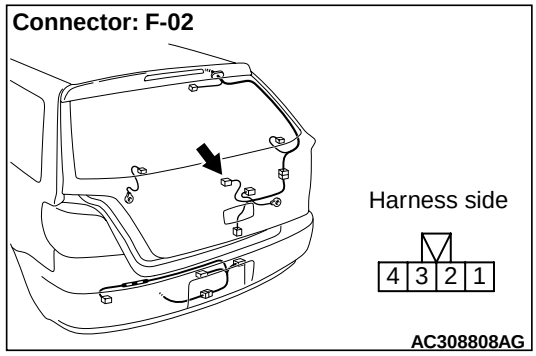

Q: Is the check result normal?

YES : Go to Step 2.

NO : Repair the connector.

Step 2. Check the rear wiper motor.

Refer to GROUP 51 – Rear wiper and washer P.51-31.

Q: Is the check result normal?
YES : Go to Step 3.
NO : Replace the rear wiper motor.

Step 3. Measure the voltage at the F-02 rear wiper motor connector.

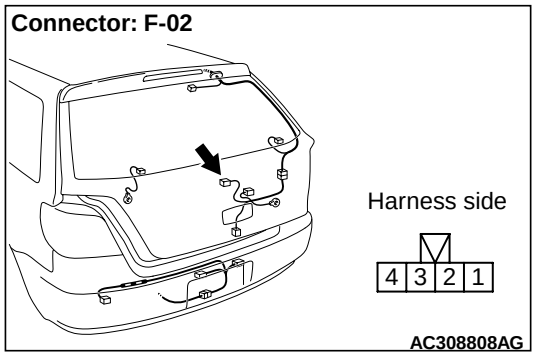

(1) Disconnect the connector, and measure at the wiring harness side.

(2) Ignition switch: ACC

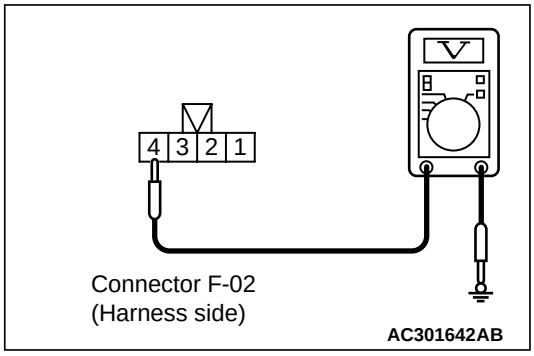

(3) Check the voltage between F-02 rear wiper motor connector terminal No.4 and body earth

OK: System voltage

Q: Is the check result normal?
YES : Go to Step 5.
NO : Go to Step 4.

Step 4. Check the wiring harness between ignition switch (ACC) and F-02 rear wiper motor connector terminal No.4.

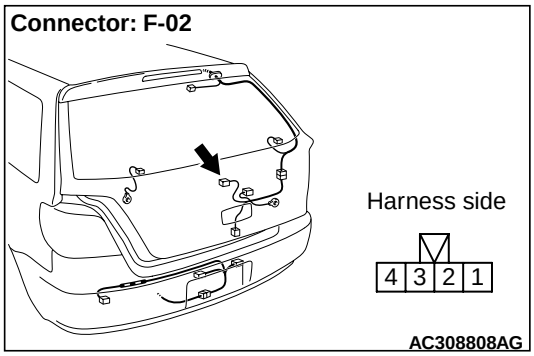

NOTE:

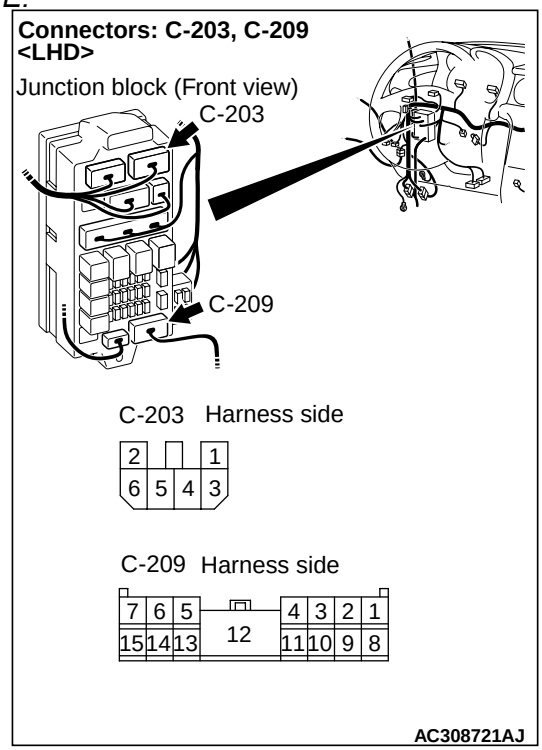

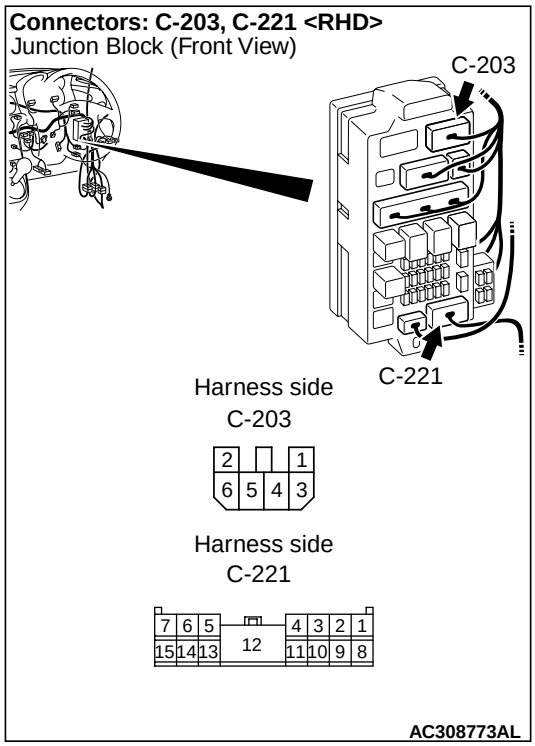

Prior to the wiring harness inspection, check intermediate connector F-05 and junction block connectors C-203, C-209 <L.H. drive vehicles> and C-221 <R.H. drive vehicles>, and repair if necessary.

- Check the power supply line for open or short circuit.

Q: Is the check result normal?

YES : The trouble can be an intermittent malfunction (Refer to GROUP 00 – How to Cope with Intermittent Malfunction P.00-6).

NO : Repair the wiring harness.

Step 5. Connector check: C-217 ETACS-ECU connector

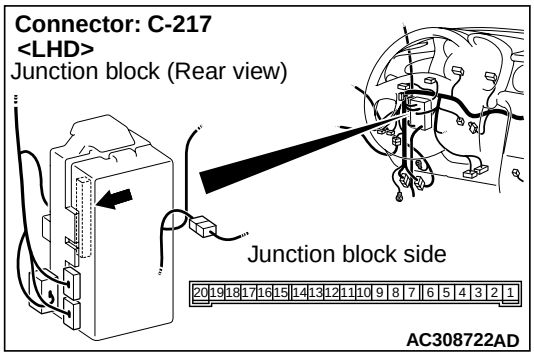

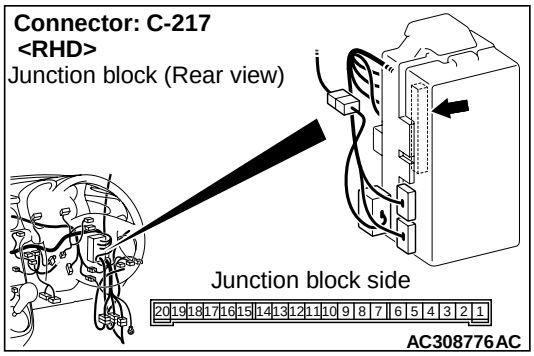

Q: Is the check result normal?

YES : Go to Step 6.

NO : Repair the connector.

Step 6. Check the wiring harness between C-217 ETACS-ECU connector terminal No.17 and F-02 rear wiper motor connector terminal No.3.

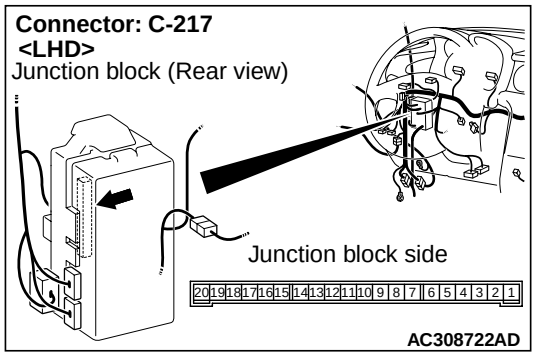

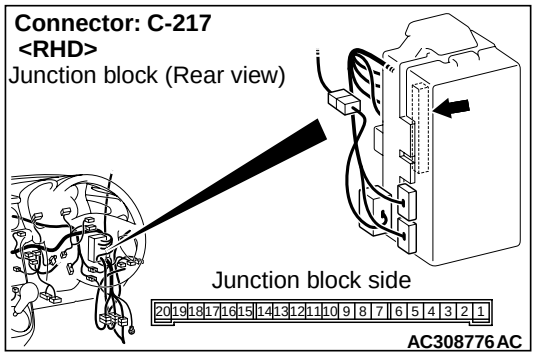

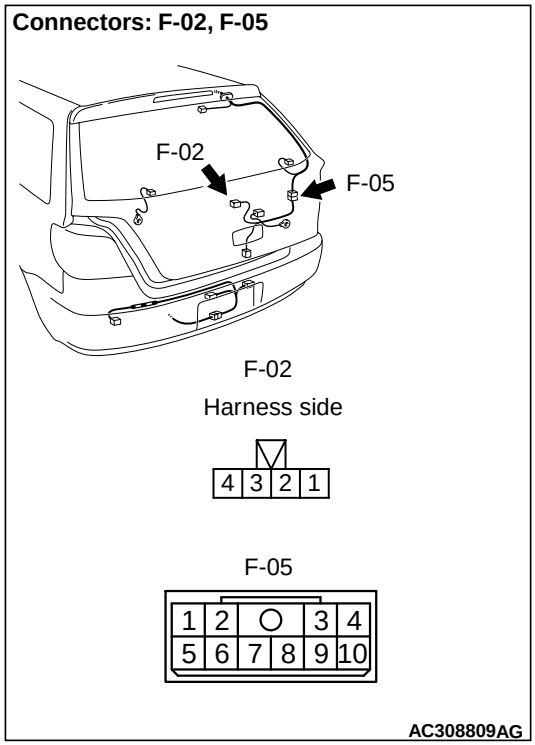

NOTE:

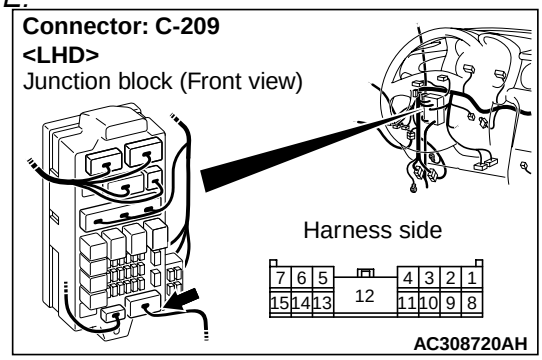

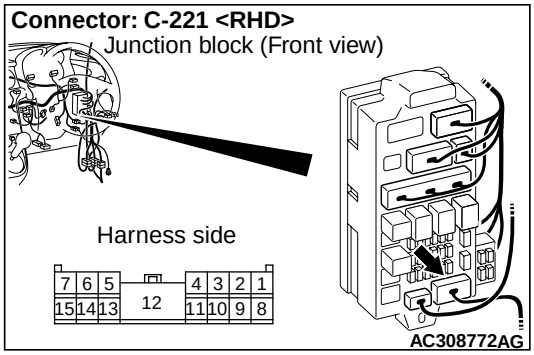

Prior to the wiring harness inspection, check intermediate connector F-05, junction block connectors C-209 <L.H. drive vehicles> and C-221 <R.H. drive vehicles>, and repair if necessary.

- Check the power supply line for open or short circuit.

Q: Is the check result normal?
YES : Go to Step 7.
NO : Repair the wiring harness.

Step 7. Retest the system.
Check that the rear wiper auto stop function works normally.

Q: Is the check result normal?
YES : The trouble can be an intermittent malfunction (Refer to GROUP 00 – How to Cope with Intermittent Malfunction P.00-6).
NO : Replace the ETACS-ECU.

INSPECTION PROCEDURE G-3: When the shift lever <M/T> or selector lever <A/T> is moved to "R" position during the rear wiper operation, the rear wiper does not operate at the continuous mode.

⚠ CAUTION
Whenever the ECU is replaced, ensure that the input and output signal circuits are normal.

"R" Position During Rear Wiper Operation Circuit

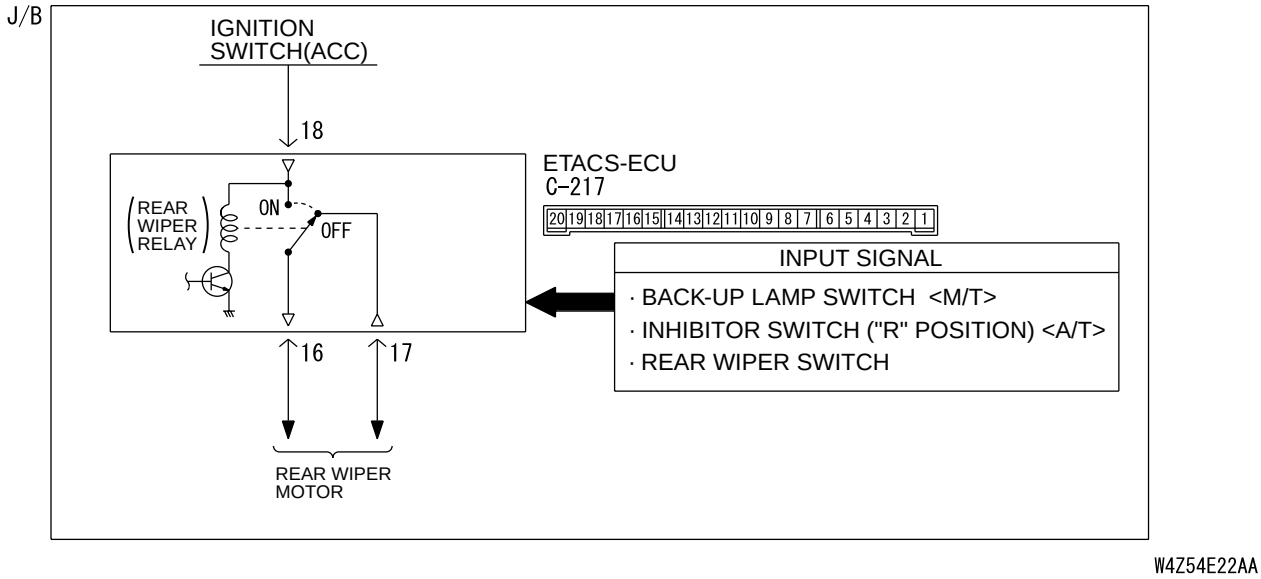

COMMENTS ON TROUBLE SYMPTOM

If the rear wiper does not operate consecutively when the selector lever is moved to the R position during the rear wiper operation, the input signal circuit to the back-up lamp switch ("R" position) <M/T>, inhibitor switch (reverse position) <A/T> or the ETACS-ECU may be defective.

POSSIBLE CAUSES

- Malfunction of the back-up lamp switch <M/T>
- Malfunction of the inhibitor switch <A/T>
- Malfunction of the ETACS-ECU
- Damaged harness wires and connectors

Step 1. Confirm the operation of the rear wiper.
Check that the rear wiper work normally.

Q: Is the check result normal?
YES : Go to Step 2.
NO : Refer to Inspection Procedure G-1 "The rear wiper does not work at all P.54B-185."

Step 2. Pulse check
Check the input signal, which are related to the R (reverse) gear-linked rear wiper operation.

System switch	Check condition
Back-up lamp switch	When the ignition switch is turned ON and the shift lever is moved to the R position.
Inhibitor switch (reverse position)	When the ignition switch is turned ON and the selector lever is moved to the R position.

OK: The MUT-II/III sounds or the voltmeter needle fluctuates.

Q: Is the check result normal?
YES : Go to Step 3.
NO : Refer to inspection procedure N-3 "The back-up lamp switch signal is not received <M/T>P.54B-304." Or refer to inspection procedure N-3 "The inhibitor switch (reverse position) signal is not received <A/T>P.54B-309."

Step 3. Retest the system.
Check that the rear wiper operates consecutively when the shift lever is moved to the R position during the rear wiper operation.

Q: Is the check result normal?

YES : The trouble can be an intermittent malfunction (Refer to GROUP 00 – How to Cope with Intermittent Malfunction P.00-6).
NO : Replace the ETACS-ECU.

INSPECTION PROCEDURE G-4: The rear washer does not work.

⚠ CAUTION
Whenever the ECU is replaced, ensure that the input and output signal circuits are normal.

Rear Washer Drive Circuit

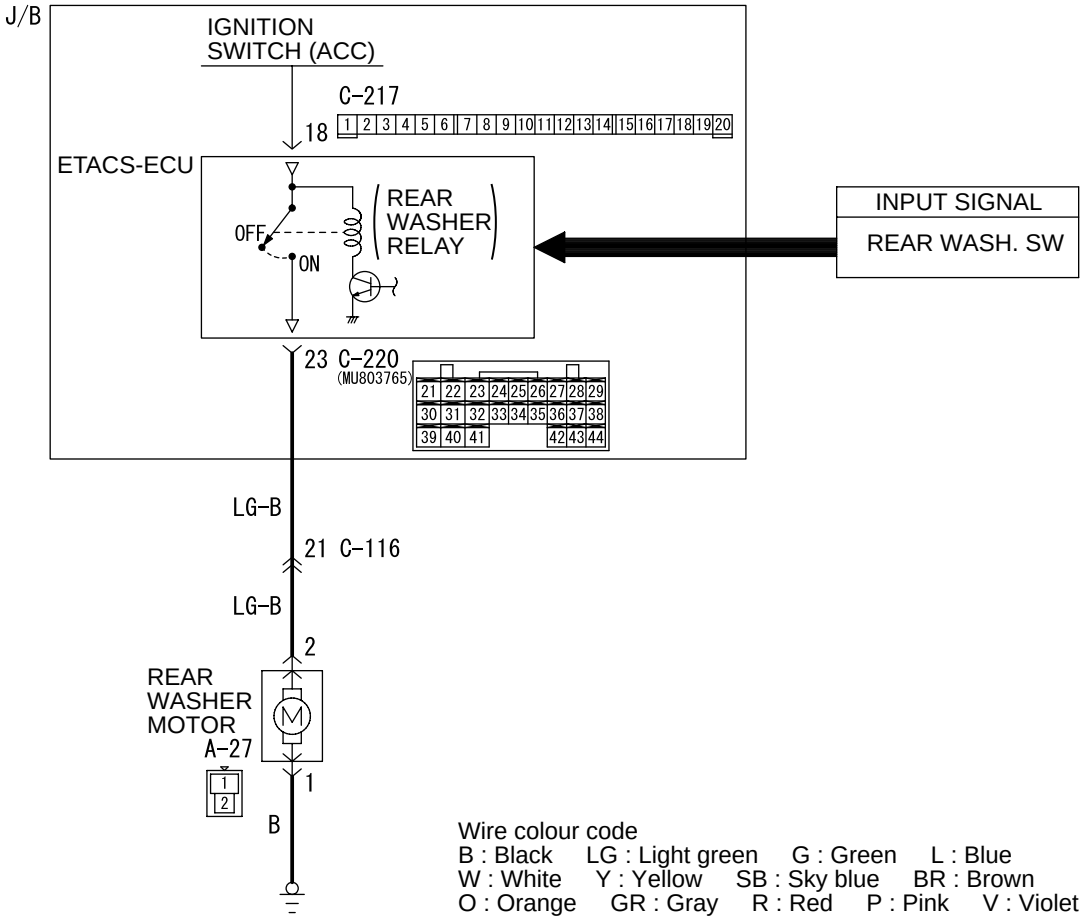

Wire colour code
B : Black LG : Light green G : Green L : Blue
W : White Y : Yellow SB : Sky blue BR : Brown
O : Orange GR : Gray R : Red P : Pink V : Violet

W3Z06E01A

COMMENTS ON TROUBLE SYMPTOM
If the rear washer does not work normally, the input signal circuits to the rear washer switch, rear washer motor or the ETACS-ECU may be defective.

POSSIBLE CAUSES
- Malfunction of the rear washer motor
- Malfunction of the column switch
- Malfunction of the ETACS-ECU
- Damaged harness wires and connectors

Step 1. Confirm the operation of the rear wiper.
Check that the rear wiper work normally.

Q: Is the check result normal?
YES : Go to Step 2.
NO : Refer to Inspection Procedure G-1 "The rear wiper does not work at all P.54B-185."

Step 2. Pulse check
Check the input signals below which are related to the rear washer.
- Ignition switch: ACC

System switch	Check condition
Column switch (rear washer switch)	When the switch is turned from off to on

OK: The MUT-II/III sounds or the voltmeter needle fluctuates.

Q: Is the check result normal?
YES : Go to Step 3.
NO : Refer to inspection procedure N-6 "The column switch (windshield wiper washer and rear wiper washer switch) signal is not received P.54B-320."

Step 3. Connector check: A-27 rear washer motor connector

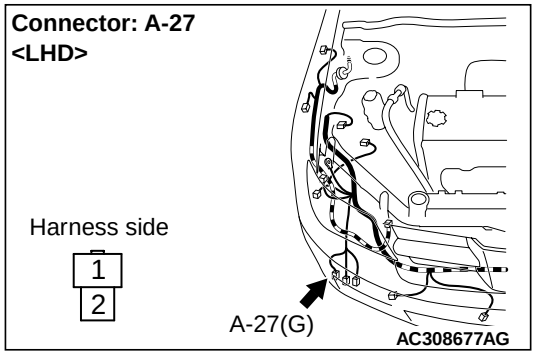

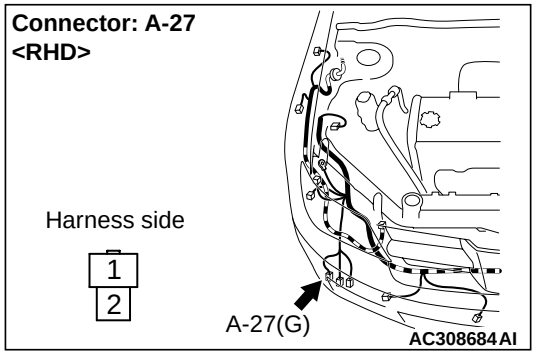

Q: Is the check result normal?
YES : Go to Step 4.
NO : Repair the connector.

Step 4. Check the rear washer motor.
Refer to GROUP 51 – Rear wiper and washer P.51-31.

Q: Is the check result normal?
YES : Go to Step 5.
NO : Replace the rear washer motor.

Step 5. Measure the resistance at the A-27 rear washer motor connector.

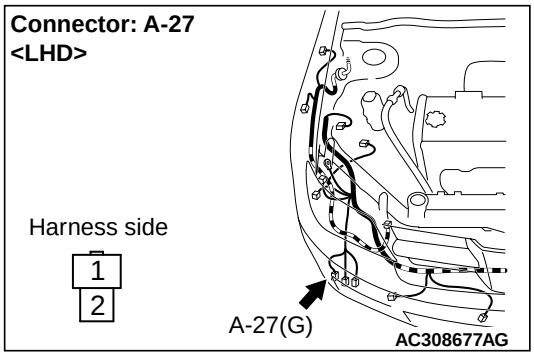

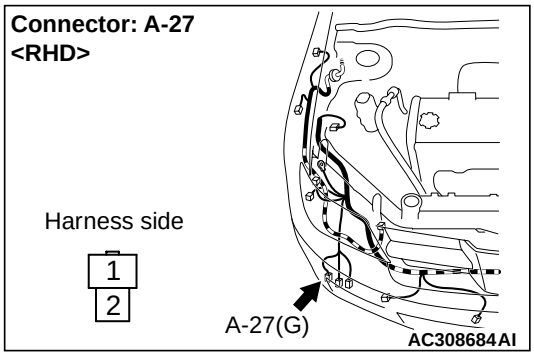

(1) Disconnect the connector, and measure at the wiring harness side.

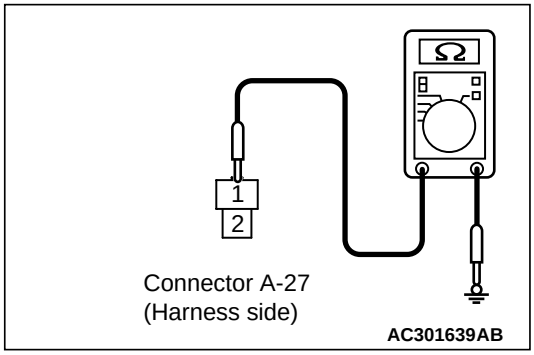

(2) Resistance between A-27 rear washer motor connector terminal No.1 and body earth

OK: 2 Ω or less

Q: Is the check result normal?
YES : Go to Step 7.
NO : Go to Step 6.

Step 6. Check the wiring harness between A-27 rear washer motor connector terminal No.1 and body earth.

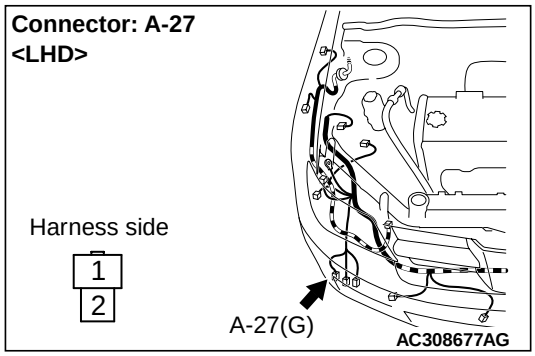

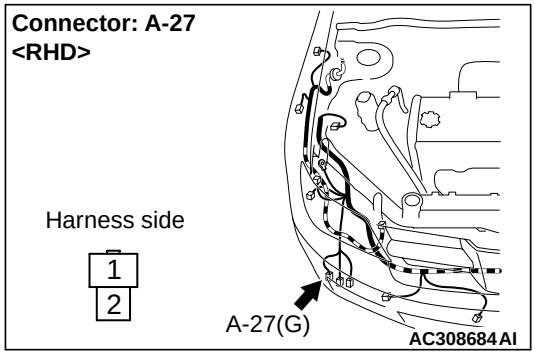

- Check the earth line for open or short circuit.

Q: Is the check result normal?
YES : The trouble can be an intermittent malfunction (Refer to GROUP 00 – How to Cope with Intermittent Malfunction P.00-6).
NO : Repair the wiring harness.

Step 7. Connector check: C-220 ETACS-ECU connector

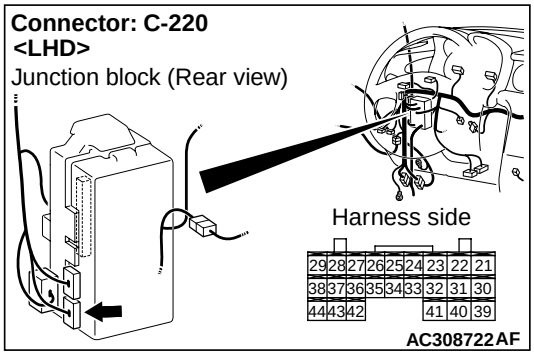

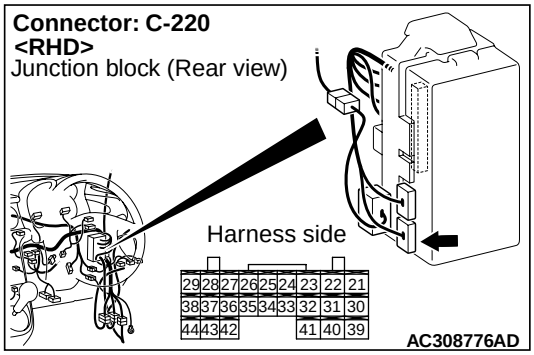

Q: Is the check result normal?
YES : Go to Step 8.
NO : Repair the connector.

Step 8. Check the wiring harness between C-220 ETACS-ECU connector terminal No.23 and A-27 rear washer motor connector terminal No.2.

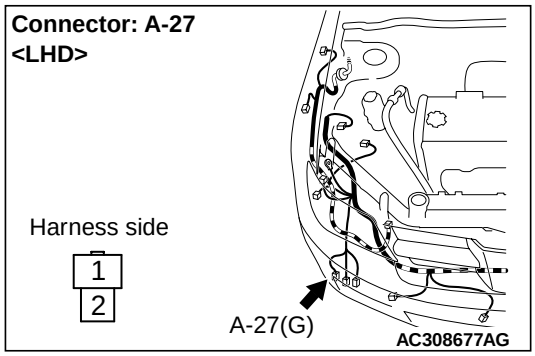

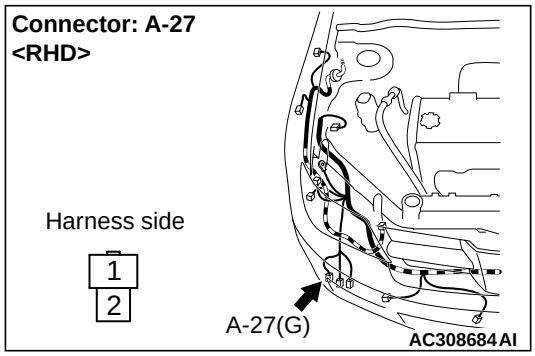

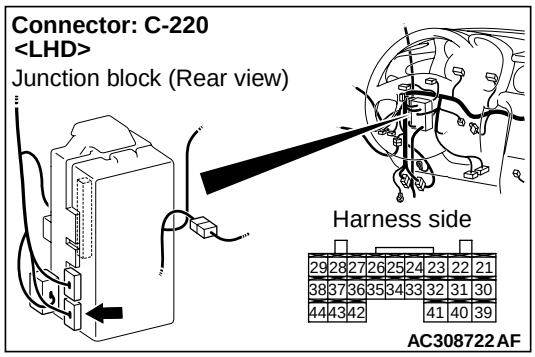

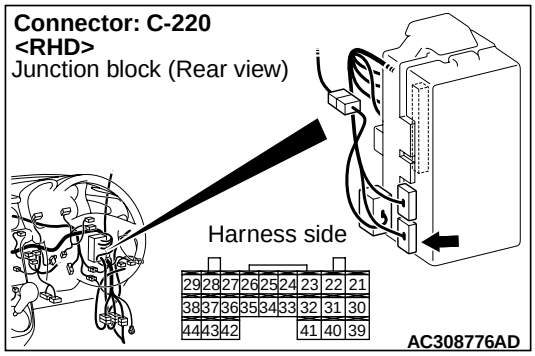

NOTE:

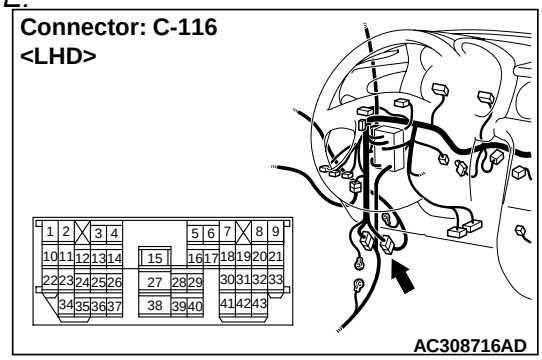

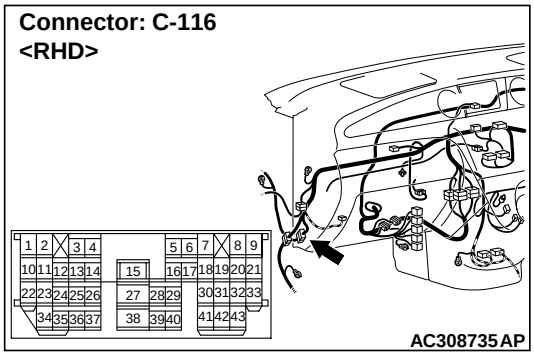

Prior to the wiring harness inspection, check intermediate connector C-116 and repair if necessary.

- Check the output signal line.

Q: Is the check result normal?
YES : Go to Step 9.
NO : Repair the wiring harness.

Step 9. Retest the system.
Check that the rear washer works normally.

Q: Is the check result normal?
YES : The trouble can be an intermittent malfunction (Refer to GROUP 00 – How to Cope with Intermittent Malfunction P.00-6).
NO : Replace the ETACS-ECU.

HEADLAMP WASHER

INSPECTION PROCEDURE H-1: The headlamp washer does not work.

⚠ CAUTION
Whenever the ECU is replaced, ensure that the input and output signal circuits are normal.

Headlamp Washer Motor Circuit

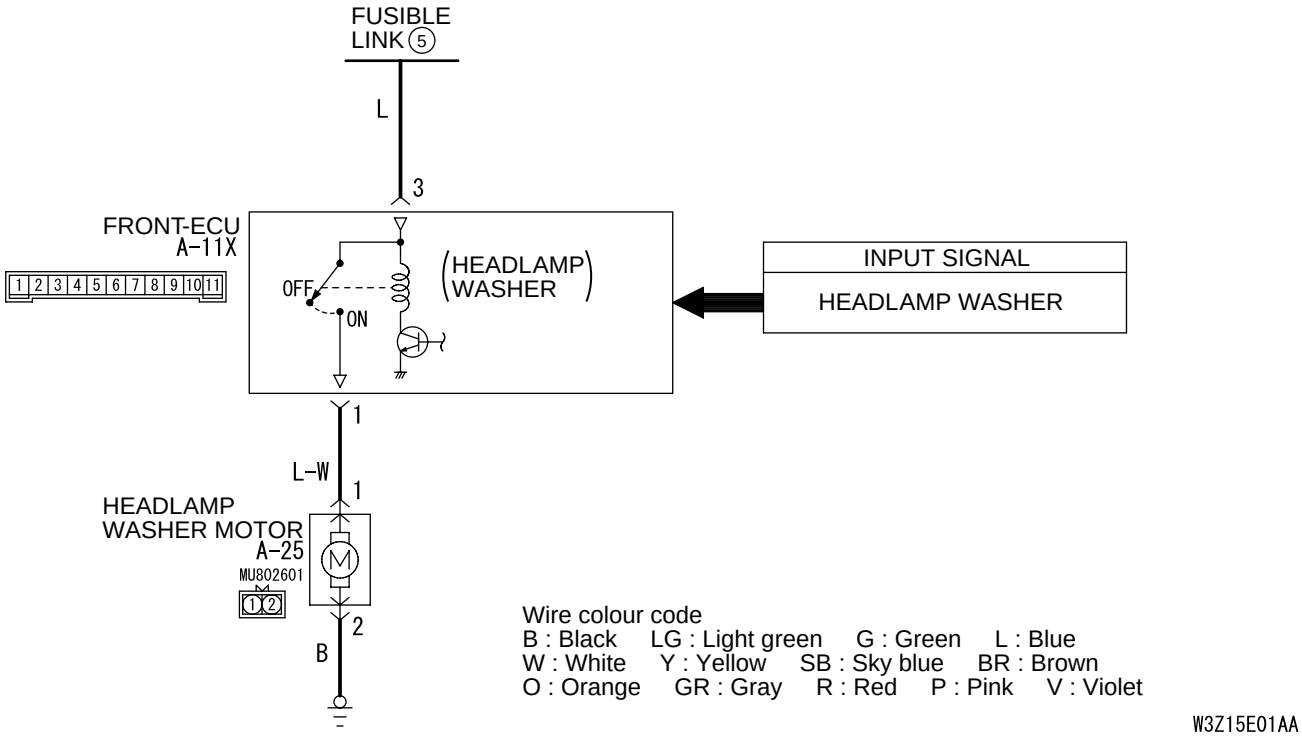

COMMENTS ON TROUBLE SYMPTOM
The headlamp washer motor, the column switch or the front-ECU may be defective.

POSSIBLE CAUSES
- Malfunction of the headlamp washer motor
- Malfunction of the column switch
- Malfunction of the front-ECU
- Damaged harness wires and connectors

DIAGNOSIS PROCEDURE

Step 1. Check the diagnosis code.
When the ignition switch is turned to the LOCK (OFF) position, check that the ETACS-ECU does not set the diagnosis code.

Q: Is the diagnosis code set?
YES : Refer to diagnosis code chart P.54B-17.
NO : Go to Step 2.

Step 2. Pulse check
Check the input signals below which are related to the windshield wiper.

System switch	Check condition
Ignition switch (ACC)	When turned from the LOCK (OFF) position to the ACC position.
Headlamp washer switch	When the switch is turned from off to on.

OK: The MUT-II/III sounds or the voltmeter needle fluctuates.

Q: Is the check result normal?
All the signals are received normally : Go to Step 3.
The ignition switch (ACC) signal is not received. : Refer to inspection procedure N-1 "The ignition switch (ACC) signal is not received P.54B-298."
Headlamp washer switch signal is not received. : Refer to inspection procedure N-5 "The column switch (headlamp washer switch) signal is not received P.54B-319."

Step 3. Connector check: A-25 headlamp washer motor connector

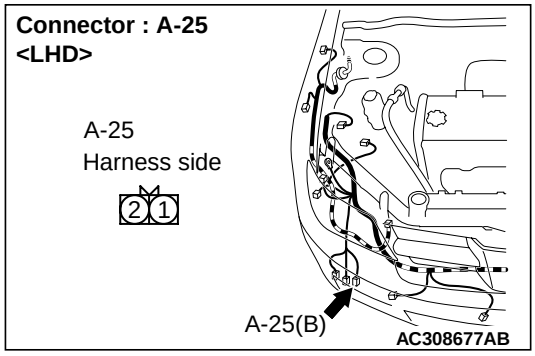

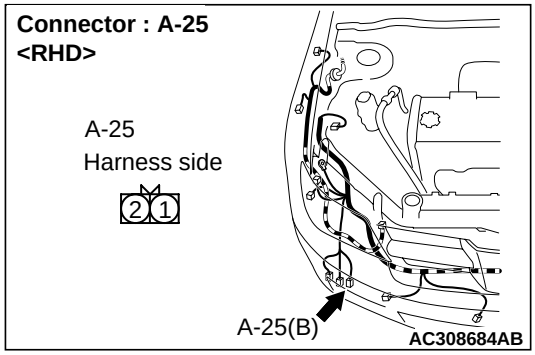

Q: Is the check result normal?
YES : Go to Step 4.
NO : Repair the connector.

Step 4. Check the headlamp washer motor assembly.
Refer to GROUP 51 – Headlamp washer P.51-45.

Q: Is the check result normal?
YES : Go to Step 5
NO : Replace the headlamp washer motor.

Step 5. Measure the resistance at the A-25 headlamp washer motor connector.

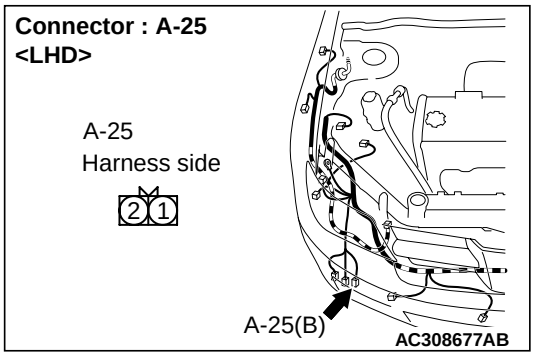

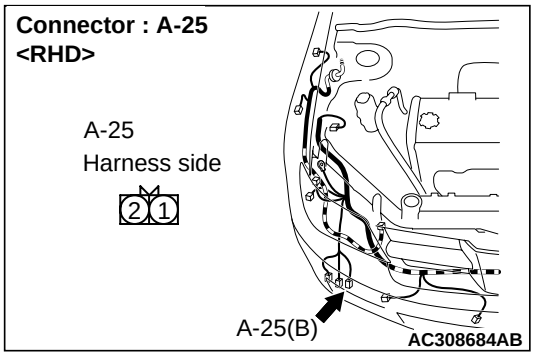

(1) Disconnect the connector, and measure at the wiring harness side.

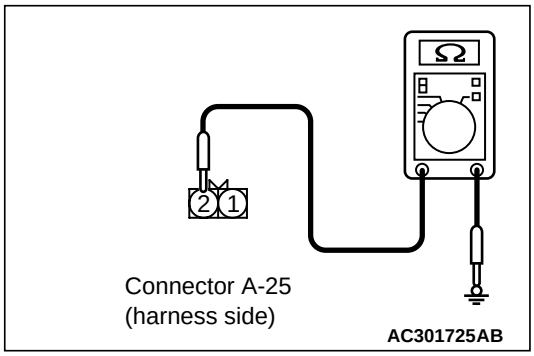

(2) Continuity between A-25 headlamp washer motor connector terminal No.2 and body earth
OK: 2Ω or less

Q: Is the check result normal?
YES : Go to Step 7.
NO : Go to Step 6.

Step 6. Check the wiring harness between A-25 headlamp washer motor connector terminal No.2 and body earth.

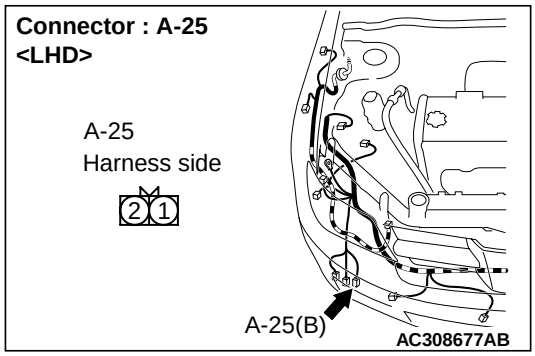

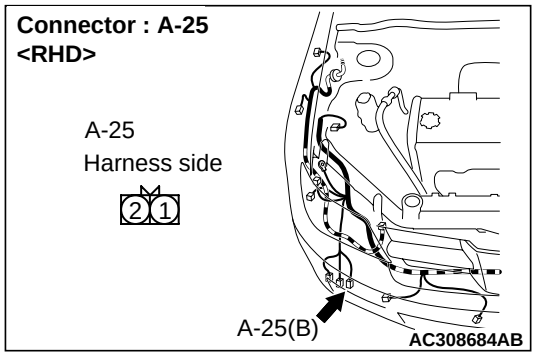

- Check the earth wires for open circuit.

Q: Is the check result normal?
YES : The trouble can be an intermittent malfunction (Refer to GROUP 00 – How to Cope with Intermittent Malfunction P.00-6).
NO : Repair the wiring harness.

Step 7. Connector check: A-11X front-ECU connector

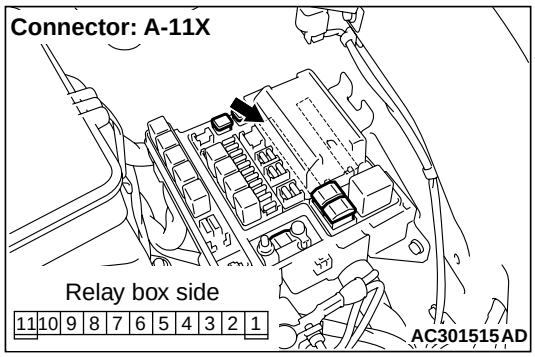

Q: Is the check result normal?
YES : Go to Step 8.
NO : Repair the connector.

Step 8. Measure the voltage at the A-11X front-ECU connector.

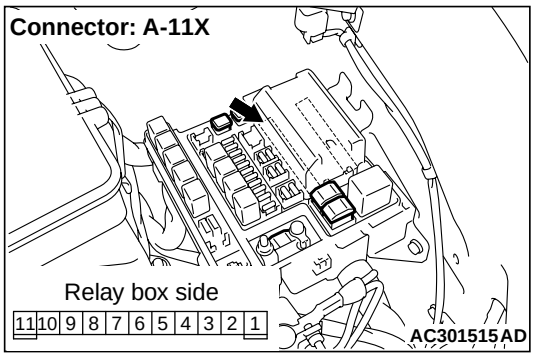

(1) Remove the front-ECU, and measure at the junction block side.
(2) Ignition switch: ACC

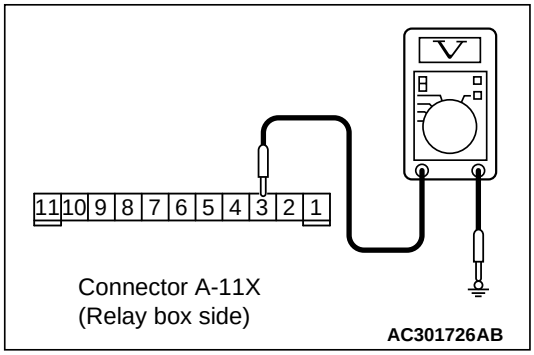

(3) Check the voltage between the A-11X front-ECU connector terminal No.3 and body earth.
OK: System voltage

Q: Is the check result normal?
YES : Go to Step 10.
NO : Go to Step 9.

Step 9. Check the wiring harness between A-11X front-ECU connector terminal No.3 and the fusible link (5).

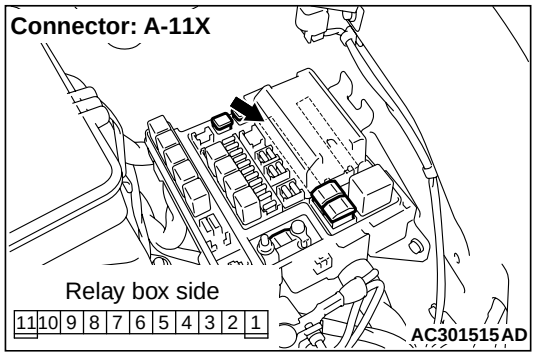

- Check the power supply line from the fusible link (5) for open circuit.

Q: Is the check result normal?
YES : The trouble can be an intermittent malfunction (Refer to GROUP 00 – How to Cope with Intermittent Malfunction P.00-6).
NO : Repair the wiring harness.

Step 10. Check the wiring harness between A-25 headlamp washer motor connector terminal No.1 and A-11X front-ECU connector terminal No.1.

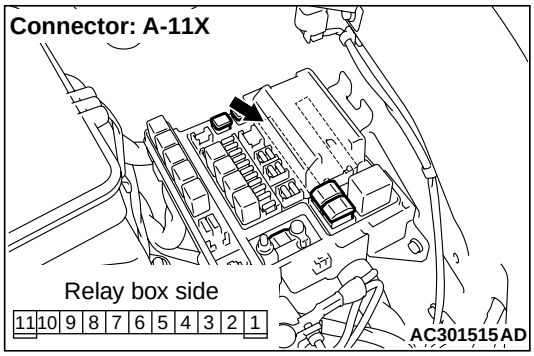

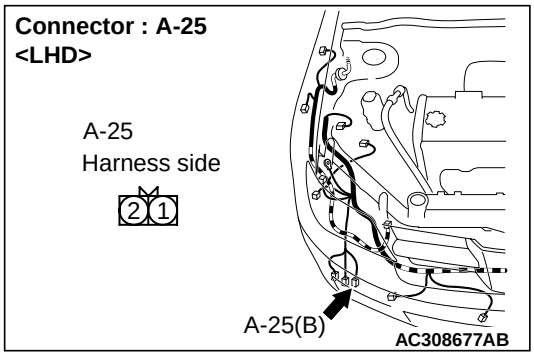

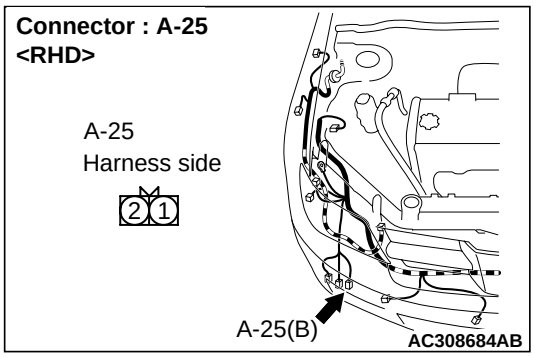

- Check the output line to headlamp washer motor for open circuit.

Q: Is the check result normal?
YES : Go to Step 11.
NO : Repair the wiring harness.

Step 11. Retest the system.
The headlamp washer should now work normally.

Q: Is the check result normal?
YES : The trouble can be an intermittent malfunction (Refer to GROUP 00 – How to Cope with Intermittent Malfunction P.00-6).
NO : Replace the front-ECU.

IGNITION KEY CYLINDER ILLUMINATION LAMP

INSPECTION PROCEDURE I-1: The ignition key cylinder illumination lamp does not illuminate/extinguish normally.

⚠ CAUTION

Whenever the ECU is replaced, ensure that the input and output signal circuits are normal.

Ignition Key Cylinder Illumination Lamp Circuit

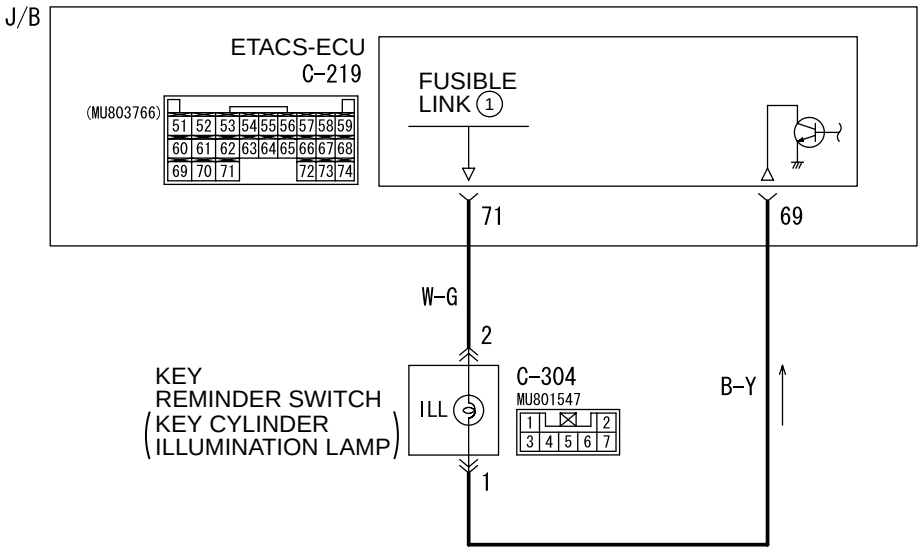

Wire colour code
B : Black LG : Light green G : Green L : Blue W : White Y : Yellow SB : Sky blue
BR : Brown O : Orange GR : Gray R : Red P : Pink V : Violet

W3Z10E08AA

COMMENTS ON TROUBLE SYMPTOM

The ETACS-ECU operates this function in accordance with the input signals below.

<Vehicles without keyless entry system>

- Ignition switch (IG1)
- Driver's door switch

<Vehicles with keyless entry system>

- Ignition switch (IG1)
- Key reminder switch
- Driver's door switch
- Interior lamp loaded signal

If this function does not work normally, these input signal circuit(s), the ignition key cylinder illumination lamp or the ETACS-ECU may be defective.

POSSIBLE CAUSES

- Malfunction of the key reminder switch
- Malfunction of the driver's door switch
- Malfunction of the ignition key cylinder illumination lamp
- Malfunction of the ETACS-ECU
- Damaged harness wires and connectors

DIAGNOSTIC PROCEDURE

Step 1. Check the operation of the room lamp.
Check that the room lamps illuminate and extinguish normally.

Q: Is the check result normal?
YES : Go to Step 2.
NO : Refer to inspection procedure M-1 "The front or rear room lamp does not illuminate/extinguish <vehicles without keyless entry system>P.54B-282." Or refer to inspection procedure M-2 "The front or rear room lamp does not illuminate/extinguish <vehicles with keyless entry system>P.54B-287."

Step 2. Pulse check
Check the input signals below, which are related to the ignition key cylinder illumination lamp.

System switch	Check condition
Ignition switch (IG1)	When turned from ACC to ON
Key reminder switch*	When the inserted ignition key is pulled out
Driver's door switch	When the driver's door is opened

*NOTE: *: Vehicles with keyless entry system*

OK: The MUT-II/III sounds or the voltmeter needle fluctuates.

Q: Is the check result normal?
All the signals are received normally. : Go to Step 3.
The ignition switch (IG1) signal is not received. : Refer to inspection procedure N-2 "The ignition switch (IG1) signal is not received P.54B-301."
The key reminder switch signal is not received. : Refer to inspection procedure N-9 "The key reminder switch signal is not received P.54B-334."
The driver's door switch signal is not received. : Refer to inspection procedure N-4 "The front door switch signal is not received <L.H. drive vehicles>P.54B-315 or <R.H. drive vehicles>P.54B-317."

Step 3. Connector check: C-304 key reminder switch connector

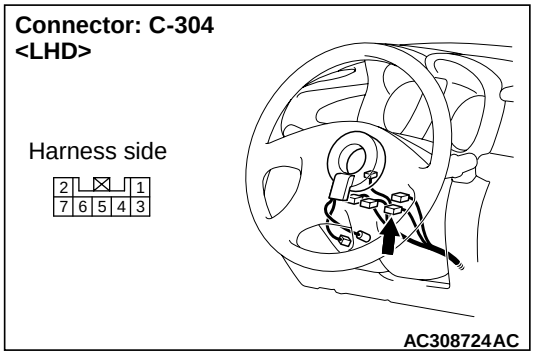

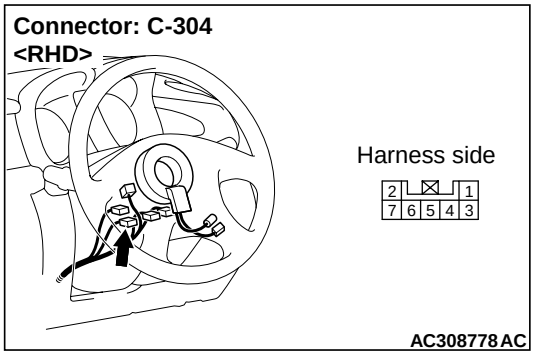

Q: Is the check result normal?
YES : Go to Step 4.
NO : Repair the defective connector.

Step 4. Check the bulb of the ignition key cylinder illumination lamp.
Check the bulb of the ignition key cylinder illumination lamp.

Q: Is the check result normal?
YES : Go to Step 5.
NO : Replace the bulb of the ignition key cylinder illumination lamp.

Step 5. Connector check: C-219 ETACS-ECU connector

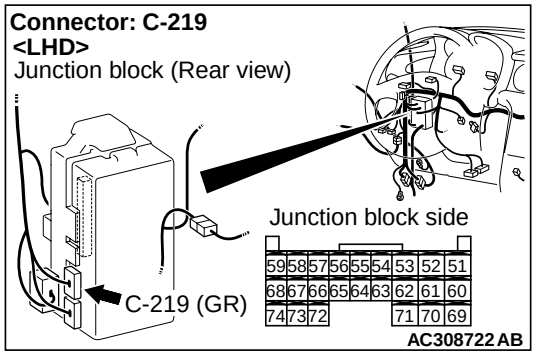

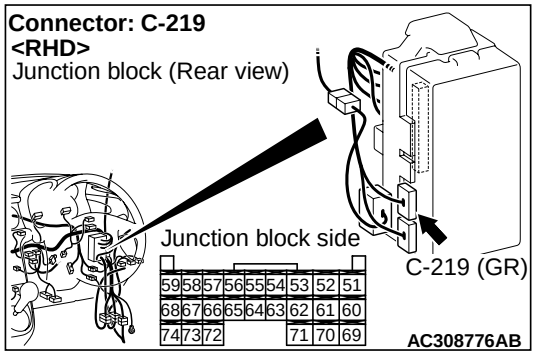

Q: Is the check result normal?
YES : Go to Step 6.
NO : Repair the defective connector.

Step 6. Check the wiring harness from C-219 ETACS-ECU connector terminal Nos. 69 and 71 to C-304 ignition key cylinder illumination lamp connector terminal Nos. 1 and 2.

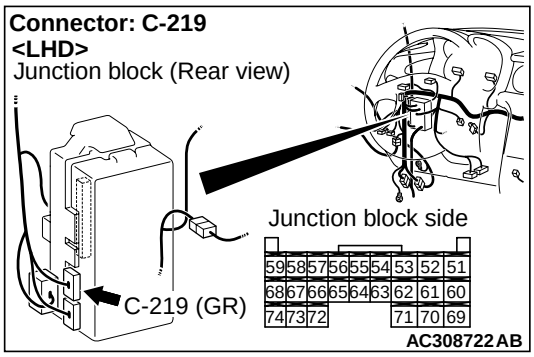

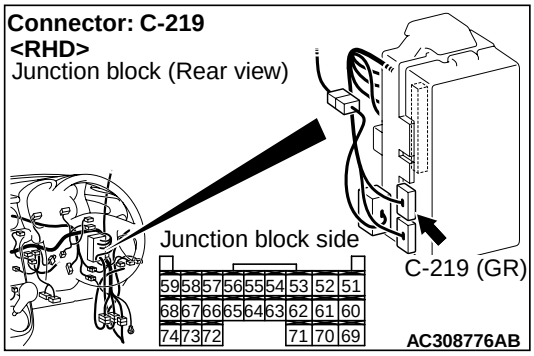

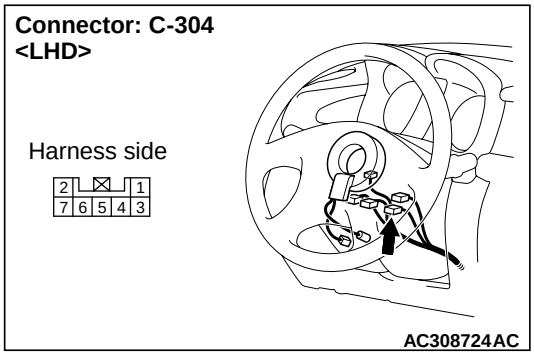

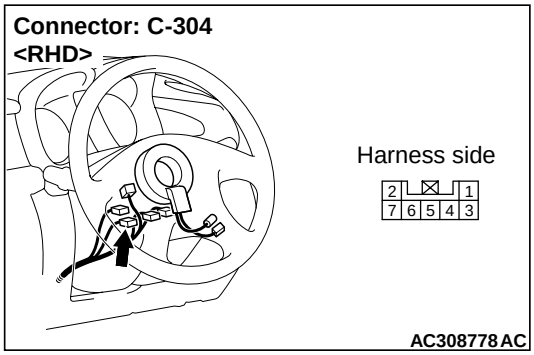

- Check the input and output lines for open circuit.

Q: Is the check result normal?
YES : Go to Step 7.
NO : Repair the wiring harness.

Step 7. Retest the system.
Check that the ignition key cylinder illumination lamp illuminates/extinguishes normally.

Q: Is the check result normal?

YES : The trouble can be an intermittent malfunction (Refer to GROUP 00 – How to Cope with Intermittent Malfunction P.00-6).

NO : Replace the ETACS-ECU.

HEADLAMP AND TAIL LAMP

INSPECTION PROCEDURE J-1: The tail lamps do not illuminate normally.

⚠ CAUTION

Whenever the ECU is replaced, ensure that the input and output signal circuits are normal.

Tail Lamp Relay Circuit

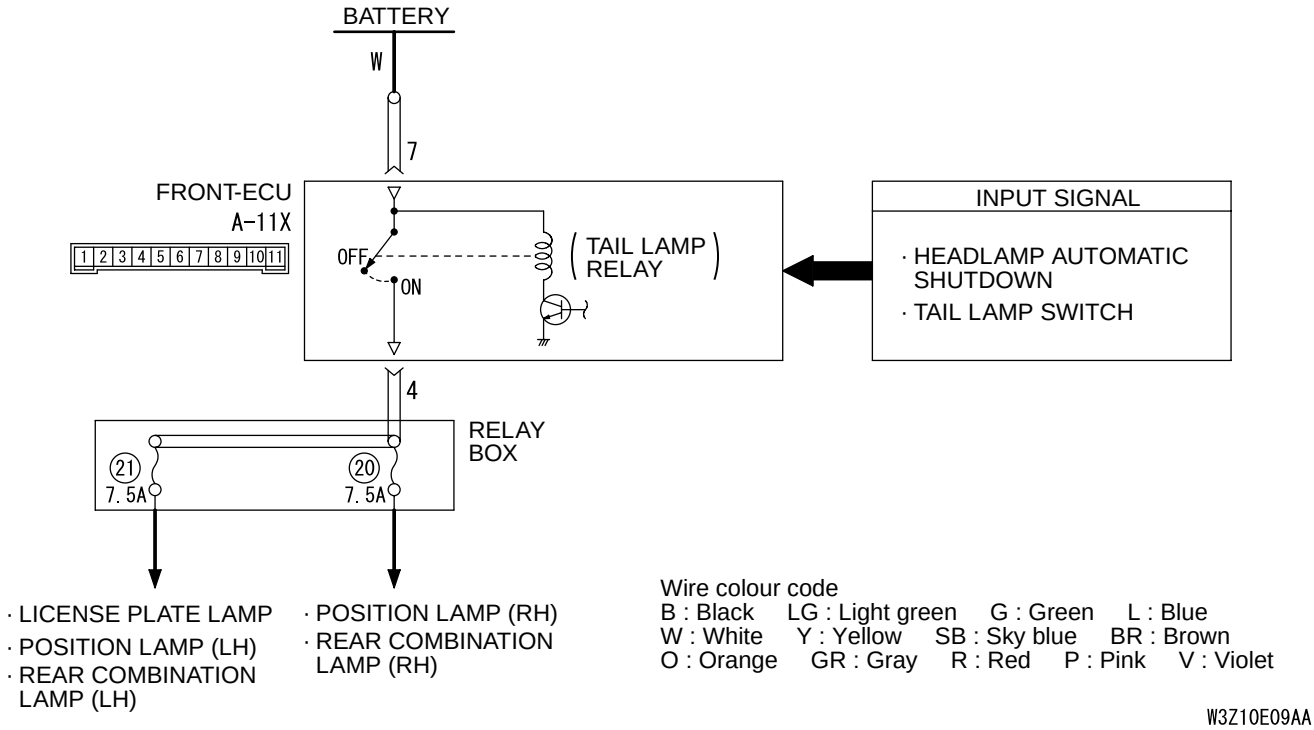

COMMENTS ON TROUBLE SYMPTOM

If all the tail lamps do not illuminate, the tail lamp switch input circuit or the front-ECU may be defective.

POSSIBLE CAUSES

- Malfunction of the column switch
- Malfunction of the front-ECU
- Damaged harness wires and connectors

DIAGNOSTIC PROCEDURE

Step 1. Check the diagnosis code.
When the ignition switch is turned to the LOCK (OFF) position, check that the ETACS-ECU does not set the diagnosis code.

Q: Is the diagnosis code set?
YES : Refer to diagnosis code chart P.54B-17.
NO : Go to Step 2.

Step 2. Pulse check
Check the input signal from the tail lamp switch.

System switch	Check condition
Ignition switch (IG1)	When turned from ACC to ON
Tail lamp switch	When the lighting switch is turned to the TAIL position

OK: The MUT-II/III sounds or the voltmeter needle fluctuates.

Q: Is the check result normal?
All the signals are received normally. : Go to Step 3.
The ignition switch (IG1) signal is not received. : Refer to inspection procedure N-2 "The ignition switch (IG1) signal is not received P.54B-301."
The tail lamp switch signal is not received. : Refer to inspection procedure N-5 "The column switch (lighting and turn-signal lamp switch) signal is not received P.54B-319."

Step 3. Connector check: A-11X front-ECU connector

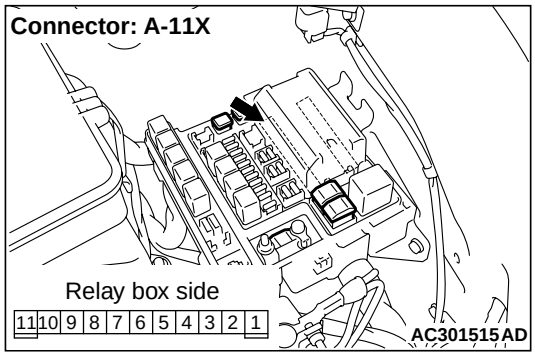

Q: Is the check result normal?
YES : Go to Step 4.
NO : Repair the defective connector.

Step 4. Measure the voltage at A-11X front-ECU connector.

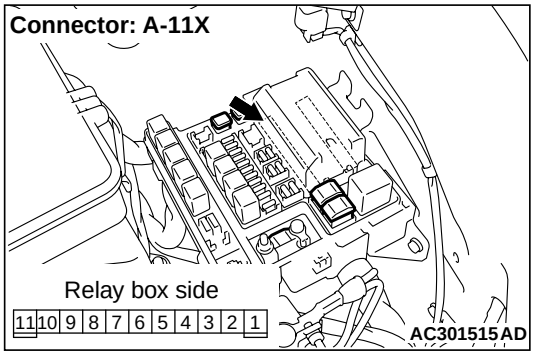

(1) Remove the front-ECU, and measure at the relay box side.

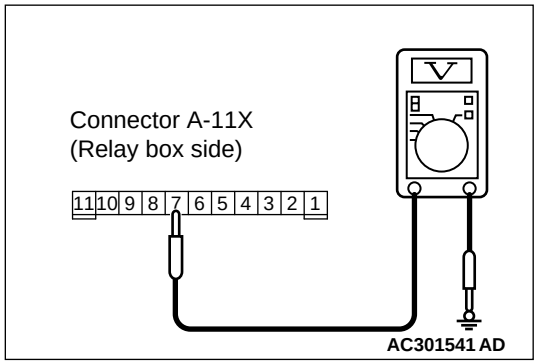

(2) Voltage between A-11X front-ECU connector terminal No.7 and body earth

OK: System voltage

Q: Is the check result normal?
YES : Go to Step 6.
NO : Go to Step 5.

Step 5. Check the wiring harness between A-11X front-ECU connector terminal No.7 and the battery.
- Check the power supply line for open circuit.

Q: Is the check result normal?
YES : The trouble can be an intermittent malfunction (Refer to GROUP 00 – How to Cope with Intermittent Malfunction P.00-6).
NO : Repair the wiring harness.

Step 6. Retest the system.
Check that the tail lamps illuminate normally.

Q: Is the check result normal?
YES : The trouble can be an intermittent malfunction (Refer to GROUP 00 – How to Cope with Intermittent Malfunction P.00-6).
NO : Replace the front-ECU.

INSPECTION PROCEDURE J-2: The low-beam headlamps do not illuminate normally.

⚠ CAUTION

Whenever the ECU is replaced, ensure that the input and output signal circuits are normal.

Headlamp Relay (Low-Beam) Circuit

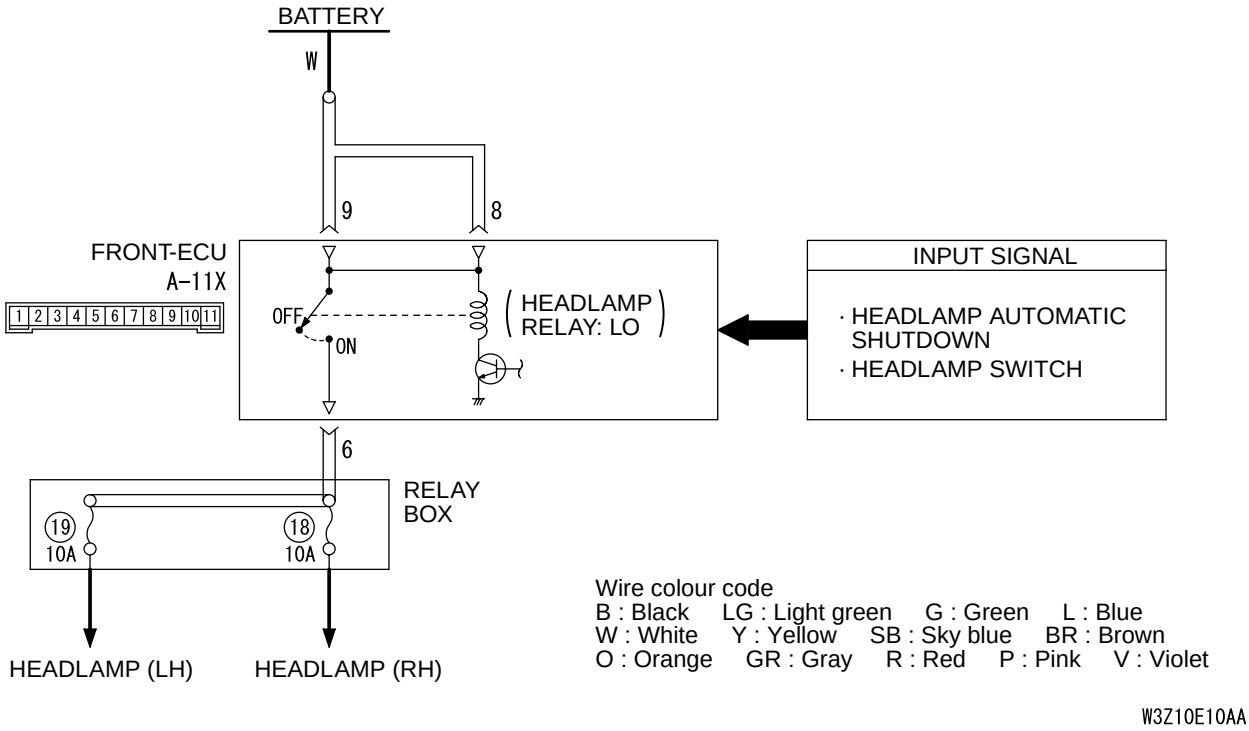

COMMENTS ON TROUBLE SYMPTOM

If the low-beam headlamps do not illuminate, the headlamp switch input circuit or the front-ECU may be defective.

POSSIBLE CAUSES

- Malfunction of the column switch
- Malfunction of the front-ECU
- Damaged harness wires and connectors

DIAGNOSTIC PROCEDURE

Step 1. Check the diagnosis code.
When the ignition switch is turned to the LOCK (OFF) position, check that the ETACS-ECU does not set the diagnosis code.

Q: Is the diagnosis code set?
YES : Refer to diagnosis code chart P.54B-52.
NO : Go to Step 2.

Step 2. Pulse check
Check the input signal from the headlamp switch.

System switch	Check condition
Ignition switch (IG1)	When turned from ACC to ON
Headlamp switch	When the lighting switch is turned to the HEADLAMP position

OK: The MUT-II/III sounds or the voltmeter needle fluctuates.

Q: Is the check result normal?
All the signals are received normally. : Go to Step 3.
The ignition switch (IG1) signal is not received. : Refer to inspection procedure N-2 "The ignition switch (IG1) signal is not received P.54B-301."
The headlamp switch signal is not received. : Refer to inspection procedure N-5 "The column switch (lighting and turn-signal lamp switch) signal is not received P.54B-319."

Step 3. Connector check: A-11X front-ECU connector

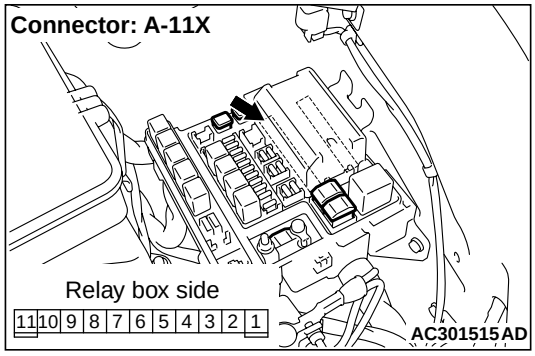

Q: Is the check result normal?
YES : Go to Step 4.
NO : Repair the defective connector.

Step 4. Measure the voltage at A-11X front-ECU connector.

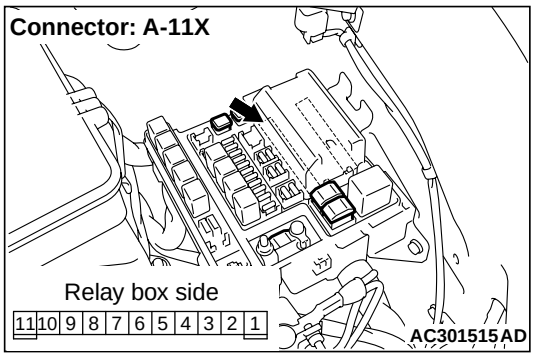

(1) Remove the front-ECU, and measure at the relay box side.

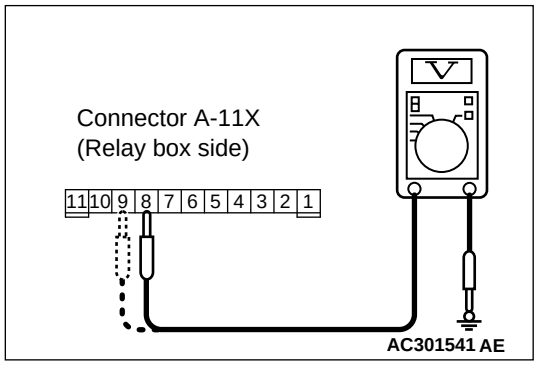

(2) Voltage between A-11X front-ECU connector terminal Nos. 8, 9 and body earth

OK: System voltage

Q: Is the check result normal?
YES : Go to Step 6.
NO : Go to Step 5.

Step 5. Check the wiring harness between A-11X front-ECU connector terminal Nos. 8, 9 and the battery.

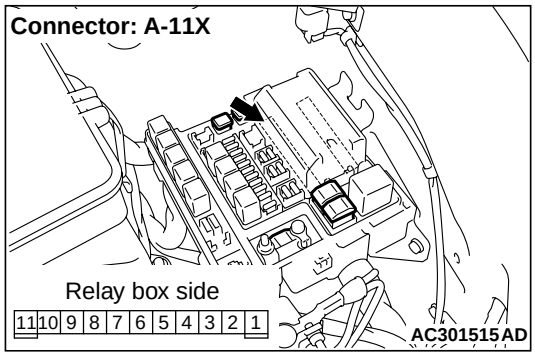

- Check the power supply line for open circuit.

Q: Is the check result normal?

YES : The trouble can be an intermittent malfunction (Refer to GROUP 00 – How to Cope with Intermittent Malfunction P.00-6).

NO : Repair the wiring harness.

Step 6. Retest the system.

Check that the low-beam headlamps illuminate normally.

Q: Is the check result normal?

YES : The trouble can be an intermittent malfunction (Refer to GROUP 00 – How to Cope with Intermittent Malfunction P.00-6).

NO : Replace the front-ECU.

INSPECTION PROCEDURE J-3: The high-beam headlamps do not illuminate normally.

⚠ CAUTION
Whenever the ECU is replaced, ensure that the input and output signal circuits are normal.

Headlamp Relay (High-Beam) Circuit

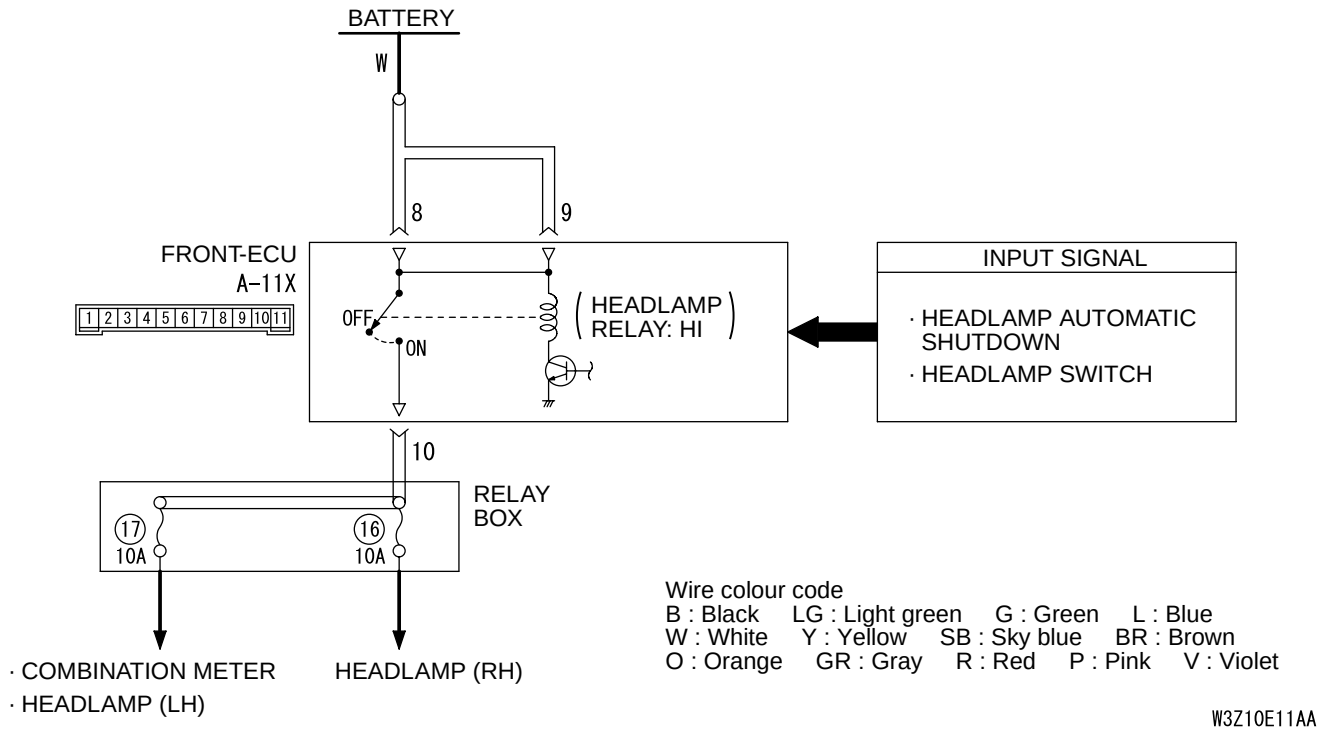

COMMENTS ON TROUBLE SYMPTOM
If the high-beam headlamps do not illuminate, the dimmer switch input circuit or the front-ECU may be defective.

POSSIBLE CAUSES
- Malfunction of the column switch
- Malfunction of the front-ECU
- Damaged harness wires and connectors

DIAGNOSTIC PROCEDURE

Step 1. Check that the headlamps operate.
Check that the low-beam headlamps illuminate and extinguish normally.

Q: Is the check result normal?

YES : Go to Step 2.
NO : Refer to inspection procedure J-2 "The low-beam headlamps do not illuminate normally P.54B-210."

Step 2. Pulse check
Check the input signal from the dimmer switch.

System switch	Check condition
Dimmer switch	When the dimmer switch is turned from off to on

OK: The MUT-II/III sounds or the voltmeter needle fluctuates.

Q: Is the check result normal?
YES : Go to Step 3.
NO : Refer to inspection procedure N-5 "The column switch (lighting and turn-signal lamp switch) signal is not received P.54B-319."

Step 3. Retest the system.
Check that the high-beam headlamps illuminate normally.

Q: Is the check result normal?

YES : The trouble can be an intermittent malfunction (Refer to GROUP 00 – How to Cope with Intermittent Malfunction P.00-6).
NO : Replace the front-ECU.

INSPECTION PROCEDURE J-4: The high-beam and low-beam headlamps do not illuminate when the passing switch is operated.

⚠ CAUTION
Whenever the ECU is replaced, ensure that the input and output signal circuits are normal.

COMMENTS ON TROUBLE SYMPTOM
If the low-beam and high-beam headlamps are normal, the passing switch input signal circuit or the front-ECU may be defective.

POSSIBLE CAUSES
- Malfunction of the column switch
- Malfunction of the front-ECU
- Damaged harness wires and connectors

DIAGNOSTIC PROCEDURE

Step 1. Check that the headlamps operate.
Check that the low-beam and high-beam headlamps work normally.

Q: Is the check result normal?
YES : Go to Step 2.
NO : Repair the headlamps. Refer to trouble symptom chart P.54B-41.

Step 2. Pulse check
Check the input signal from the passing switch.

System switch	Check condition
Passing lamp switch	When the passing switch is turned from off to on

OK: The MUT-II/III sounds or the voltmeter needle fluctuates.

Q: Is the check result normal?
YES : Go to Step 3.
NO : Refer to inspection procedure N-5 "The column switch (lighting and turn-signal lamp switch) signal is not received P.54B-319."

Step 3. Retest the system.
When the passing switch is turned on, check if the headlamps illuminate normally.

Q: Is the check result normal?
YES : The trouble can be an intermittent malfunction (Refer to GROUP 00 – How to Cope with Intermittent Malfunction P.00-6).
NO : Replace the front-ECU.

INSPECTION PROCEDURE J-5: The headlamp automatic-shutdown function does not work normally.

⚠ CAUTION

Whenever the ECU is replaced, ensure that the input and output signal circuits are normal.

Headlamp Automatic Shutdown Function

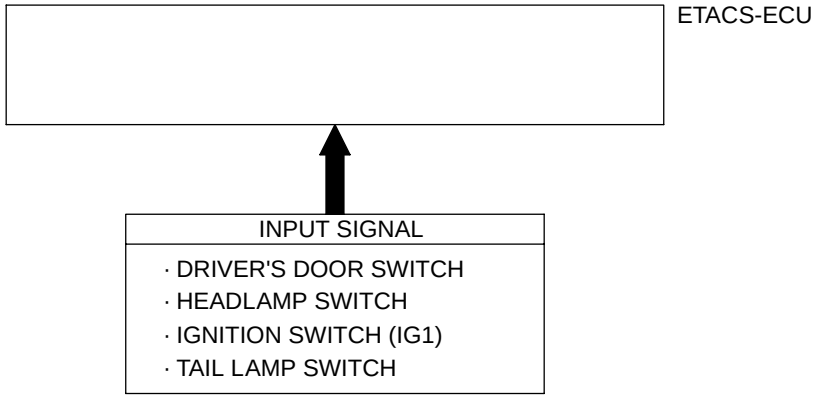

W3Z10E12AA

COMMENTS ON TROUBLE SYMPTOM

The ETACS-ECU operates this function in accordance with the input signals below.

- Ignition switch (IG1)
- Driver's door switch
- Tail lamp switch
- Headlamp switch

If this function does not work normally, these input signal circuit(s), the front-ECU or the ETACS-ECU may be defective. Note that this function can be disabled/enabled by the adjustment function (default setting; enabled).

POSSIBLE CAUSES

- Malfunction of the driver's door switch
- Malfunction of the front-ECU
- Malfunction of the column switch
- Malfunction of the ETACS-ECU
- Damaged harness wires and connectors

DIAGNOSTIC PROCEDURE

Step 1. Check the adjustment function.
Check that the headlamp automatic-shutdown function has been enabled by using the adjustment function.

Q: Is the check result normal?
YES : Go to Step 2.
NO : Enable the headlamp automatic-shutdown function by using the adjustment function. Refer to P.54B-393.

Step 2. Check that the headlamps operate.
Check that the low-beam and high-beam headlamps work normally.

Q: Is the check result normal?
YES : Go to Step 3.
NO : Repair the headlamps. Refer to trouble symptom chart P.54B-41.

Step 3. Pulse check
Check the input signals below, which are related to the headlamp automatic-shutdown function.

System switch	Check condition
Ignition switch (IG1)	When turned from ACC to ON
Driver's door switch	When the driver's door is opened
Tail lamp switch	When the lighting switch is turned to the TAIL position

OK: The MUT-II/III sounds or the voltmeter needle fluctuates.

Q: Is the check result normal?
All the signals are received normally. : Go to Step 4.
The ignition switch (IG1) signal is not received. : Refer to inspection procedure N-2 "The ignition switch (IG1) signal is not received P.54B-301."
The driver's door switch signal is not received. : Refer to inspection procedure N-4 "The front door switch signal is not received <L.H. drive vehicles>P.54B-315 or <R.H. drive vehicles>P.54B-317."
The tail lamp switch signal is not received. : Refer to inspection procedure N-5 "The column switch (lighting and turn-signal lamp switch) signal is not received P.54B-319."

Step 4. Retest the system.
Replace the ETACS-ECU, and then check that the headlamp automatic-shutdown function works normally.
(1) Replace the ETACS-ECU.
(2) Check that the headlamp automatic-shutdown function works normally.

Q: Is the check result normal?
YES : The trouble can be an intermittent malfunction (Refer to GROUP 00 – How to Cope with Intermittent Malfunction P.00-6).
NO : Replace the front-ECU.

INSPECTION PROCEDURE J-6: Any of tail lamps, position lamps or licence plate lamp does not illuminate.

⚠ CAUTION

Whenever the ECU is replaced, ensure that the input and output signal circuits are normal.

Tail lamps, Position Lamps and License Plate Lamps Circuit <LHD>

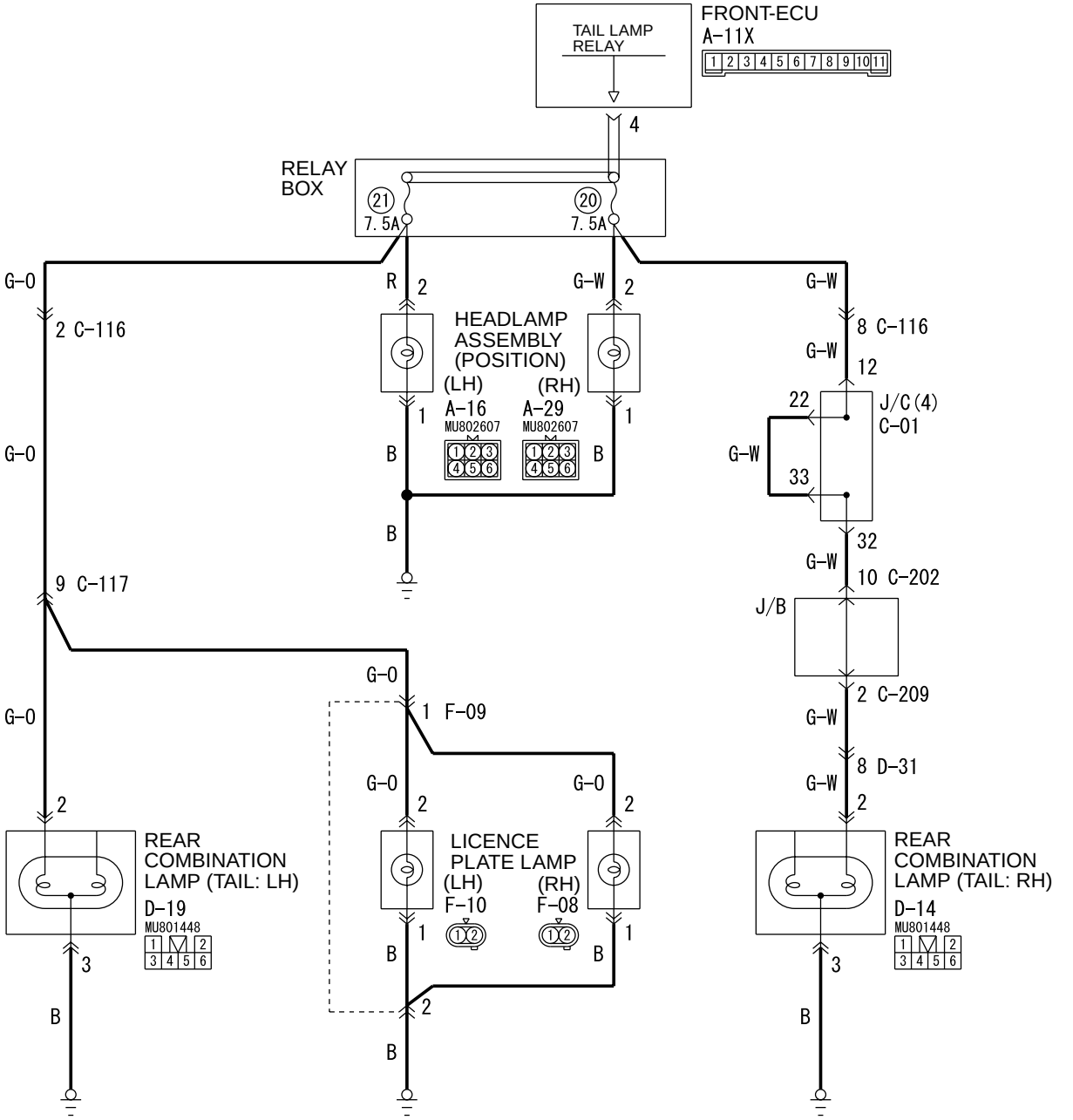

Wire colour code
B : Black LG : Light green G : Green L : Blue W : White Y : Yellow SB : Sky blue
BR : Brown O : Orange GR : Gray R : Red P : Pink V : Violet

W4Z54E23AA

Taillamps, Position Lamps and License Plate Lamps Circuit <RHD>

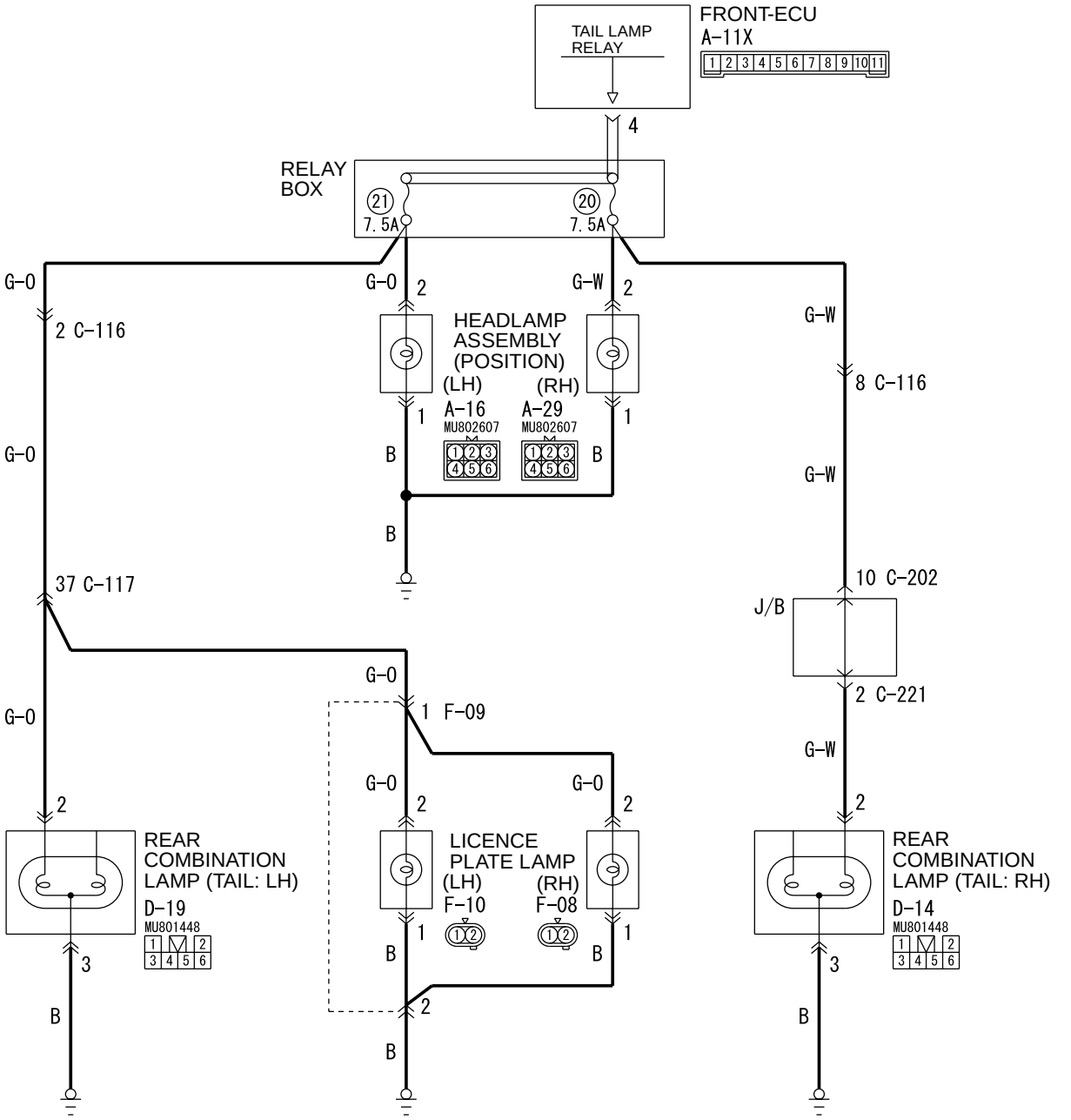

Wire colour code
B : Black LG : Light green G : Green L : Blue W : White Y : Yellow SB : Sky blue
BR : Brown O : Orange GR : Gray R : Red P : Pink V : Violet

W4Z54E24AA

COMMENTS ON TROUBLE SYMPTOM

If the tail lamps, the position lamps or the licence plate lamps do not illuminate, the wiring harness connector(s), the bulb or the fuse may be defective or burned out.

POSSIBLE CAUSES

- Burned-out bulb
- Damaged harness wires and connectors

DIAGNOSTIC PROCEDURE

Step 1. Connector check: D-14 <right tail lamp> or D-19 <left tail lamp> rear combination lamp connector, A-29 <right position lamp> or A-16 <left position lamp> headlamp assembly connector, F-08 <right licence plate lamp> or F-10 <left licence plate lamp> licence plate lamp connector

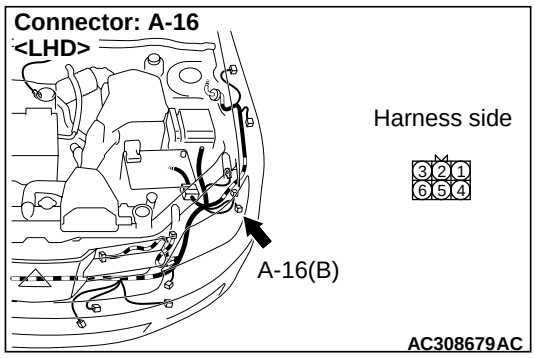

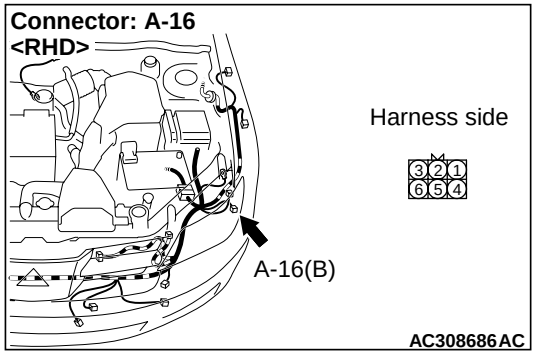

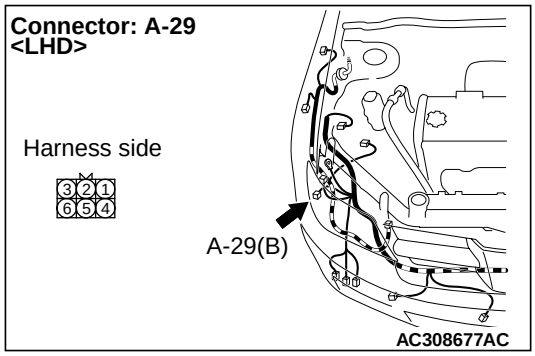

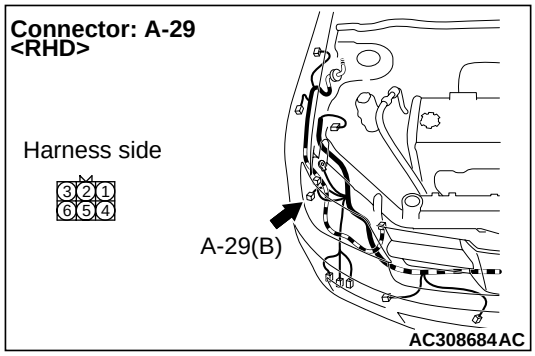

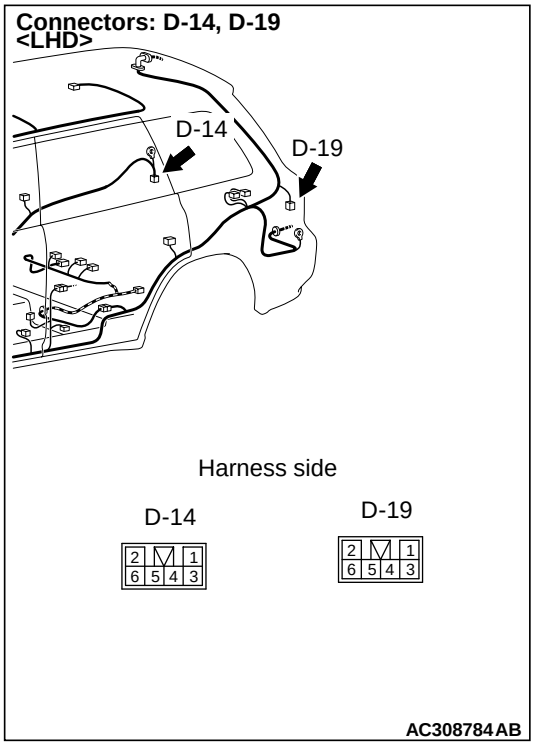

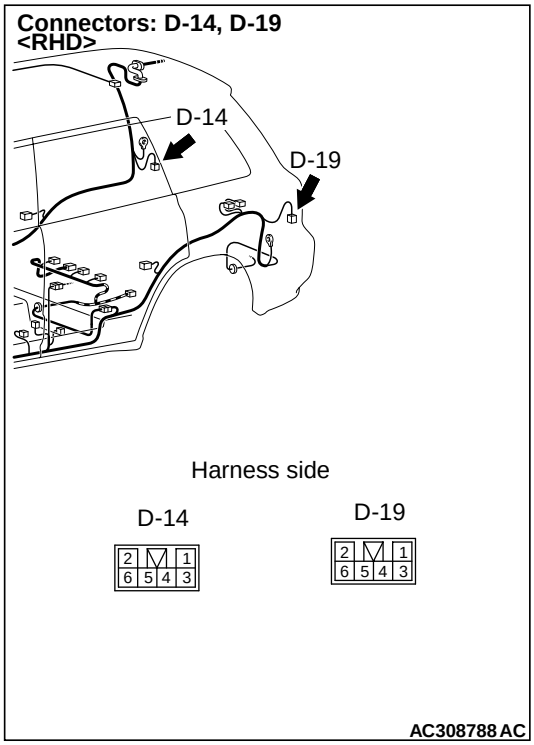

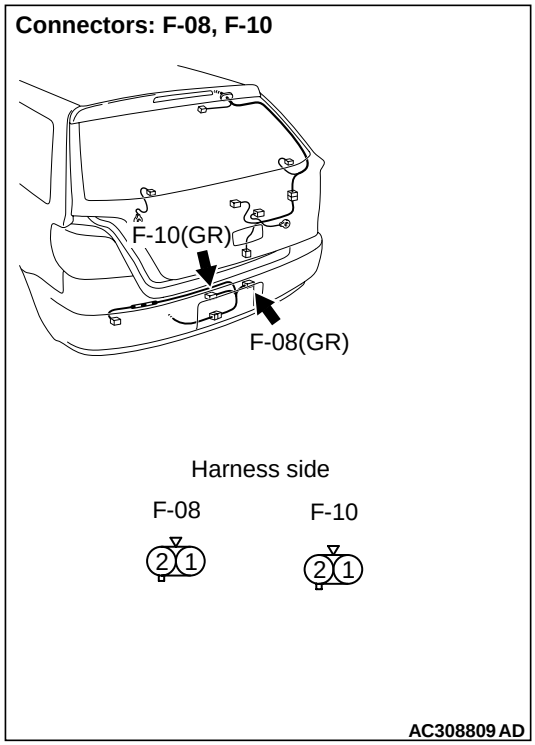

Q: Is the check result normal?
YES : Go to Step 2.
NO : Repair the defective connector.

Step 2. Check the bulbs of the tail lamps, the position lamp or the licence plate lamp.
Check the bulb of the lamp which does not illuminate.

Q: Is the check result normal?
YES : Go to Step 3.
NO : Replace the bulb of the lamp which does not illuminate.

Step 3. Measure the resistance at the D-14 <right tail lamp> or D-19 <left tail lamp> rear combination lamp connector, the A-29 <right position lamp> or A-16 <left position lamp> headlamp assembly connector, the F-08 <right licence plate lamp> or F-10 <left licence plate lamp> licence plate lamp connector.

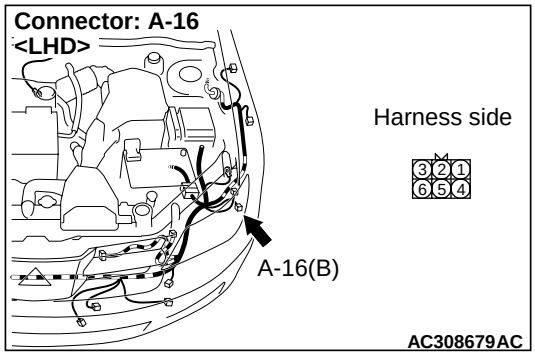

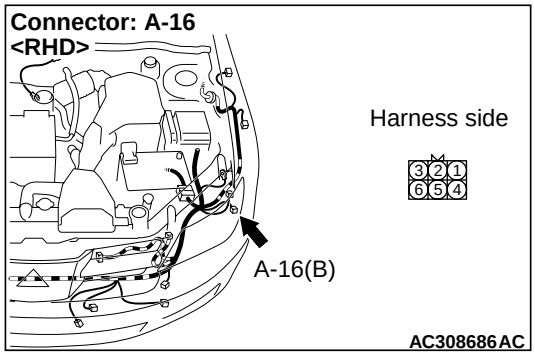

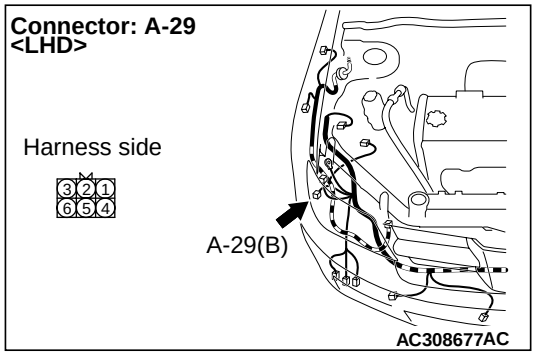

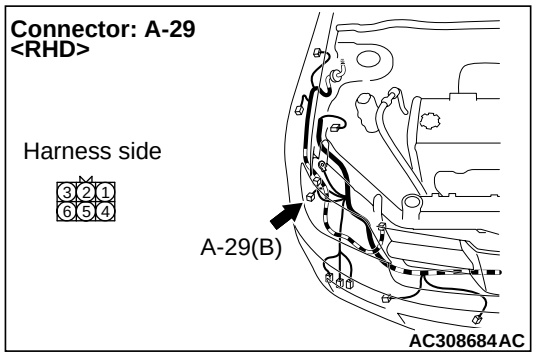

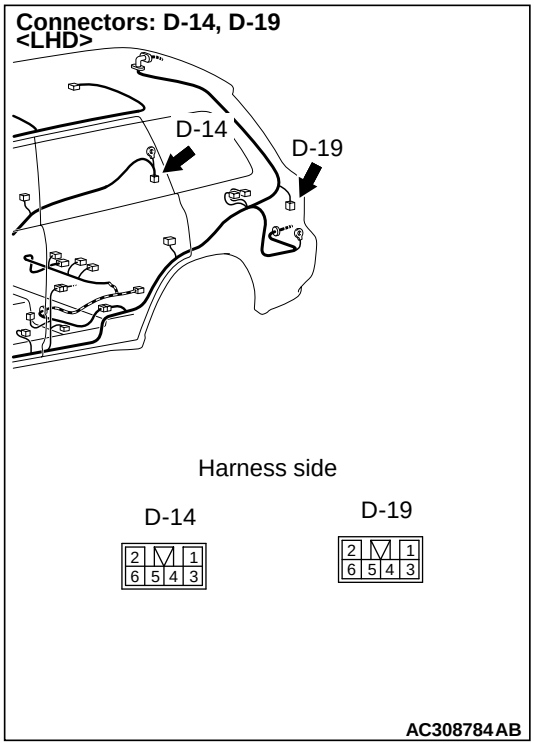

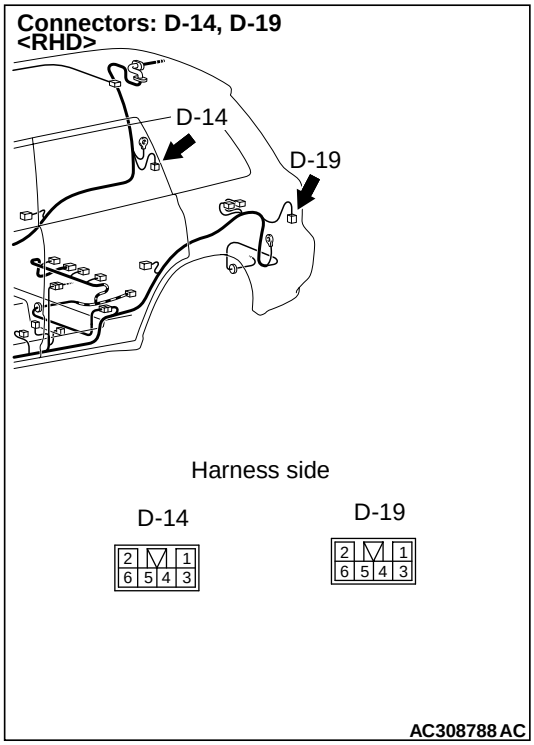

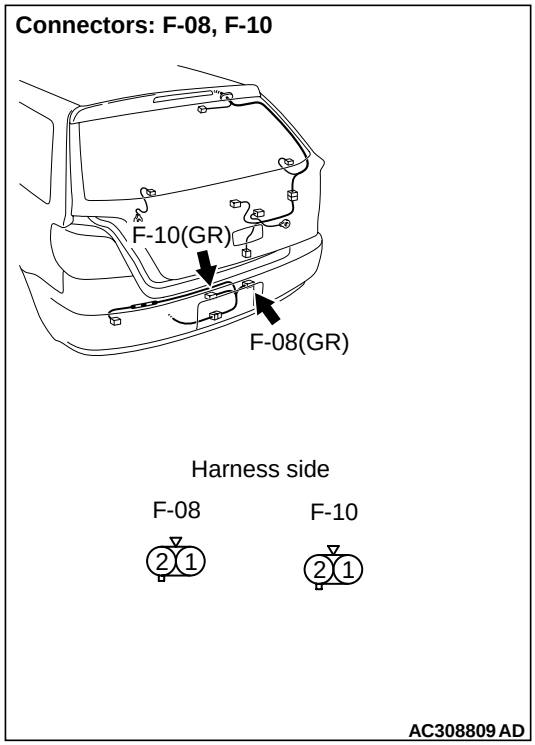

(1) Disconnect the connector, and measure at the wiring harness side.
(2) Check the resistance between the lamp connector and body earth.

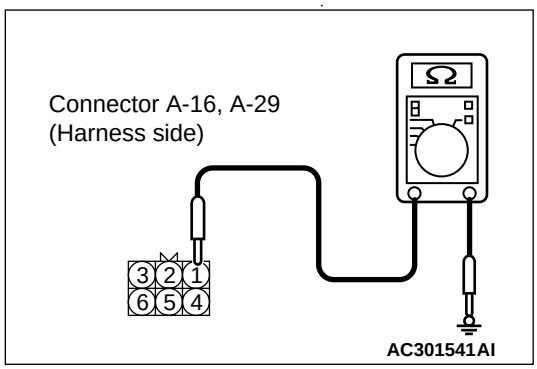

Resistance between A-16 <position LH> headlamp assembly connector terminal No.1 and body earth
- Resistance between A-29 <position RH> headlamp assembly connector terminal No.1 and body earth

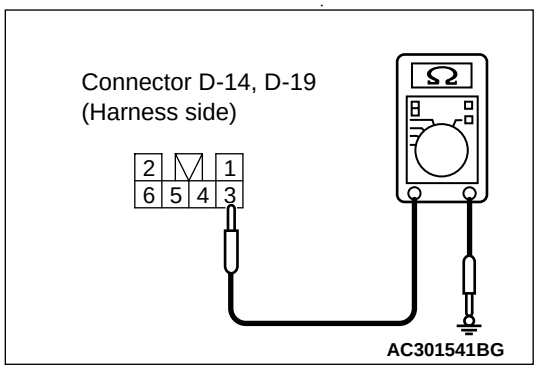

Resistance between D-14 <right tail lamp> rear combination lamp connector terminal No.3 and body earth
- Resistance between D-19 <left tail lamp> rear combination lamp connector terminal No.3 and body earth

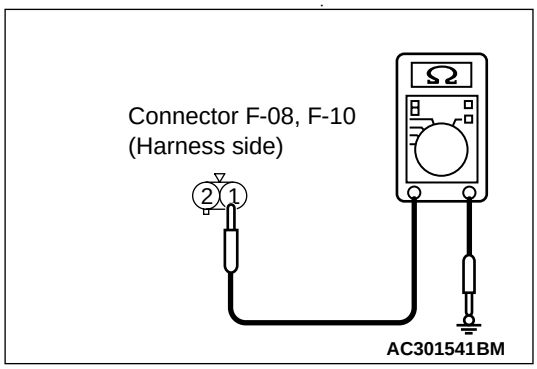

Resistance between F-08 <licence plate lamp, RH> licence plate lamp connector terminal No.1 and body earth

- Resistance between F-10 <licence plate lamp, LH> licence plate lamp connector terminal No.1 and body earth

OK: 2 Ω or less

Q: Is the check result normal?
YES : Go to Step 5.
NO : Go to Step 4.

Step 4. Check the wiring harness from D-14 <right tail lamp> or D-19 <left tail lamp> rear combination lamp connector terminal No.3, A-29 <right position lamp> or A-16 <left position lamp> headlamp connector terminal No.1 or F-08 <right licence plate lamp> or F-10 <right licence plate lamp> licence plate lamp connector terminal No.1 to body earth.

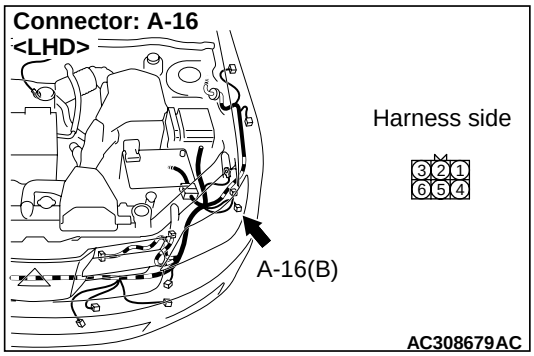

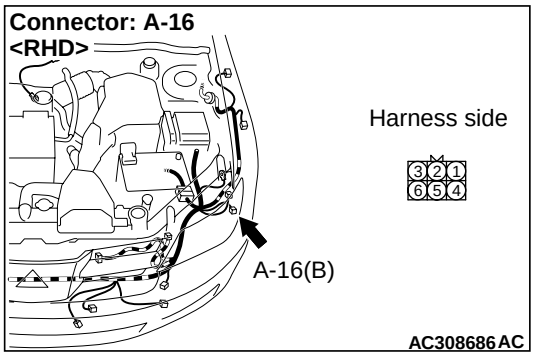

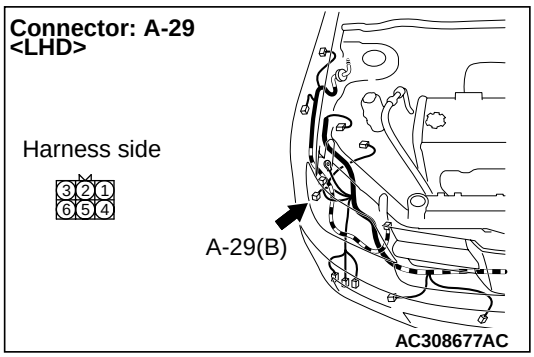

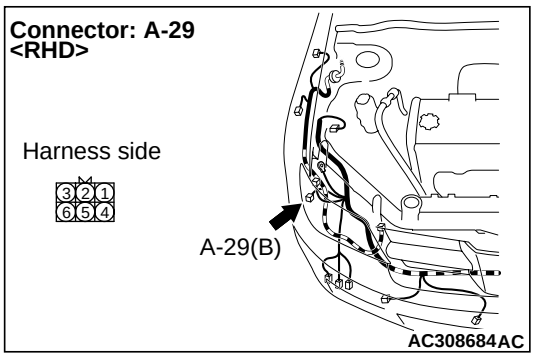

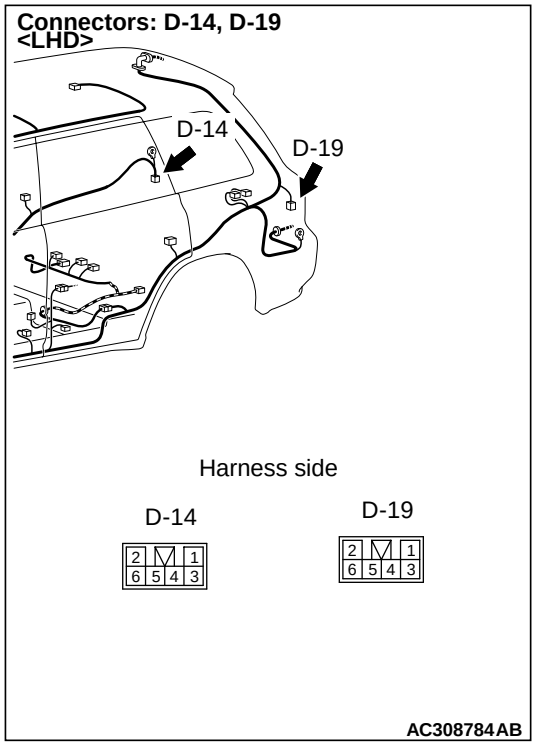

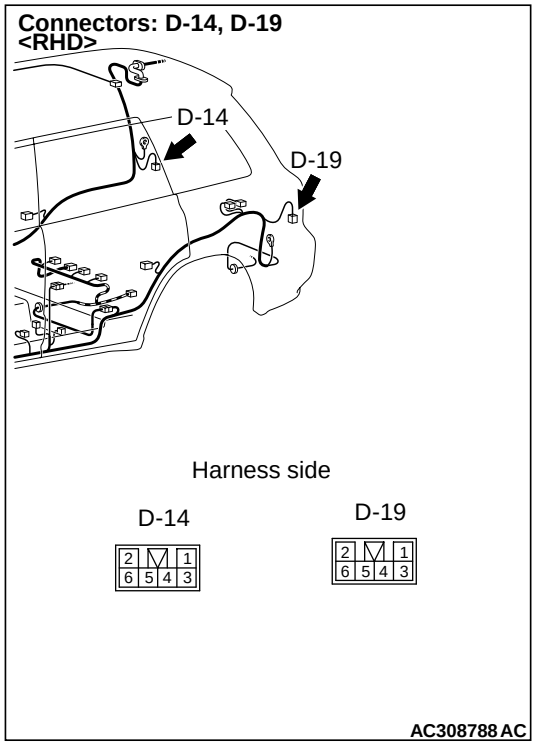

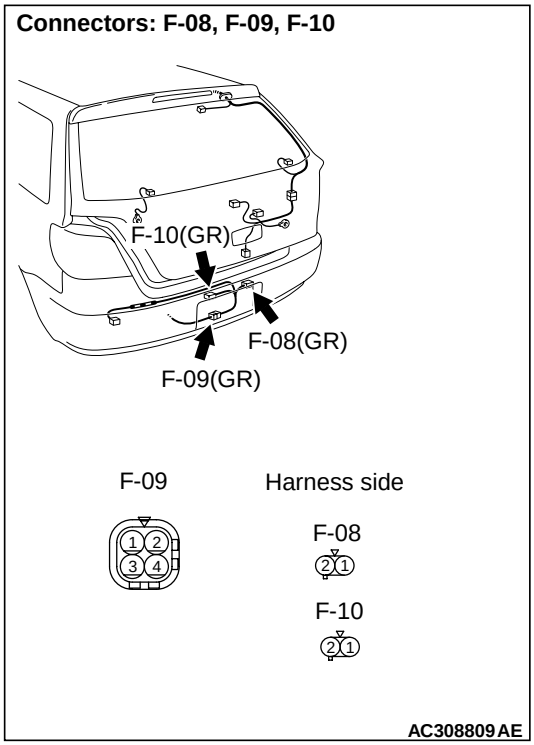

NOTE: Prior to the wiring harness inspection, check intermediate connector F-09 <licence plate lamp>, and repair if necessary.

- Check the earth wires for open circuit.

Q: Is the check result normal?
YES : Go to Step 7.
NO : Repair the wiring harness.

Step 5. Connector check: A-11X front-ECU connector

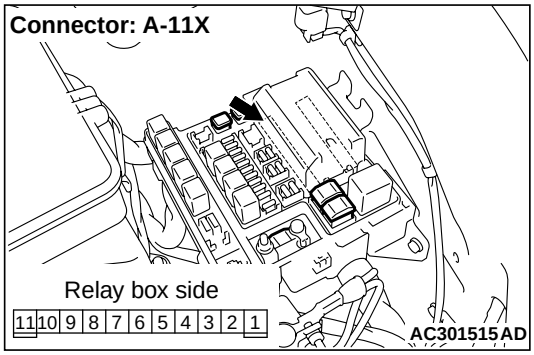

Q: Is the check result normal?
YES : Go to Step 6.
NO : Repair the defective connector.

Step 6. Check the wiring harness from D-14 <right tail lamp> or D-19 <left tail lamp> rear combination lamp connector terminal No.2, A-29 <right position lamp> or A-16 <left position lamp> headlamp assembly connector terminal No.2, F-08 <right licence plate lamp> or F-10 <left licence plate lamp> licence plate lamp connector terminal No.2 to A-11X front-ECU connector terminal No.4.

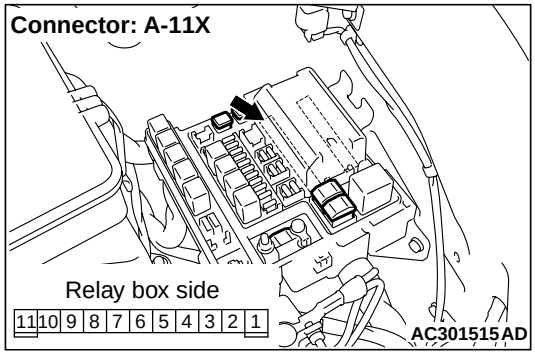

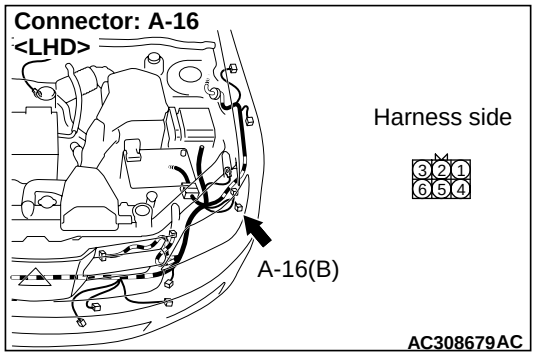

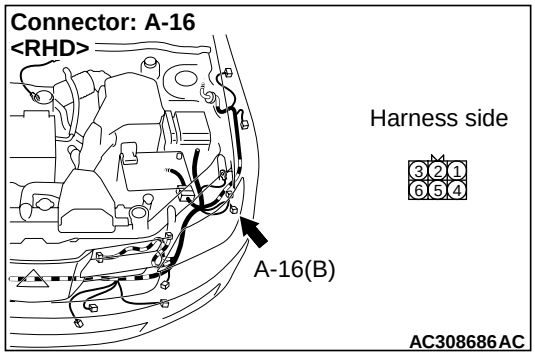

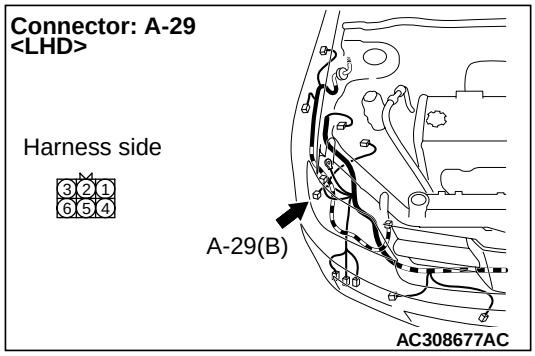

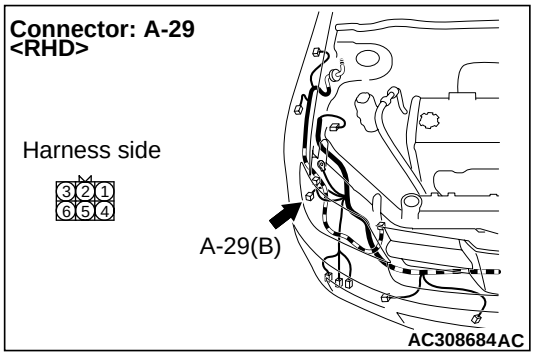

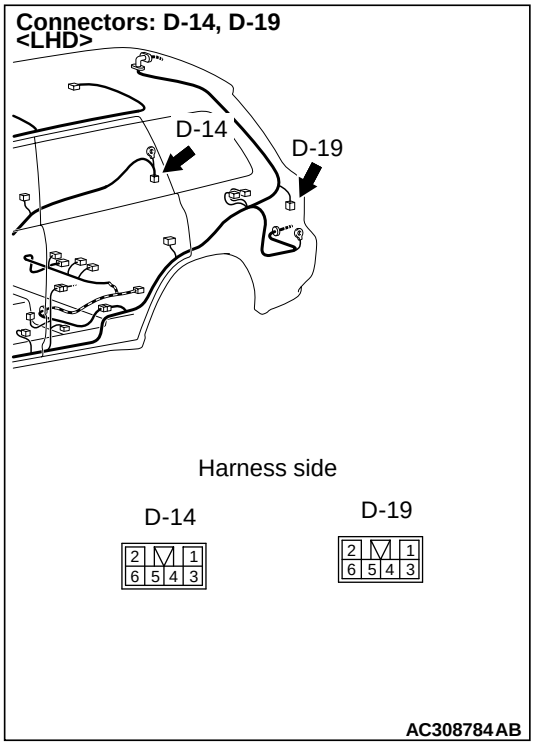

Connectors: D-14, D-19
<RHD>

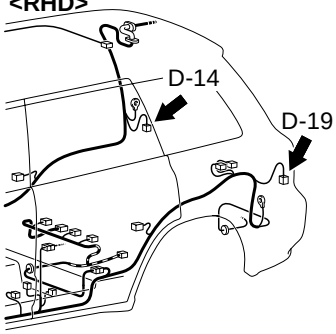

Harness side

D-14

D-19

AC308788 AC

NOTE:

Connectors: C-01, C-116, C-117
<LHD>

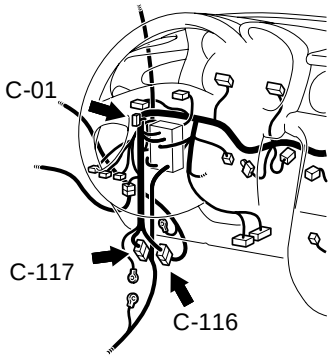

C-01

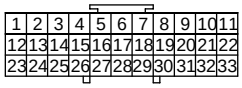

C-116

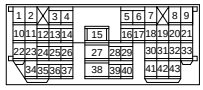

C-117

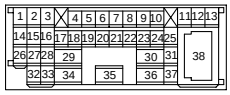

AC308717 AC

Connectors: F-08, F-10

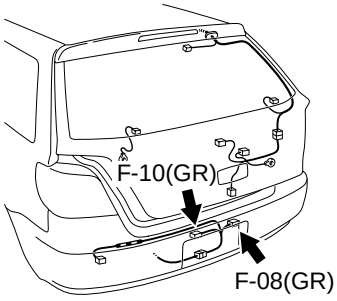

Harness side

F-08

F-10

AC308809 AD

Connectors: C-202, C-209
<LHD>

Junction block (Front view)

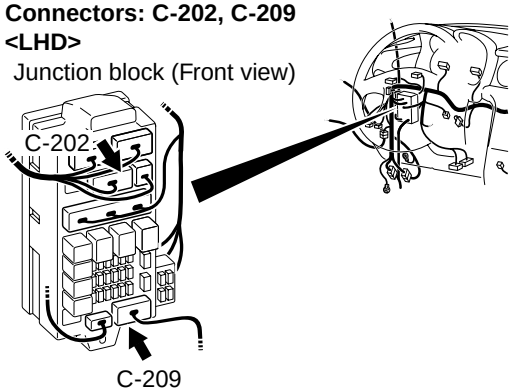

Harness side

C-202

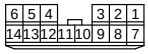

C-209

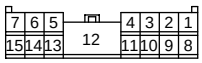

AC308721AE

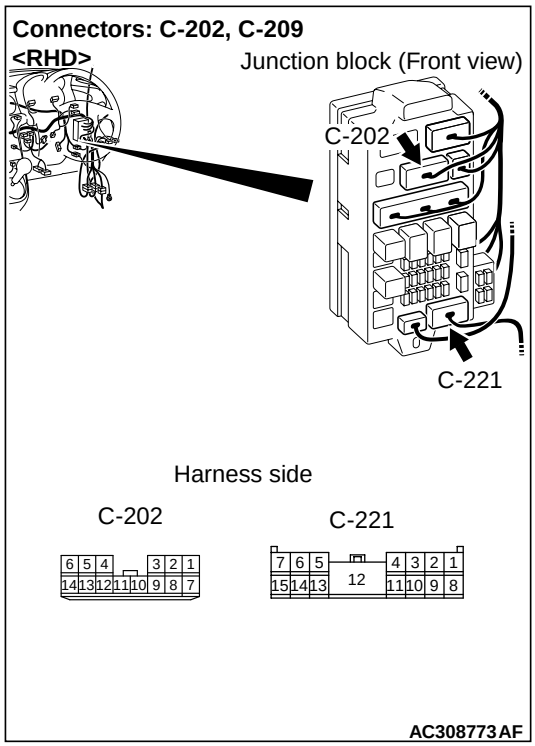

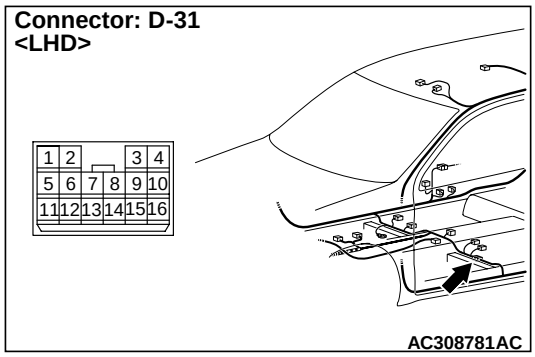

Prior to the wiring harness inspection, check joint connector C-01 <right tail lamp (L.H. drive vehicles)>, intermediate connector C-116 <tail lamp and licence plate lamp>, C-117 <left tail lamp and licence plate lamp>, D-31 <right tail lamp (L.H. drive vehicles)>, F-09 <licence plate lamp>, junction block connector C-202 <right tail lamp> and C-209 <right tail lamp (L.H. drive vehicles)> and C-221 <right tail lamp (R.H. drive vehicles)>, and repair if necessary.

- Check the output lines for open circuit.

Q: Is the check result normal?

YES : Go to Step 7.
NO : Repair the wiring harness.

Step 7. Retest the system.
Check that the tail lamps, the position lamps and the licence plate lamps illuminate normally.

Q: Is the check result normal?

The lamps illuminate normally at both high and low beams. : The trouble can be an intermittent malfunction (Refer to GROUP 00 – How to Cope with Intermittent Malfunction P.00-6).
When the tail lamps do not illuminate : Replace the rear combination lamp socket assembly.
When the position lamps do not illuminate : Replace the position lamp socket.
When the licence plate lamps do not illuminate : Replace the licence plate lamp socket.

INSPECTION PROCEDURE J-7: The headlamp(s) do not illuminate. <including high-beam indicator>

⚠ CAUTION

Whenever the ECU is replaced, ensure that the input and output signal circuits are normal.

Headlamps (High-Beam Indicator Lamp) Circuit <LHD>

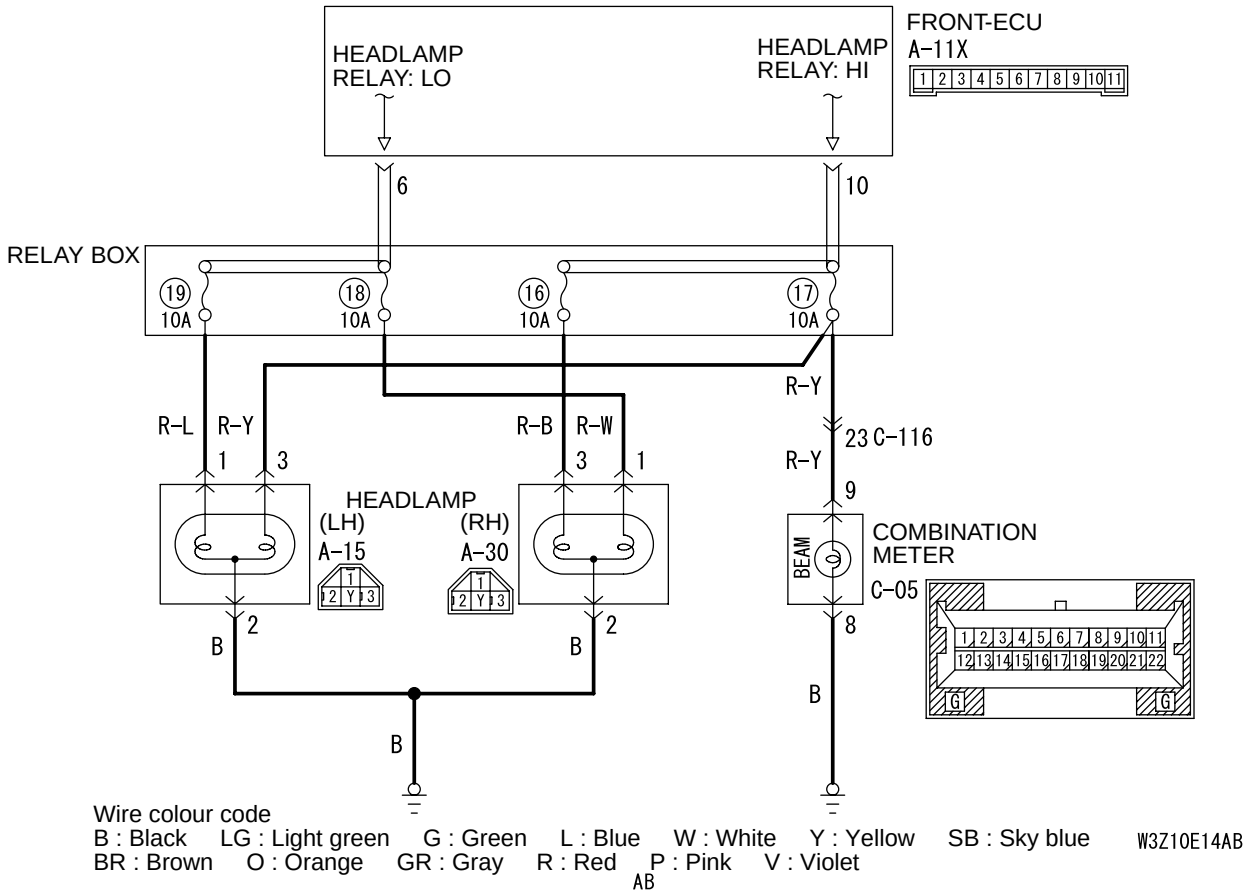

Headlamps Circuit <RHD>

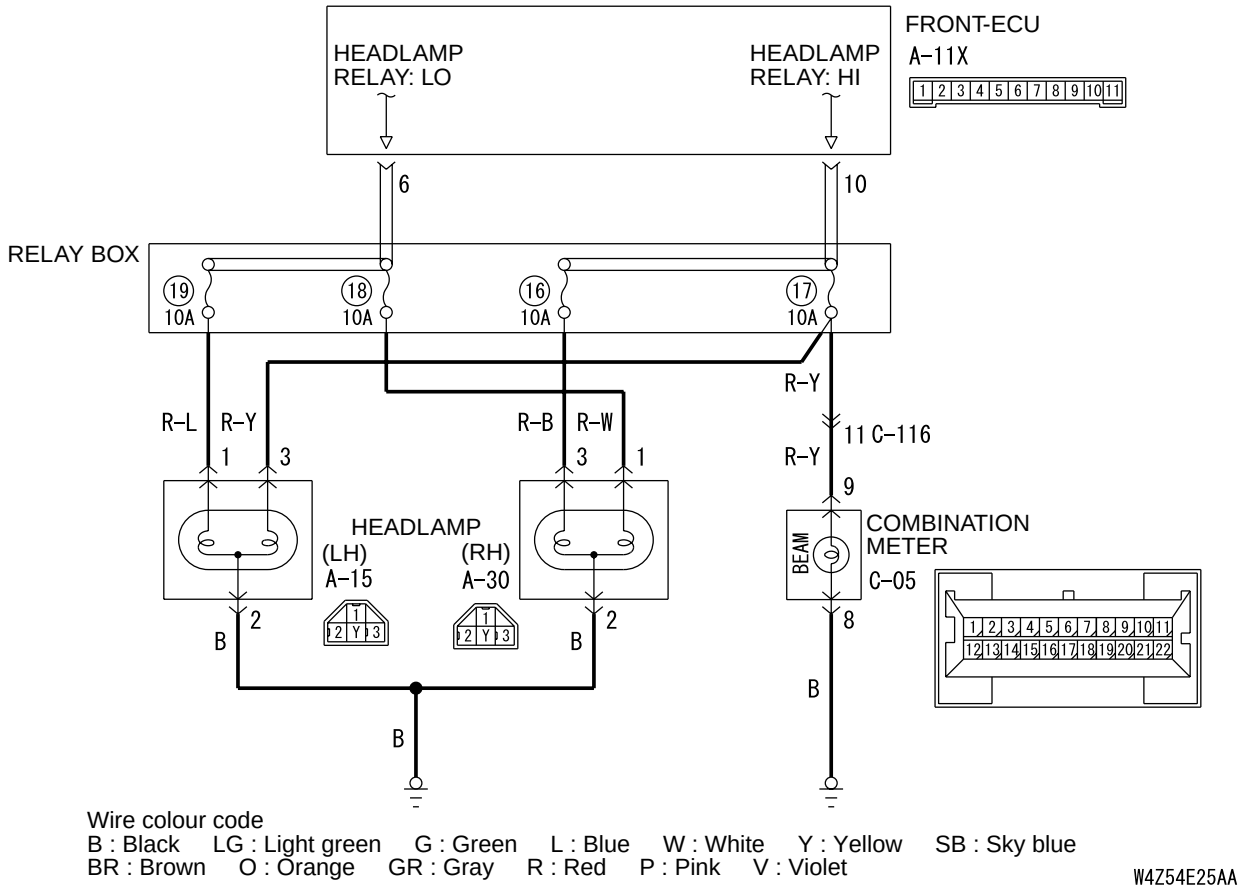

Wire colour code
B : Black LG : Light green G : Green L : Blue W : White Y : Yellow SB : Sky blue
BR : Brown O : Orange GR : Gray R : Red P : Pink V : Violet

W4Z54E25AA

COMMENTS ON TROUBLE SYMPTOM

If any of the headlamps or the high-beam indicator does not illuminate, the wiring harness connector(s), the bulb or the fuse may be defective or burned out.

POSSIBLE CAUSES

- Malfunction of the headlamp bulbs
- Malfunction of the high-beam indicator bulb
- Damaged harness wires and connectors

DIAGNOSTIC PROCEDURE

Step 1. Connector check: A-30 <headlamp RH>, A-15 <headlamp LH> headlamp assembly connector or C-05 <high-beam indicator> combination meter connector

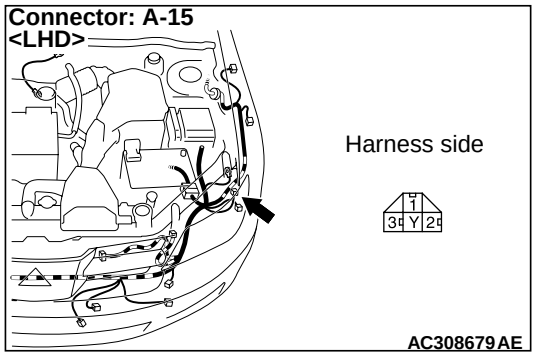

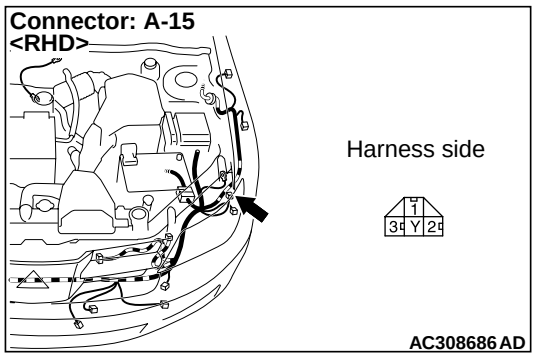

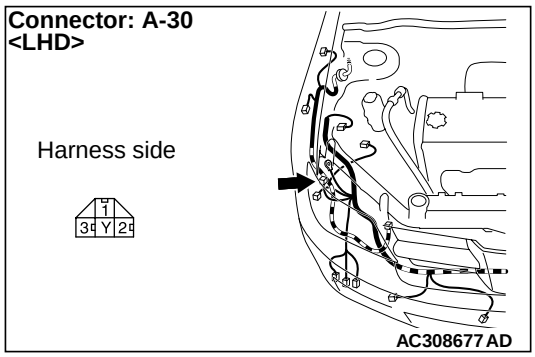

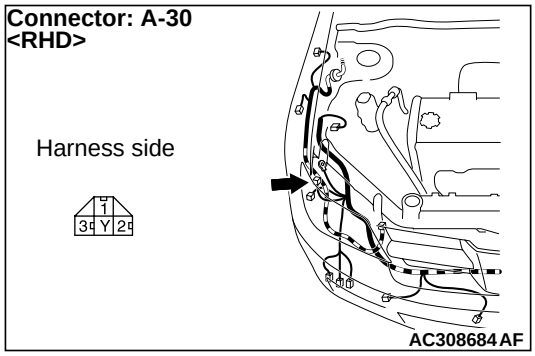

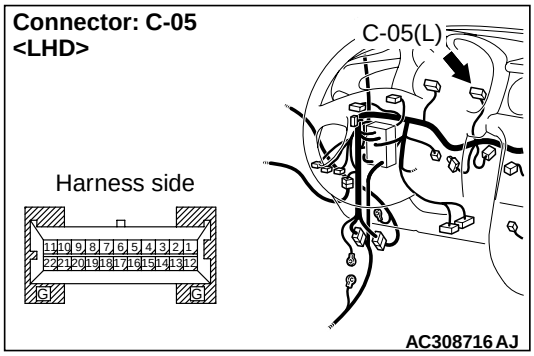

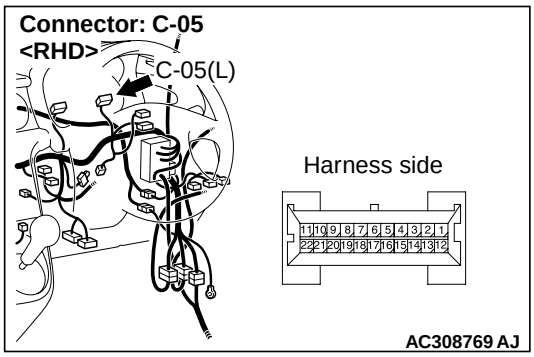

Q: Is the check result normal?
YES : Go to Step 2.
NO : Repair the defective connector.

Step 2. Check the bulb(s) of the headlamps or the high-beam indicator lamp.
Check the bulb(s) of the defective lamp.

Q: Is the check result normal?
YES : Go to Step 3.
NO : Replace the bulb(s) of the defective lamp.

Step 3. Measure the resistance at A-30 <headlamp RH>, A-15 <headlamp LH> headlamp assembly connector or C-05 <high-beam indicator> combination meter connector.

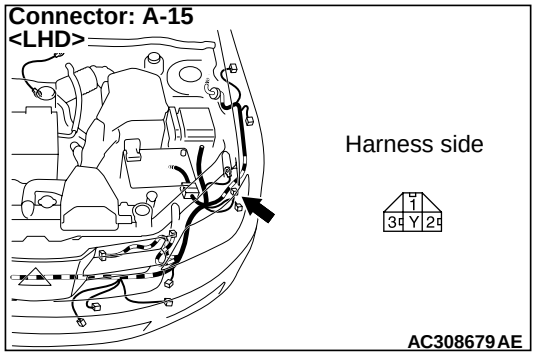

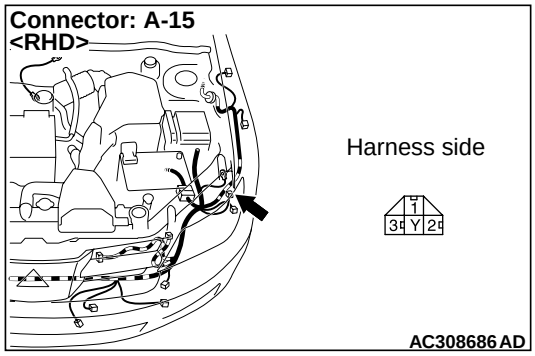

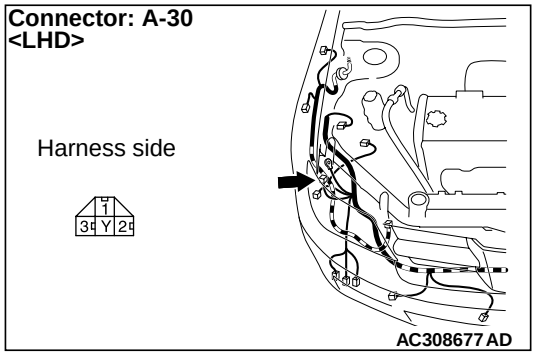

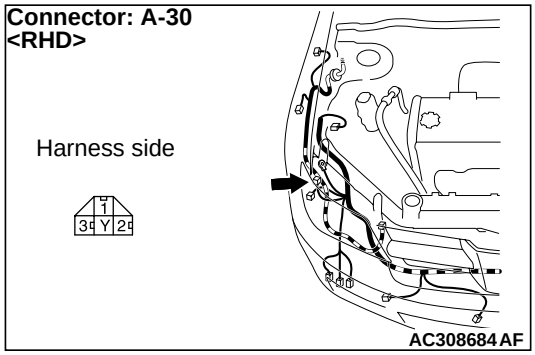

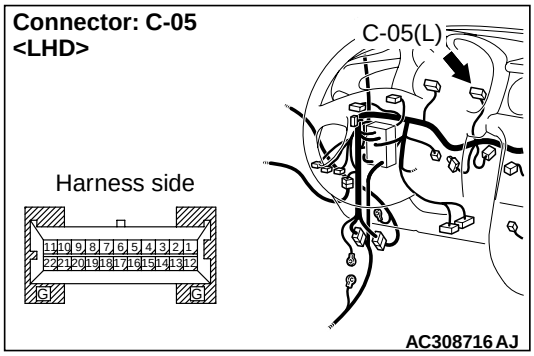

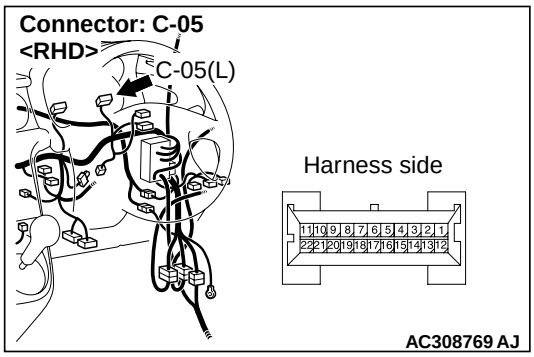

(1) Disconnect the connector, and measure at the wiring harness side.

(2) Check the resistance between the lamp connector and body earth.

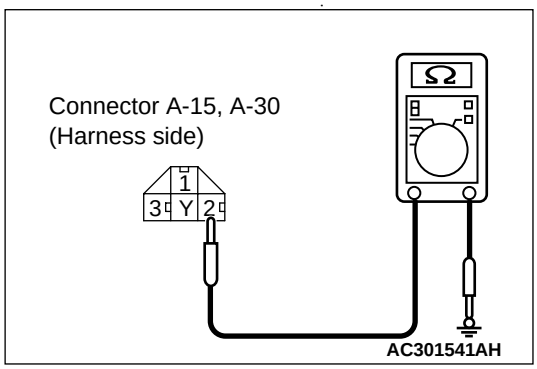

Resistance between A-30 <right headlamp> headlamp assembly connector terminal No.2 and body earth

- Resistance between A-15 <left headlamp> headlamp assembly connector terminal No.2 and body earth

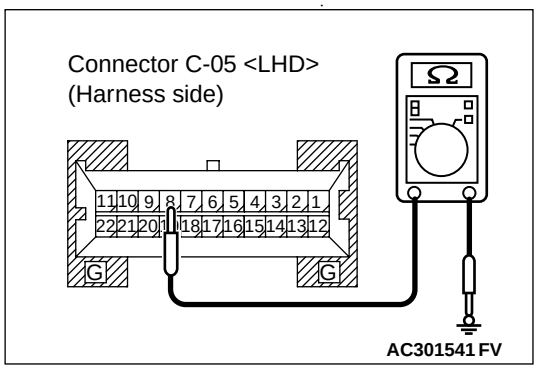

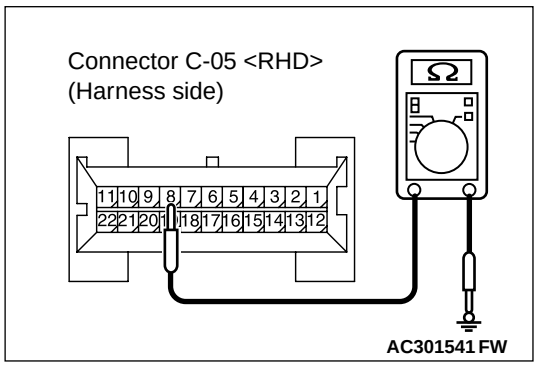

Resistance between C-05 <high-beam indicator lamp> combination meter connector terminal No.8 and body earth

OK: 2 Ω or less

Q: Is the check result normal?
YES : Go to Step 5.
NO : Go to Step 4.

Step 4. Check the wiring harness from A-30 <right headlamp> or A-15 <left headlamp> headlamp connector terminal No.2, or C-05 <high-beam indicator lamp> combination meter connector terminal No.8 to body earth.

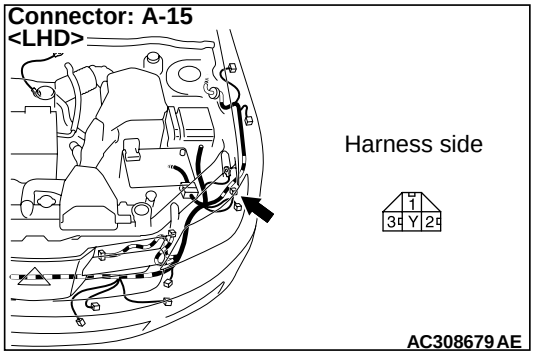

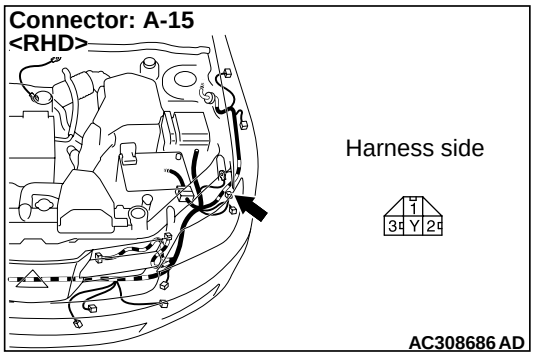

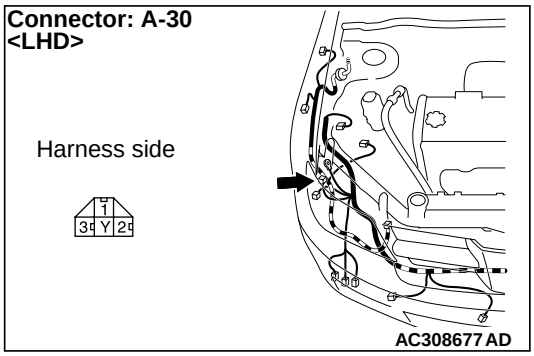

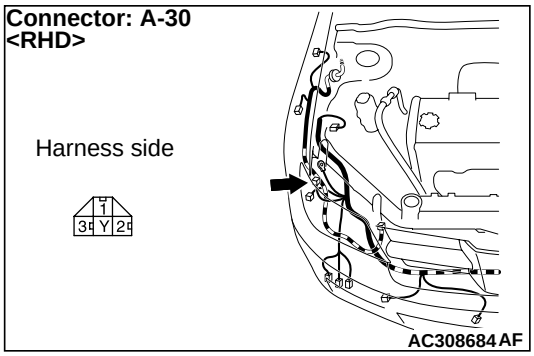

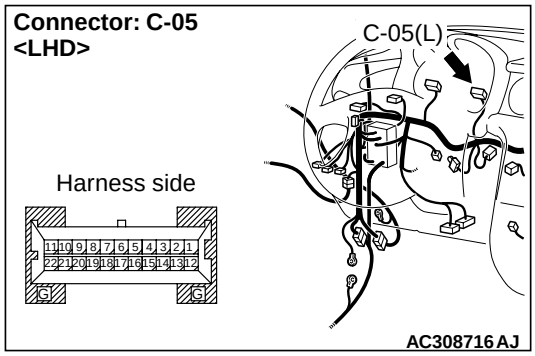

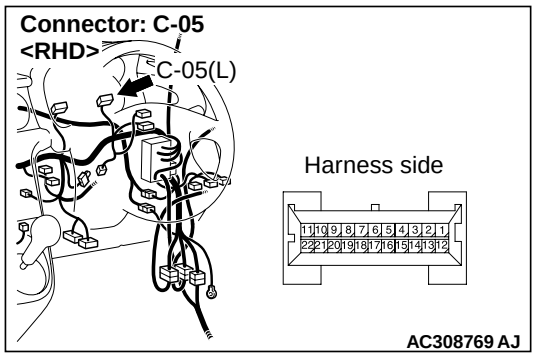

- Check the earth wires for open circuit.

Q: Is the check result normal?
YES : Go to Step 7.
NO : Repair the wiring harness.

Step 5. Connector check: A-11X front-ECU connector

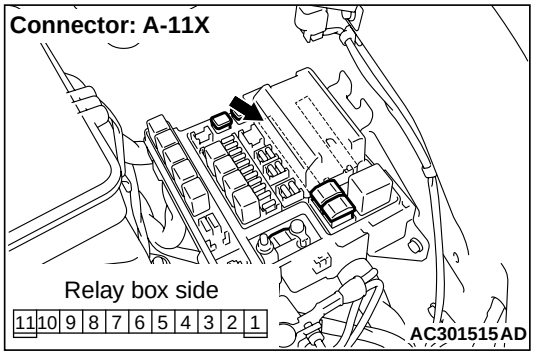

Q: Is the check result normal?
YES : Go to Step 6.
NO : Repair the defective connector.

Step 6. Check the wiring harness from A-30 <right headlamp>, A-15 <left headlamp> headlamp connector terminal No.1 <low-beam>, No.3 <high-beam>, C-05 combination meter connector terminal No.9 <high-beam indicator> to A-11X front-ECU connector terminal No.6 <low-beam> or No.10 <high-beam>.

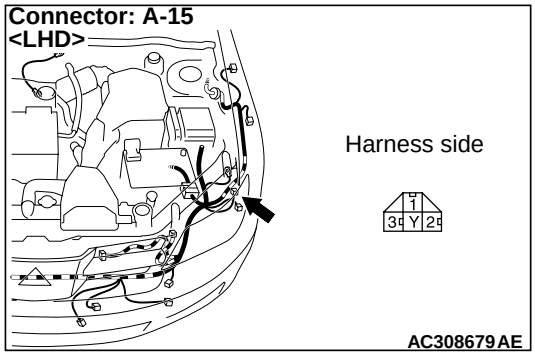

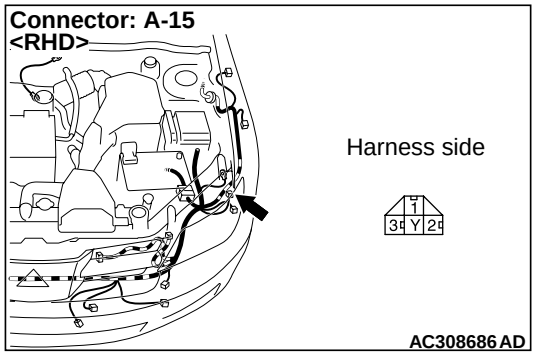

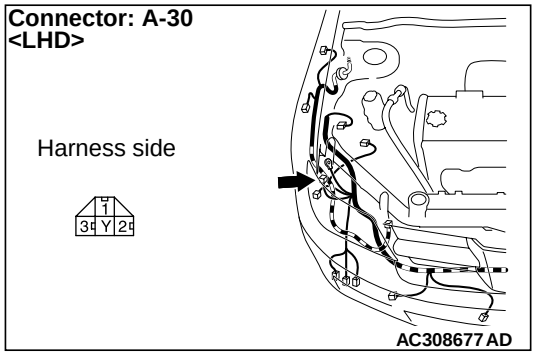

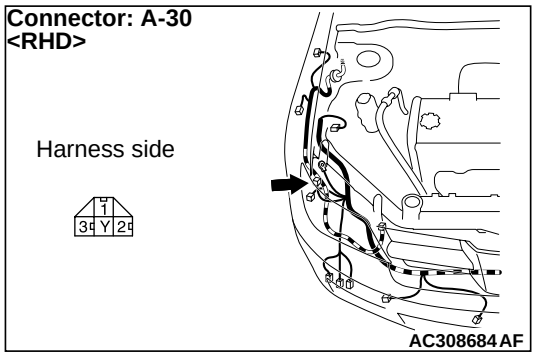

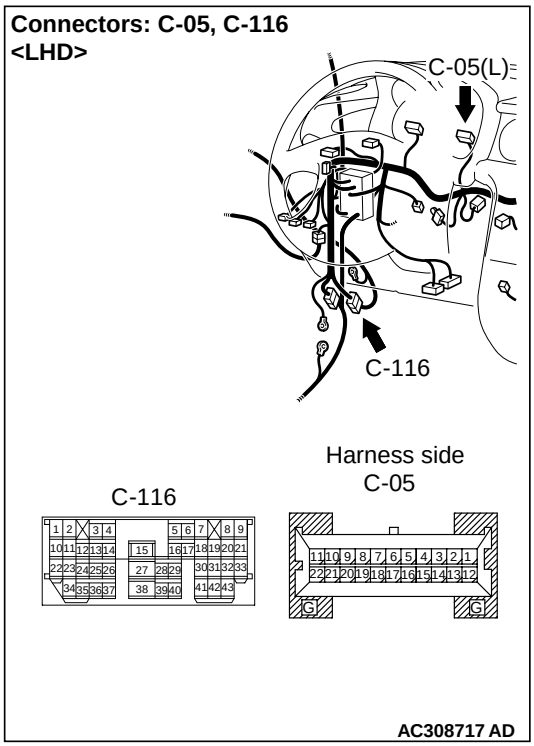

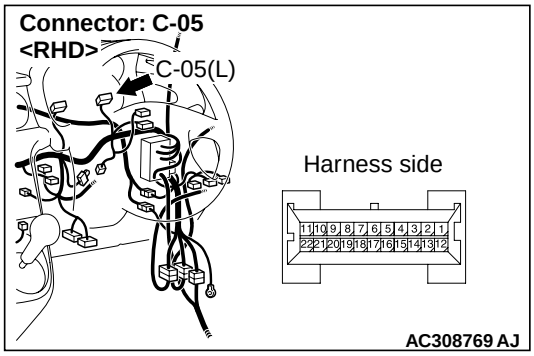

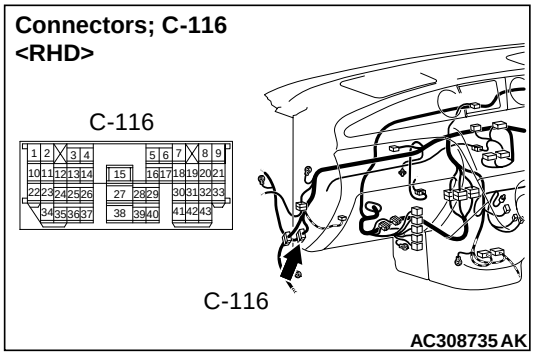

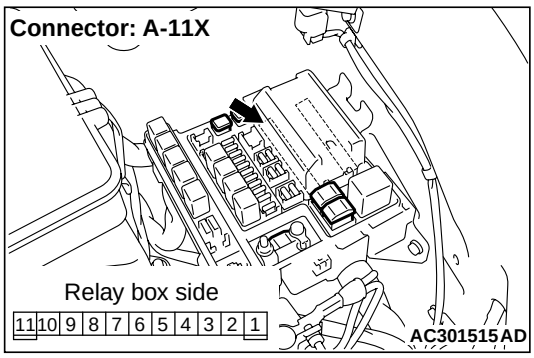

NOTE: Prior to the wiring harness inspection, check intermediate connector C-116 <high-beam indicator>, and repair if necessary.

- Check the output lines for open circuit.

Q: Is the check result normal?

YES : Go to Step 7.

NO : Repair the wiring harness.

Step 7. Retest the system.

Check that the headlamps and the high-beam indicator lamp illuminate/extinguish normally.

Q: Is the check result normal?

The lamps illuminate normally at both high and low beams. : The trouble can be an intermittent malfunction (Refer to GROUP 00 – How to Cope with Intermittent Malfunction P.00-6).

When the headlamps do not illuminate : Replace the headlamp socket.

When the high-beam indicator lamp does not illuminate : Replace the combination meter.

FLASHER TIMER

INSPECTION PROCEDURE K-1: The turn-signal lamps do not illuminate.

⚠ CAUTION

Whenever the ECU is replaced, ensure that the input and output signal circuits are normal.

Turn-Signal Lamp Power Supply Circuit <LHD>

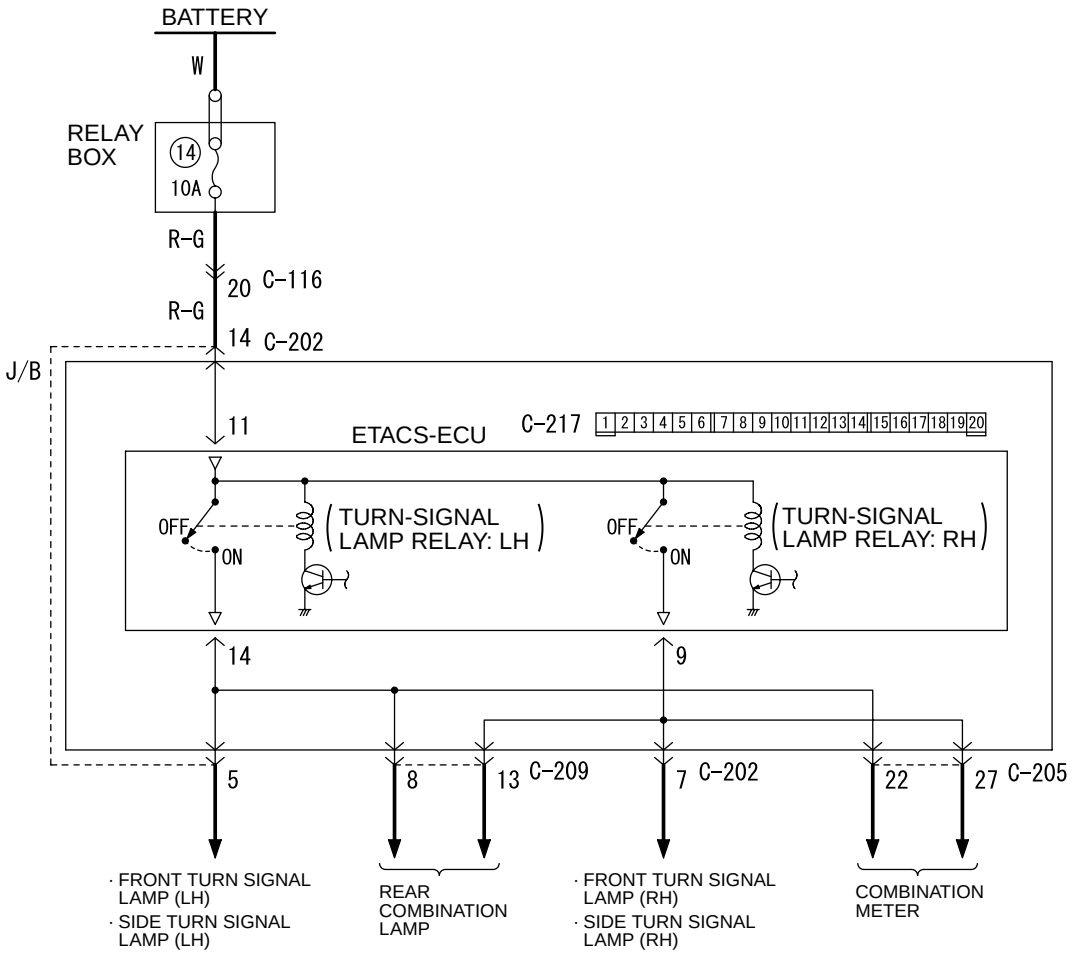

Wire colour code
B : Black LG : Light green G : Green L : Blue W : White Y : Yellow SB : Sky blue
BR : Brown O : Orange GR : Gray R : Red P : Pink V : Violet

W3Z10E15AB

Turn-Signal Lamp Power Supply Circuit <RHD>

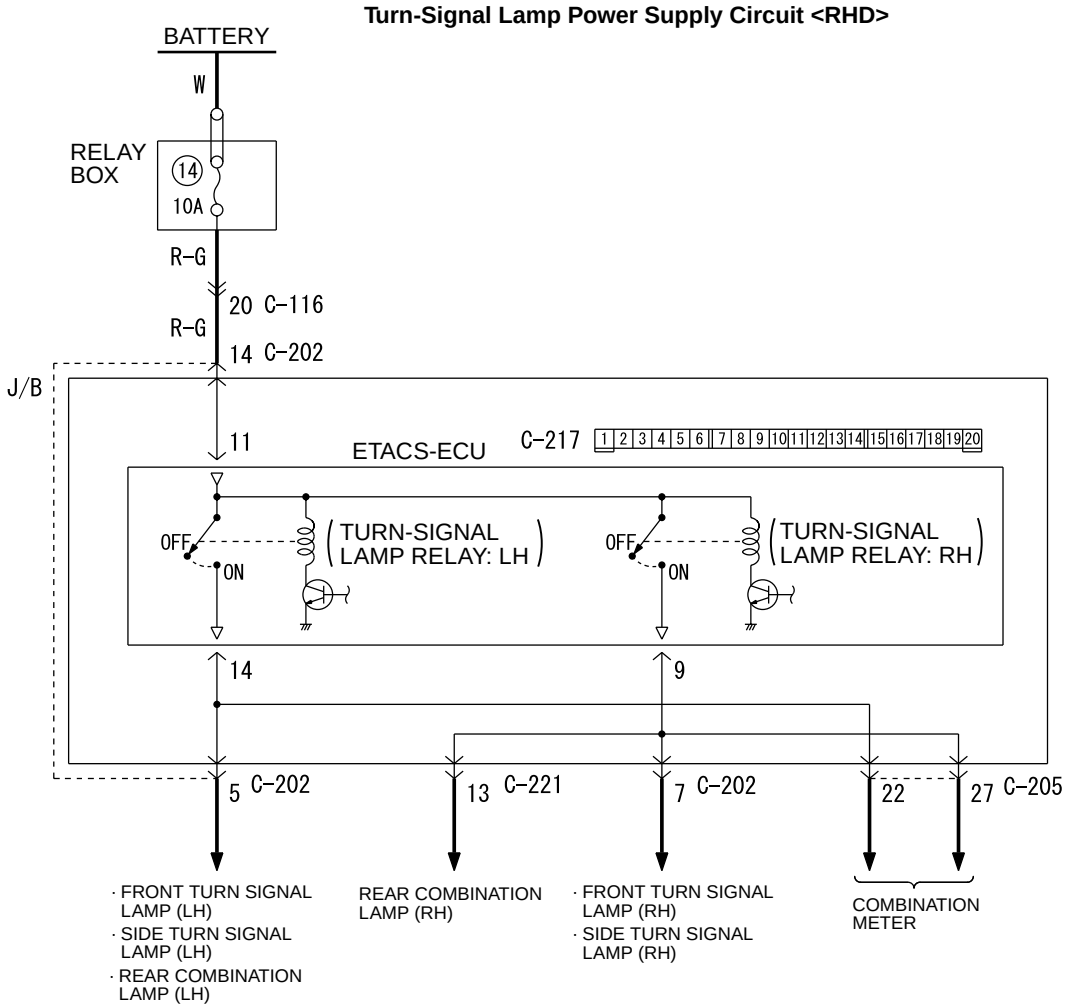

Wire colour code
B : Black LG : Light green G : Green L : Blue W : White Y : Yellow SB : Sky blue
BR : Brown O : Orange GR : Gray R : Red P : Pink V : Violet

W4Z54E26AA

COMMENTS ON TROUBLE SYMPTOM

If all the turn-signal lamps do not illuminate, the ignition switch (IG1), the turn-signal lamp switch input circuit or the ETACS-ECU may be defective.

POSSIBLE CAUSES

- Malfunction of the column switch
- Malfunction of the ETACS-ECU
- Damaged harness wires and connectors

DIAGNOSTIC PROCEDURE

Step 1. Check that the hazard warning lamps operate.

Check that the hazard warning lamps illuminate normally.

Q: Is the check result normal?

YES : Go to Step 6.

NO : Go to Step 2.

Step 2. Connector check: C-217 ETACS-ECU connector

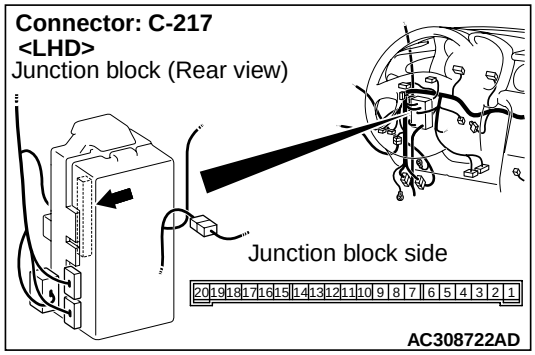

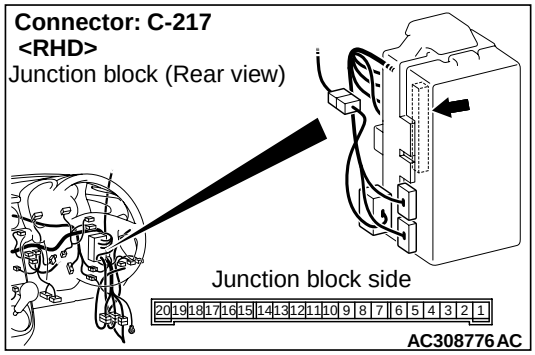

Q: Is the check result normal?
YES : Go to Step 3.
NO : Repair the defective connector.

Step 3. Measure the voltage at the C-217 ETACS-ECU connector.

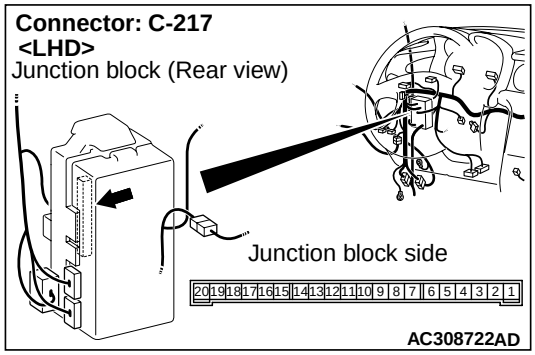

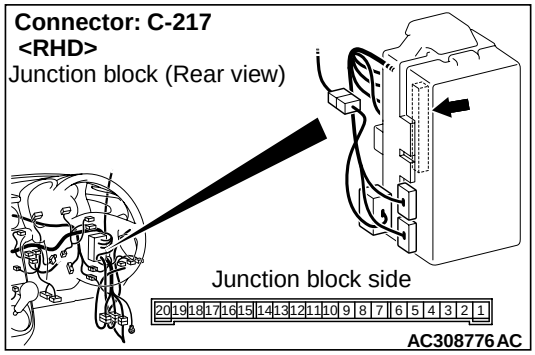

(1) Remove the ETACS-ECU, and measure at the junction block side.

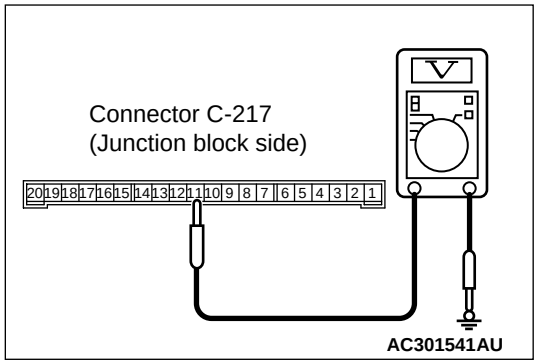

(2) Voltage between C-217 ETACS-ECU connector terminal No.11 and body earth

OK: System voltage

Q: Is the check result normal?
YES : Go to Step 5.
NO : Go to Step 4.

Step 4. Check the wiring harness between C-217 ETACS-ECU connector terminal No.11 and the battery.

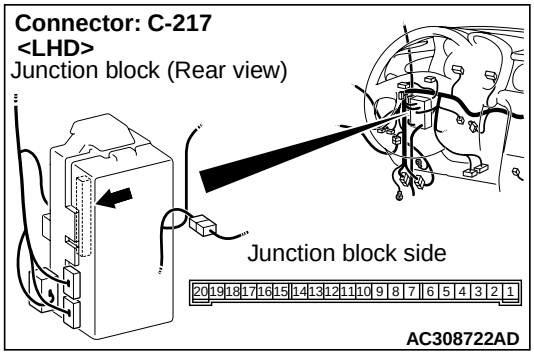

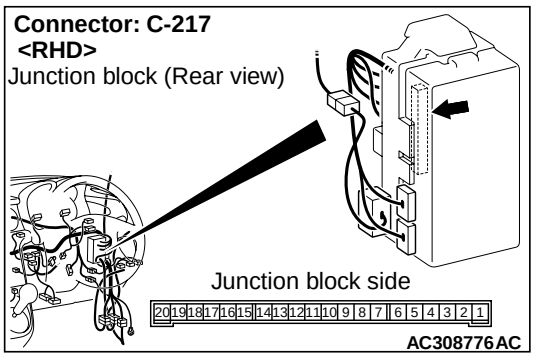

NOTE:

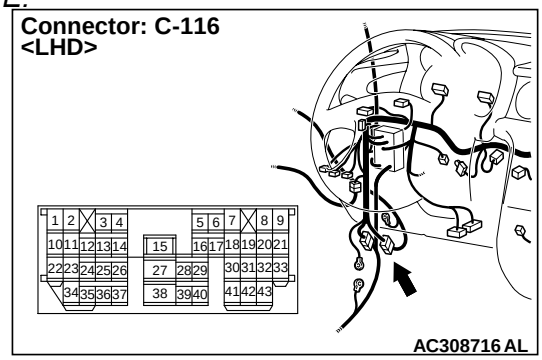

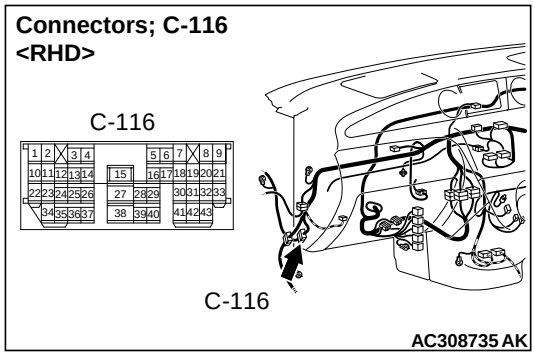

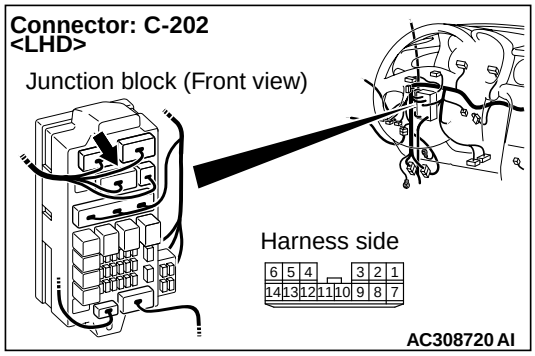

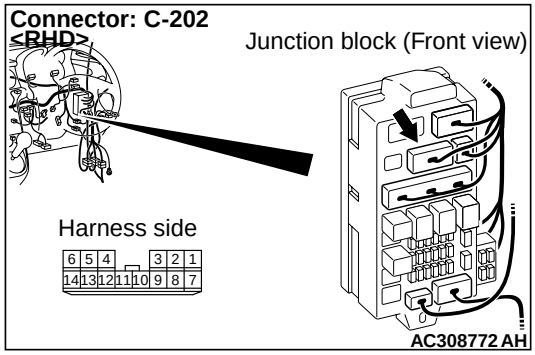

Prior to the wiring harness inspection, check intermediate connector C-116 and junction block connector C-202, and repair if necessary.

- Check the power supply line for open circuit.

Q: Is the check result normal?

YES : The trouble can be an intermittent malfunction (Refer to GROUP 00 – How to Cope with Intermittent Malfunction P.00-6).

NO : Repair the wiring harness.

Step 5. Retest the system.

Check that the turn-signal lamps illuminate normally.

Q: Is the check result normal?

YES : The trouble can be an intermittent malfunction (Refer to GROUP 00 – How to Cope with Intermittent Malfunction P.00-6).

NO : Replace the ETACS-ECU.

Step 6. Pulse check

Check the input signals below, which are related to the turn-signal lamp illumination.

System switch	Check condition
Turn-signal lamp switch (RH)	When the turn-signal lamp switch (RH) is turned from off to on
Turn-signal lamp switch (LH)	When the turn-signal lamp switch (LH) is turned from off to on

OK: The MUT-II/III sounds or the voltmeter needle fluctuates.

Q: Is the check result normal?

All the signals are received normally. : Go to Step 7.

The turn-signal lamp switch (RH) signal is not received. : Refer to inspection procedure N-5 "The column switch (lighting and turn-signal lamp switch) signal is not received P.54B-319."

The turn-signal lamp switch (LH) signal is not received. : Refer to inspection procedure N-5 "The column switch (lighting and turn-signal lamp switch) signal is not received P.54B-319."

Step 7. Retest the system.

Check that the turn-signal lamps illuminate.

Q: Is the check result normal?

YES : The trouble can be an intermittent malfunction (Refer to GROUP 00 – How to Cope with Intermittent Malfunction P.00-6).

NO : Replace the ETACS-ECU.

INSPECTION PROCEDURE K-2: The hazard warning lamps do not illuminate.

⚠ CAUTION

Whenever the ECU is replaced, ensure that the input and output signal circuits are normal.

Hazard Warning Lamp Circuit

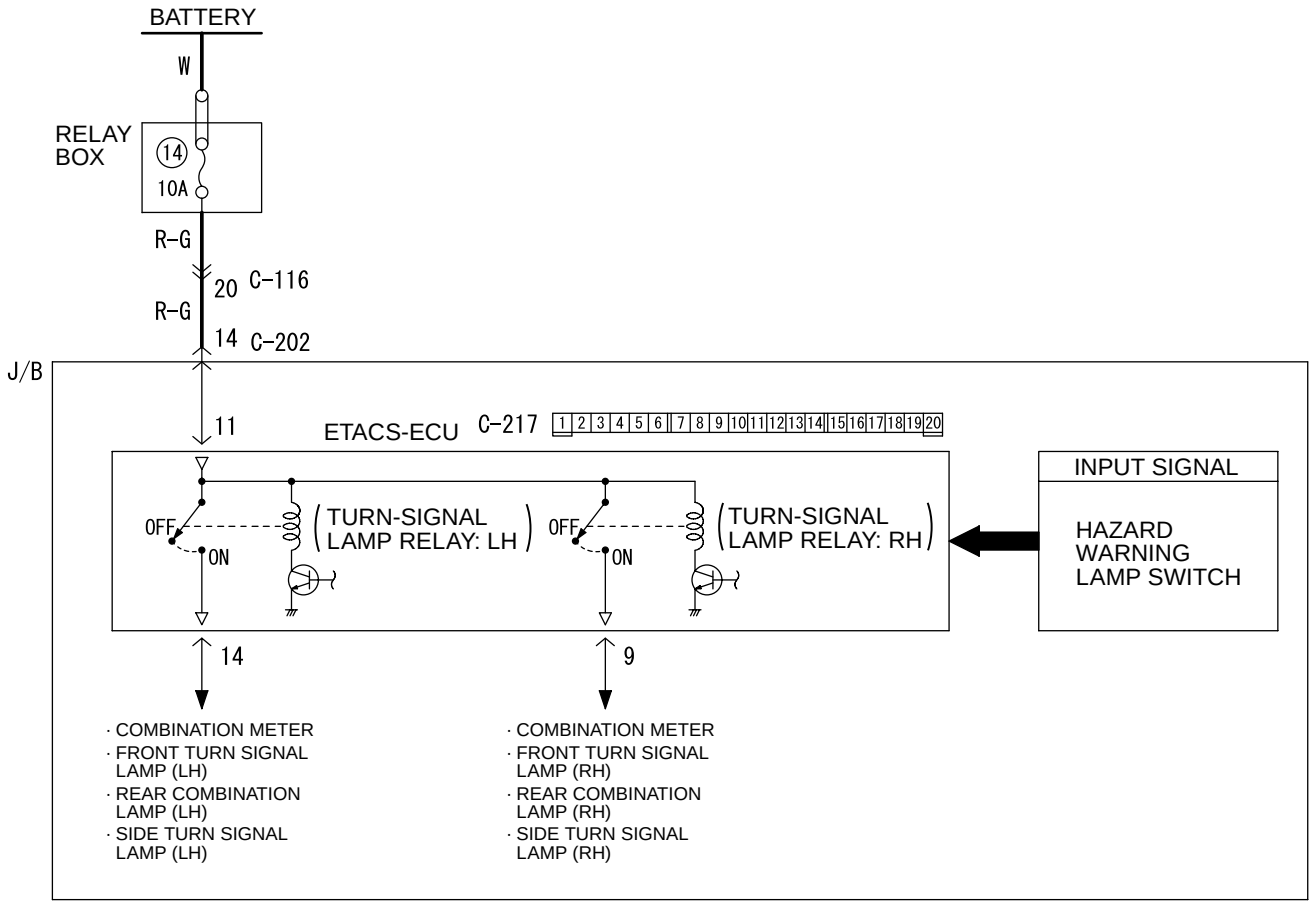

Wire colour code
B : Black LG : Light green G : Green L : Blue W : White Y : Yellow SB : Sky blue
BR : Brown O : Orange GR : Gray R : Red P : Pink V : Violet

W3Z10E16AA

COMMENTS ON TROUBLE SYMPTOM

If the hazard warning lamps do not illuminate, the hazard warning lamp input signal circuit or the ETACS-ECU may be defective.

POSSIBLE CAUSES

- Malfunction of the hazard warning lamp switch
- Malfunction of the ETACS-ECU
- Damaged harness wires and connectors

DIAGNOSTIC PROCEDURE

Step 1. Check that the turn-signal lamps operate.
Check that the turn-signal lamps illuminate normally.

Q: Is the check result normal?
YES : Go to Step 2.
NO : Refer to inspection procedure K-1 "The turn signal lamps do not illuminate P.54B-236."

Step 2. Check the power supply circuit.
When the ignition switch is at the LOCK (OFF) position, check that the functions below work normally.

- Lamp reminder function
- Central door locking system
- Dome lamp (excluding interior lamp automatic-shutdown function)

Q: Is the check result normal?
YES : Go to Step 3.
NO : Refer to inspection procedure A-2 "Check the ETACS-ECU battery power supply circuit P.54B-52."

Step 3. Pulse check
Check the input signal from the hazard warning lamp switch.

System switch	Check condition
Hazard warning lamp switch	When the hazard warning lamp switch is turned from off to on

OK: The MUT-II/III sounds or the voltmeter needle fluctuates.

Q: Is the check result normal?
The signal is received normally. : Go to Step 4.
The hazard warning lamp switch signal is not received. : Refer to inspection procedure N-10 "The hazard warning lamp switch signal is not received P.54B-338."

Step 4. Retest the system.
Check that the hazard warning lamps illuminate.

Q: Is the check result normal?
YES : The trouble can be an intermittent malfunction (Refer to GROUP 00 – How to Cope with Intermittent Malfunction P.00-6).
NO : Replace the ETACS-ECU.

INSPECTION PROCEDURE K-3: Any of the turn-signal lamps does not illuminate.

⚠ CAUTION

Whenever the ECU is replaced, ensure that the input and output signal circuits are normal.

Turn-Signal Lamps Circuit <LHD>

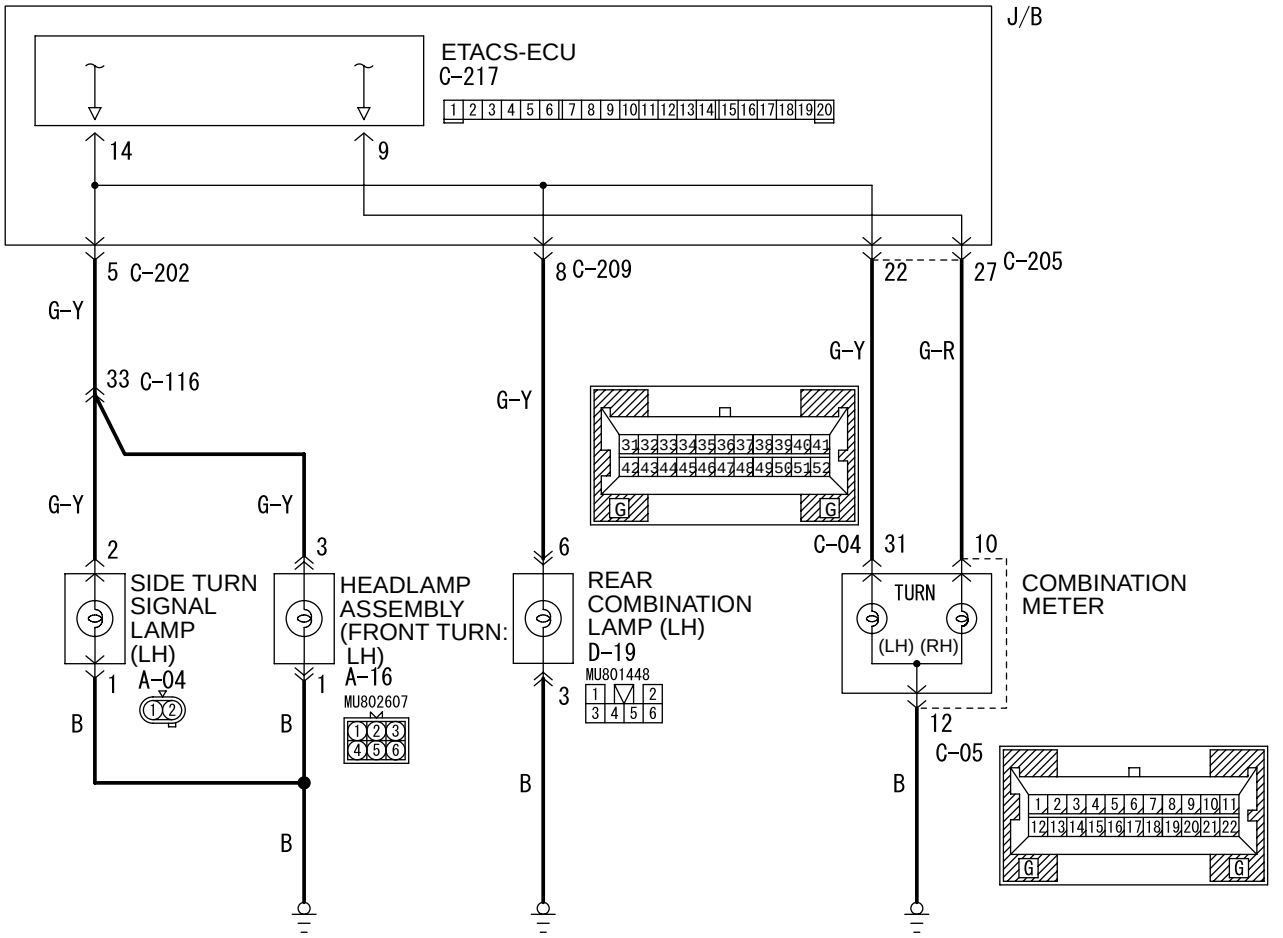

Wire colour code
B : Black LG : Light green G : Green L : Blue W : White Y : Yellow SB : Sky blue
BR : Brown O : Orange GR : Gray R : Red P : Pink V : Violet

W3Z10E17AB

Turn-Signal Lamps Circuit <RHD>

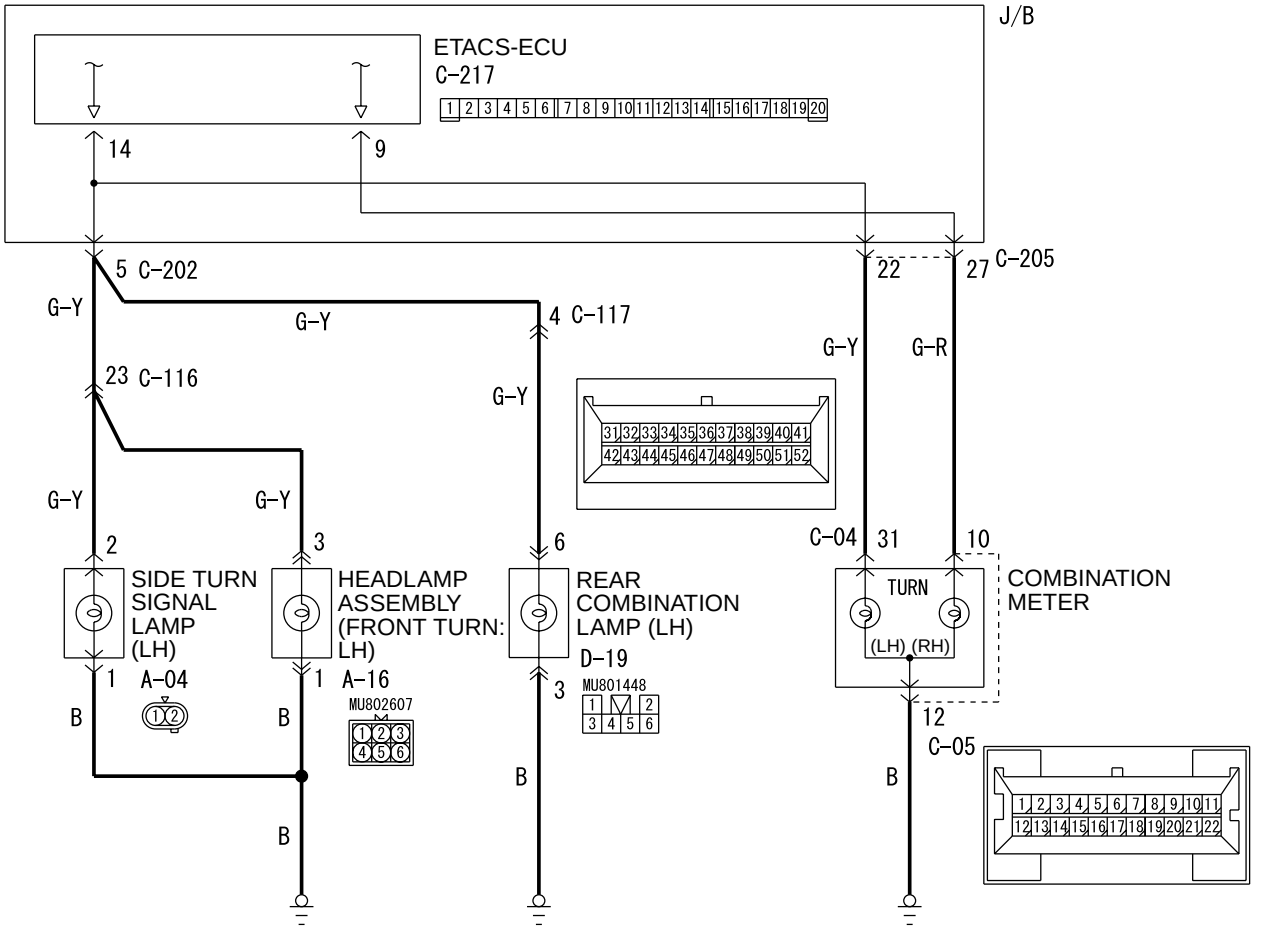

Wire colour code
B : Black LG : Light green G : Green L : Blue W : White Y : Yellow SB : Sky blue
BR : Brown O : Orange GR : Gray R : Red P : Pink V : Violet

W4Z54E28AA

Turn-Signal Lamps Circuit <LHD>

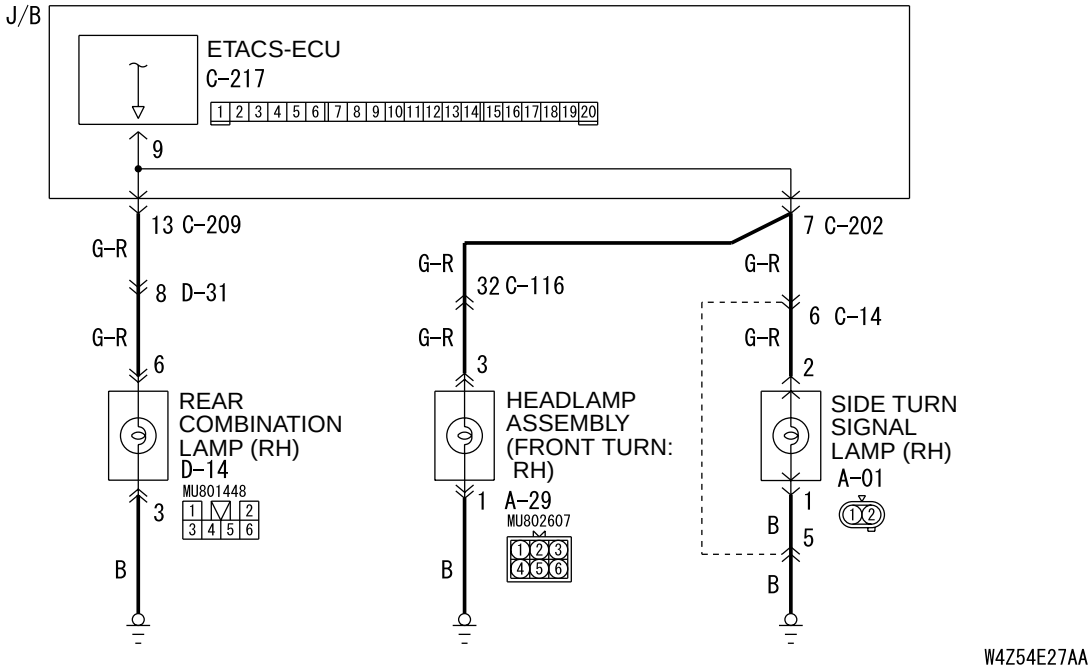

Turn-Signal Lamps Circuit <RHD>

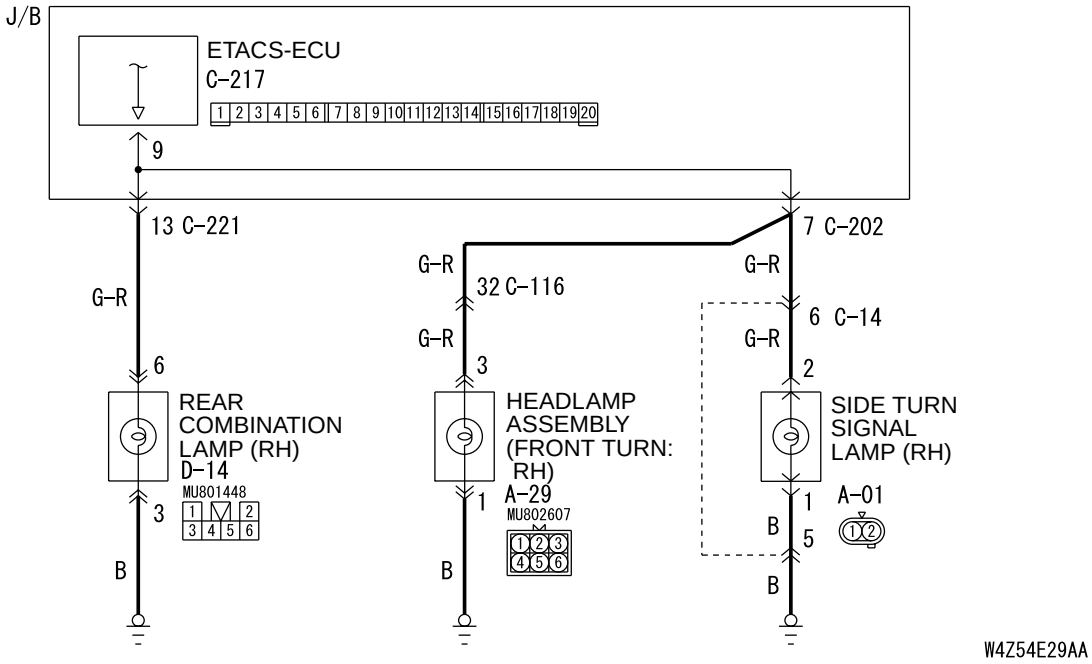

COMMENTS ON TROUBLE SYMPTOM

If any of the turn-signal lamp does not illuminate normally, wiring harness connector(s) or the bulb may be defective.

POSSIBLE CAUSES

- Defective turn-signal lamp bulb
- Damaged harness wires and connectors

DIAGNOSTIC PROCEDURE

Step 1. Connector check: A-29 <front RH> or A-16 <front LH> front turn-signal lamp connector, A-01 <side RH> or A-04 <side LH> side turn-signal lamp connector, D-14 <rear RH> or D-19 <rear LH> rear combination lamp connector, C-05 <turn-signal indicator lamp> and C-04 <turn-signal indicator lamp (LH)> combination meter connector

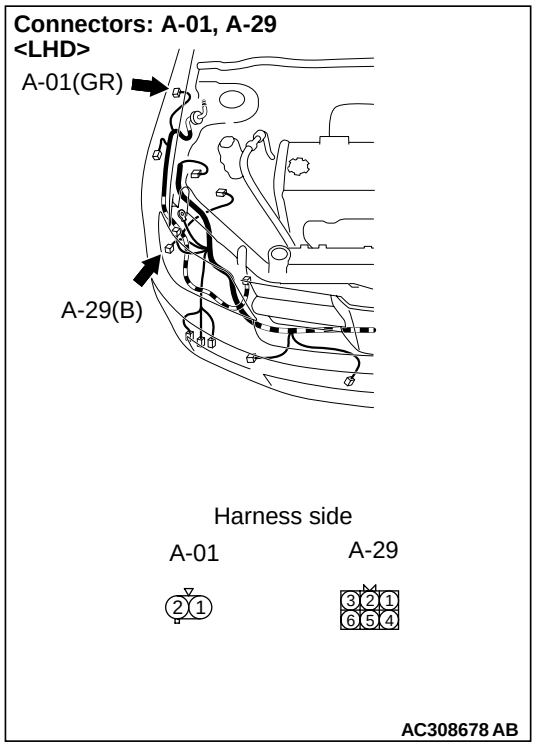

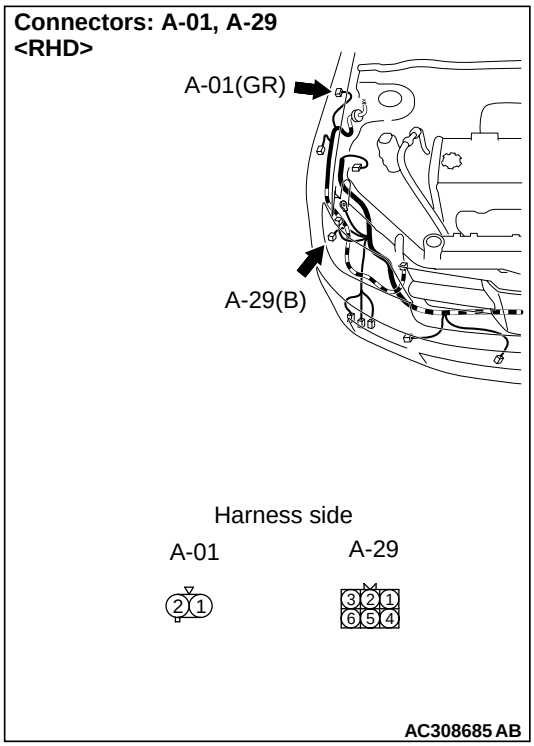

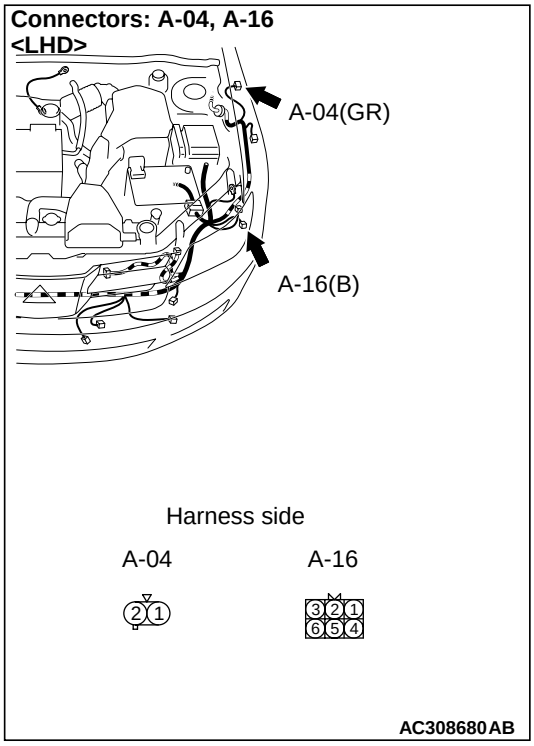

Connectors: A-04, A-16
<RHD>

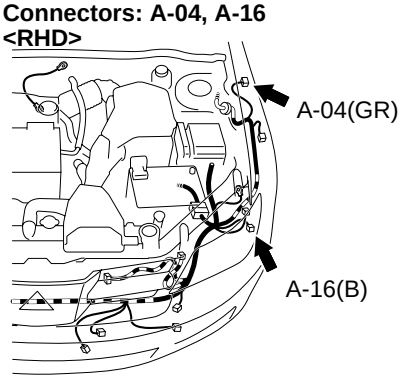

Harness side

A-04

A-16

AC308687AB

Connectors: C-04, C-05
<RHD>

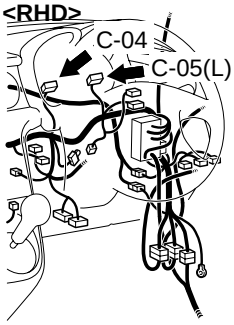

Harness side

C-04

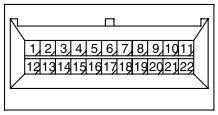

C-05

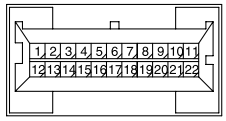

AC308770AC

Connectors: C-04, C-05
<LHD>

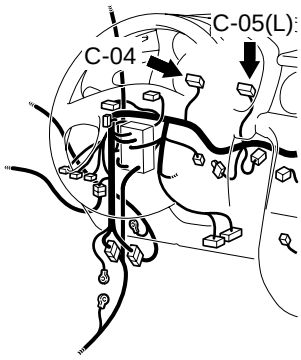

Harness side

C-04

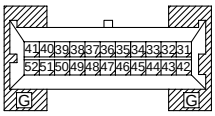

C-05

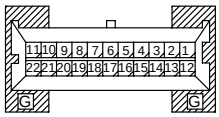

AC308717AE

Connectors: D-14, D-19
<LHD>

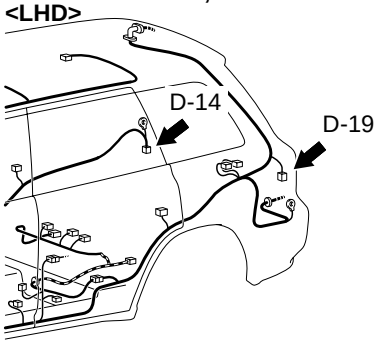

Harness side

D-14

D-19

AC308784AD

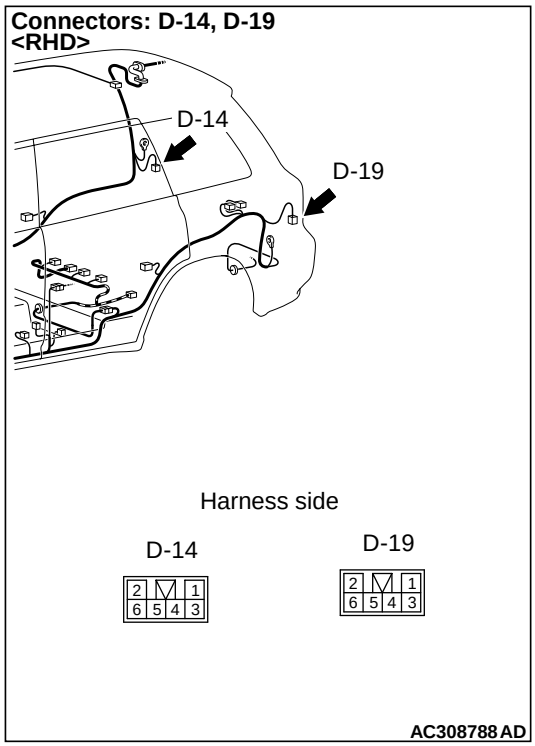

Q: Is the check result normal?
YES : Go to Step 2.
NO : Repair the defective connector.

Step 2. Check the bulb(s) of the turn-signal lamps or the turn-signal indicator lamps.
Check the bulb(s) of the defective lamp.

Q: Is the check result normal?
YES : Go to Step 3.
NO : Replace the bulb(s) of the defective lamp.

Step 3. Measure the resistance at the A-29 <front RH> or A-16 <front LH> front turn-signal lamp connector, the A-01 <side RH> or A-04 <side LH> side turn-signal lamp connector, the D-14 <rear RH> or D-19 <rear LH> rear combination lamp connector, the C-05 <turn-signal indicator lamp> and C-04 <turn-signal indicator lamp (LH)> combination meter connector.

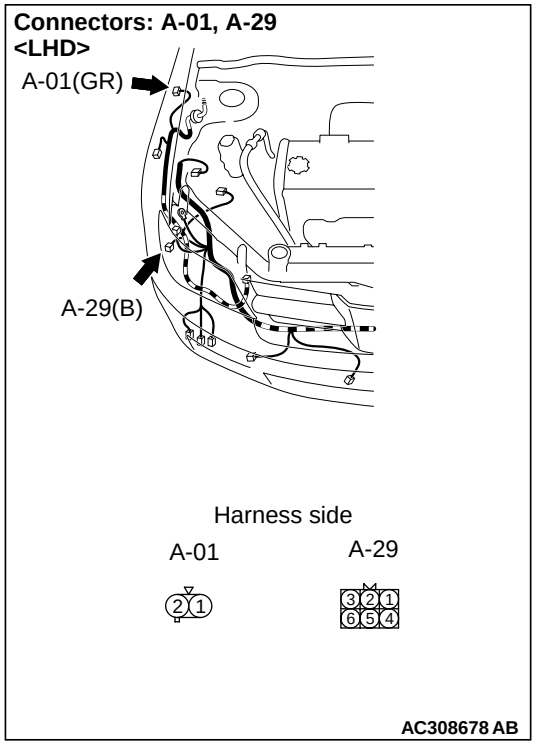

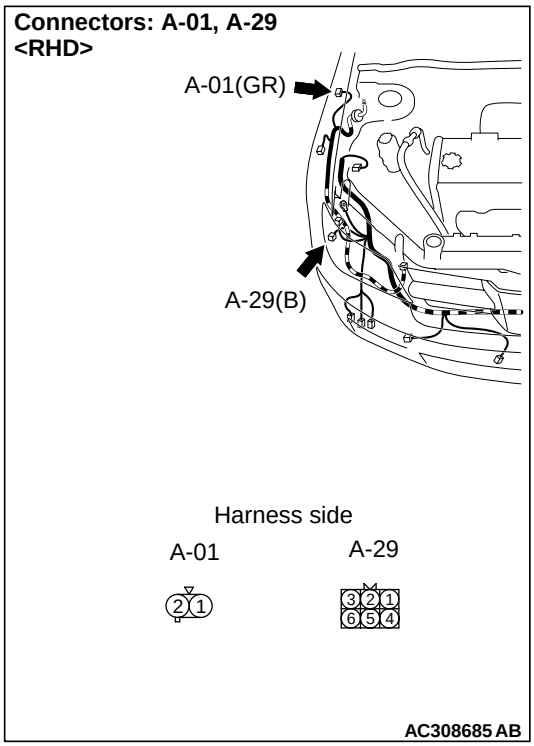

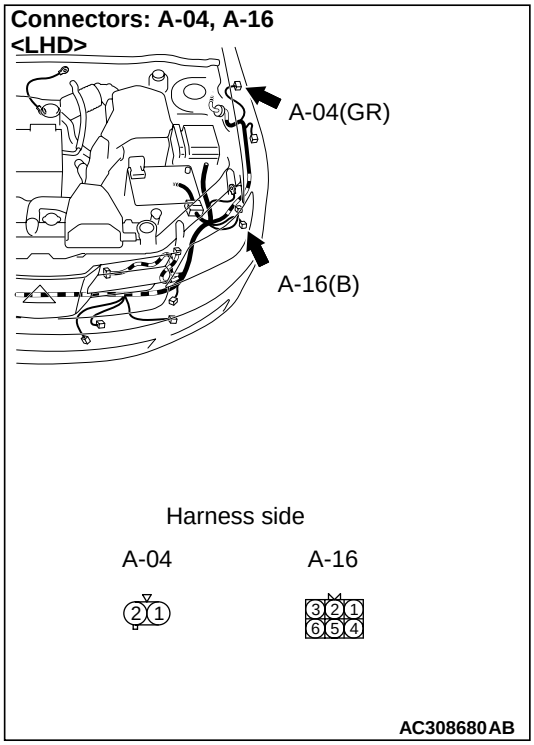

Connectors: A-04, A-16
<RHD>

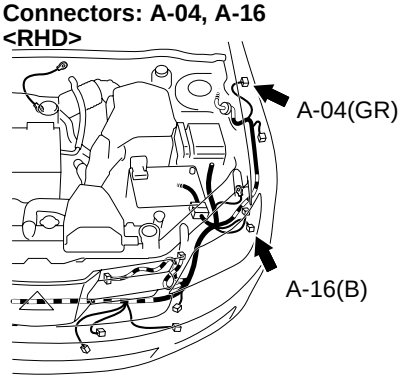

Harness side

A-04

A-16

AC308687 AB

Connectors: C-04, C-05
<RHD>

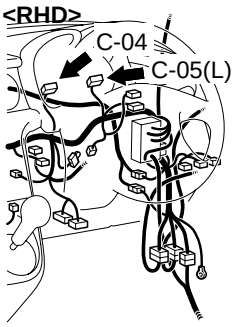

Harness side

C-04

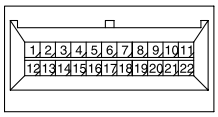

C-05

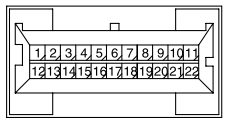

AC308770 AC

Connectors: C-04, C-05
<LHD>

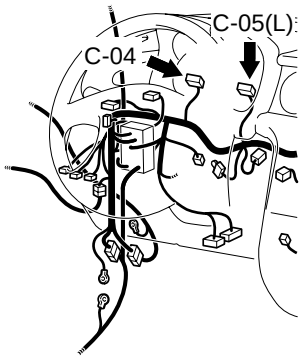

Harness side

C-04

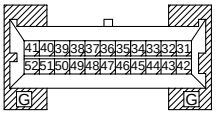

C-05

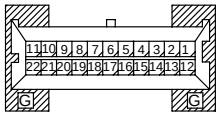

AC308717 AE

Connectors: D-14, D-19
<LHD>

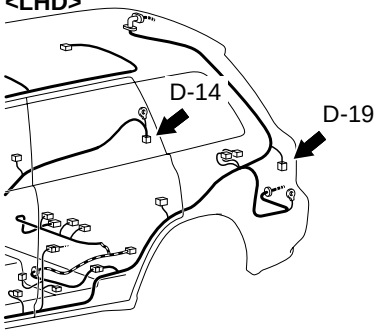

Harness side

D-14

D-19

AC308784 AD

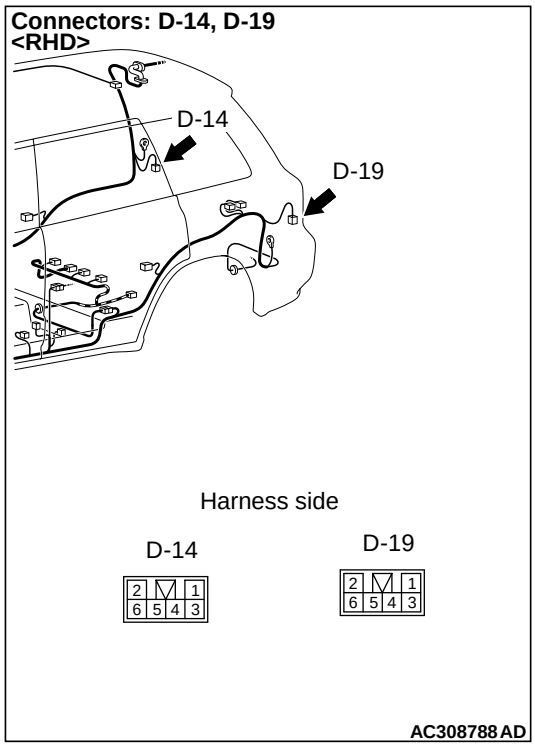

(1) Disconnect the connector, and measure at the wiring harness side.
(2) Measure the resistance between the defective lamp connector terminal and body earth.

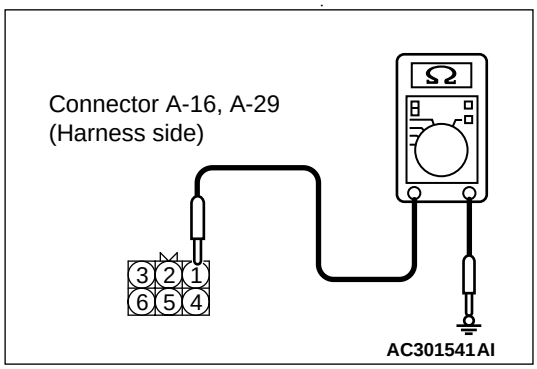

Resistance between A-29 <front RH> headlamp assembly connector terminal No.1 and body earth
- Resistance between A-16 <front LH> headlamp assembly connector terminal No.1 and body earth

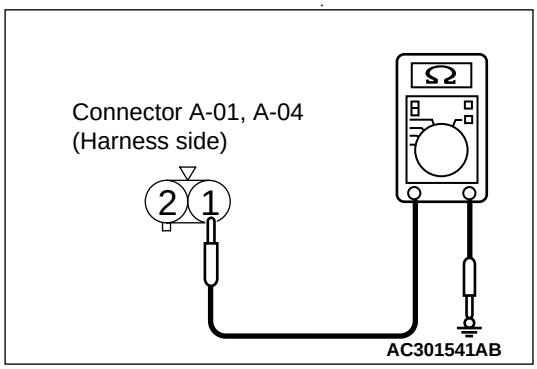

Resistance between A-01 <side RH> side turn-signal lamp connector terminal No.1 and body earth
- Resistance between A-04 <side LH> side turn-signal lamp connector terminal No.1 and body earth

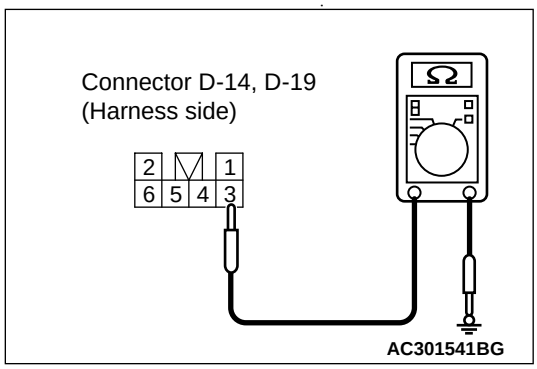

Resistance between D-14 <rear RH> rear combination lamp connector terminal No.3 and body earth
- Resistance between D-19 <rear LH> rear combination lamp connector terminal No.3 and body earth

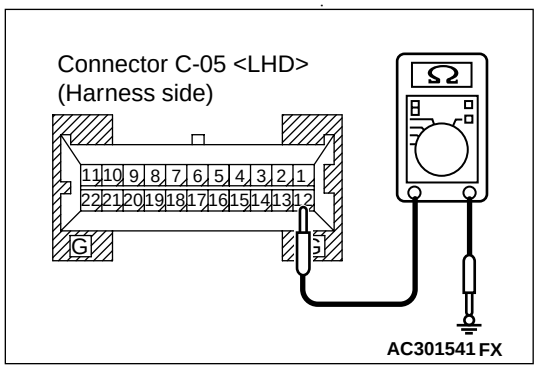

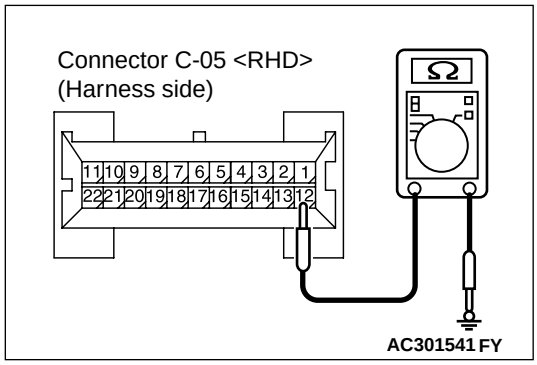

Resistance between C-05 <turn-signal indicator lamp> combination meter terminal No.12 and body earth

OK: 2 Ω or less

Q: Is the check result normal?
YES : . Go to Step 5.
NO : . Go to Step 4.

Step 4. Check the wiring harness from A-29 <front RH> or A-16 <front LH> front turn-signal lamp connector terminal No.1, A-01 <side RH> or A-04 <side LH> side turn-signal lamp connector terminal No.1, D-14 <rear RH> or D-19 <rear LH> rear combination lamp connector terminal No.3, or C-05 <turn-signal indicator lamp> combination meter connector terminal No.12 to body earth.

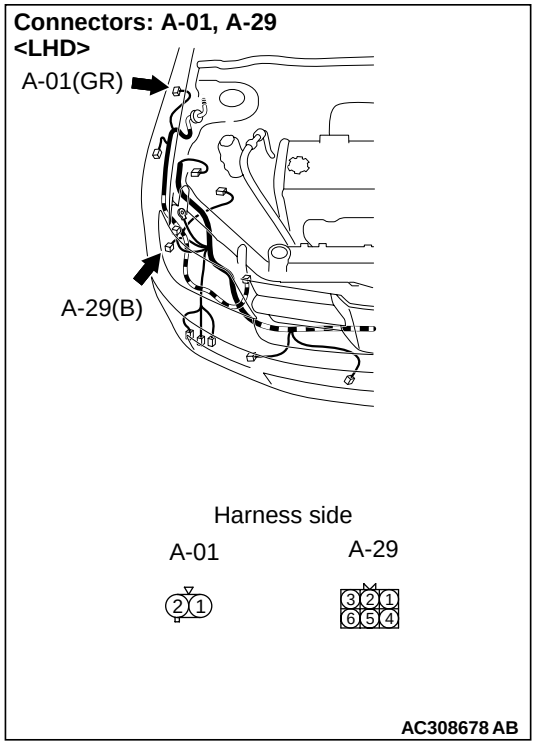

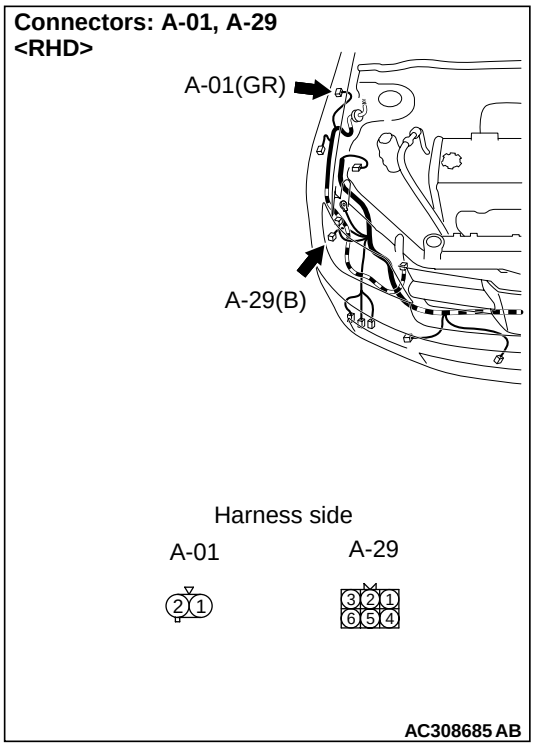

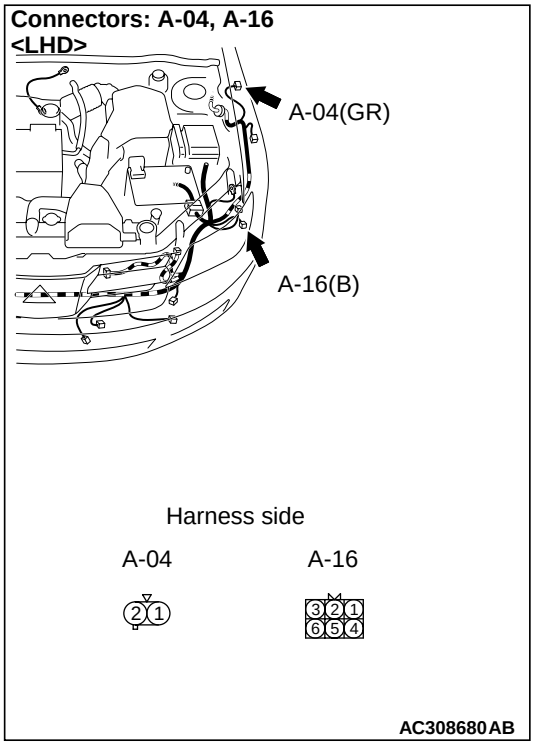

Connectors: A-04, A-16
<RHD>

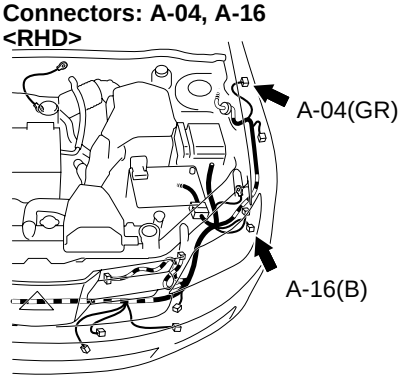

Harness side

A-04

A-16

AC308687 AB

Connectors: C-04, C-05
<RHD>

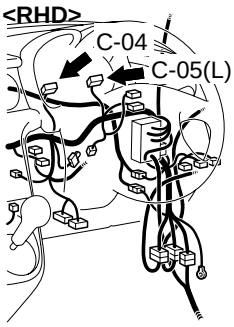

Harness side

C-04

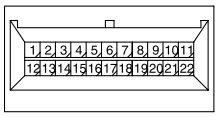

C-05

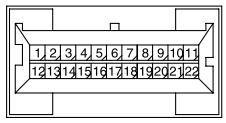

AC308770 AC

Connectors: C-04, C-05
<LHD>

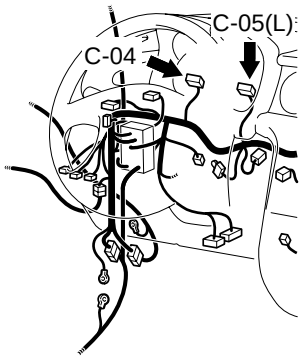

Harness side

C-04

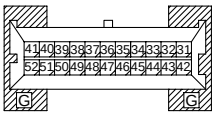

C-05

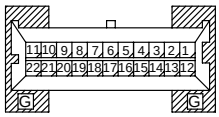

AC308717 AE

Connectors: D-14, D-19
<LHD>

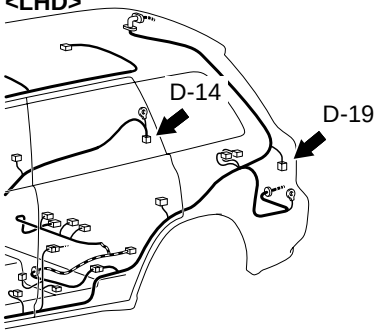

Harness side

D-14

D-19

AC308784 AD

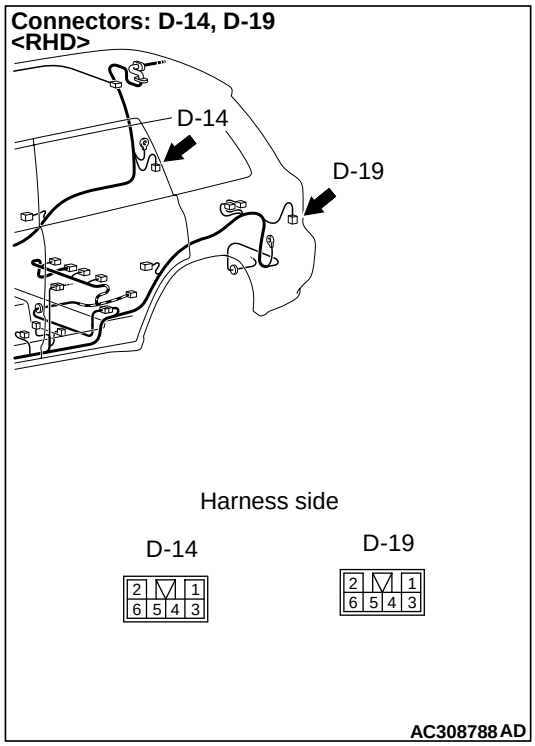

NOTE:

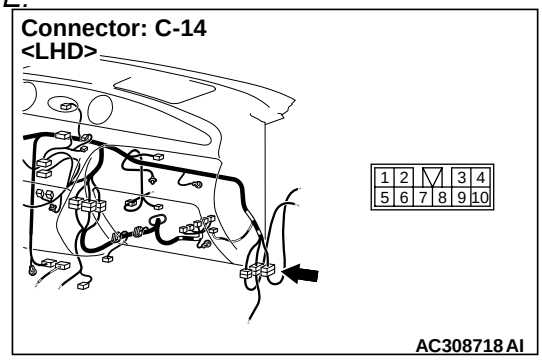

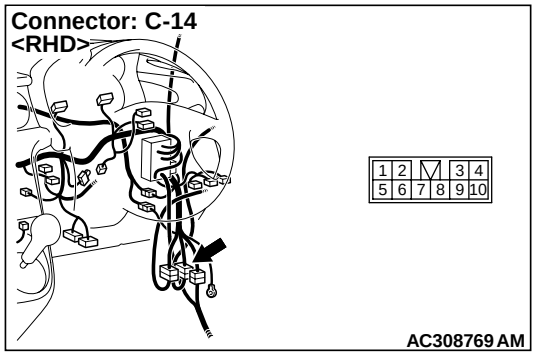

Prior to the wiring harness inspection, check intermediate connector C-14 <side RH>, and repair if necessary.

- Check the earth wires for open circuit.

Q: Is the check result normal?

YES : The trouble can be an intermittent malfunction (Refer to GROUP 00 – How to Cope with Intermittent Malfunction P.00-6).

NO : Repair the wiring harness.

Step 5. Connector check: C-217 ETACS-ECU connector

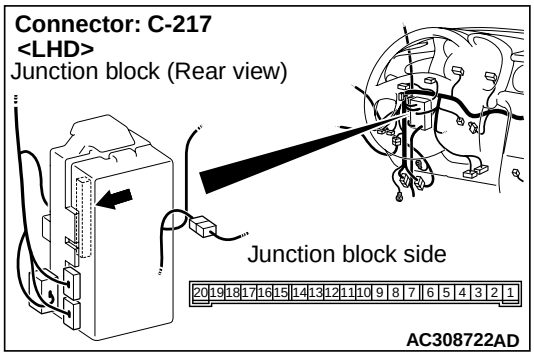

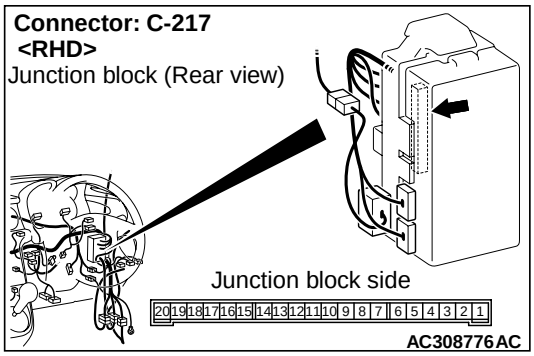

Q: Is the check result normal?

YES : Go to Step 6.

NO : Repair the defective connector.

Step 6. Check the wiring harness from the A-29 <front RH> or A-16 <front LH> front turn-signal lamp connector terminal No.3, the A-01 <side RH> or A-04 <side LH> side turn-signal lamp connector terminal No.2, the D-14 <rear RH> or D-19 <rear LH> rear combination lamp connector terminal No.6, the C-05 <turn-signal indicator lamp RH> combination meter connector terminal No.10 or C-04 <turn-signal indicator lamp LH> combination lamp connector terminal No.31 to C-217 ETACS-ECU connector terminal No.9 <RH> or 14 <LH>.

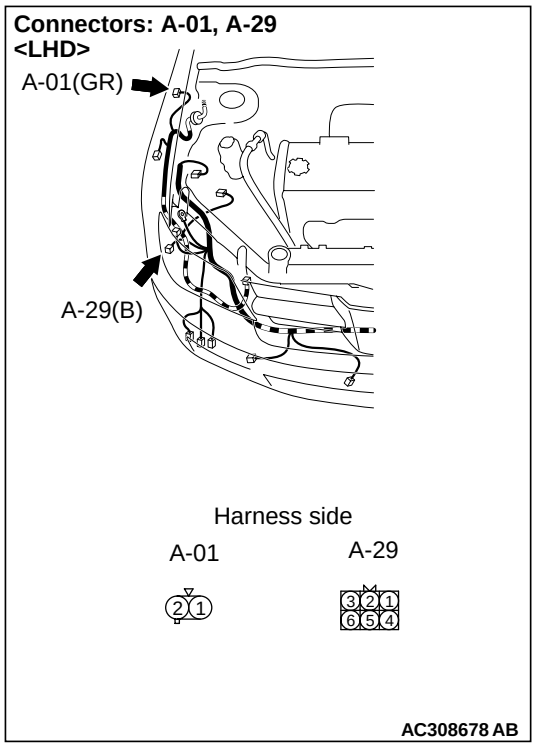

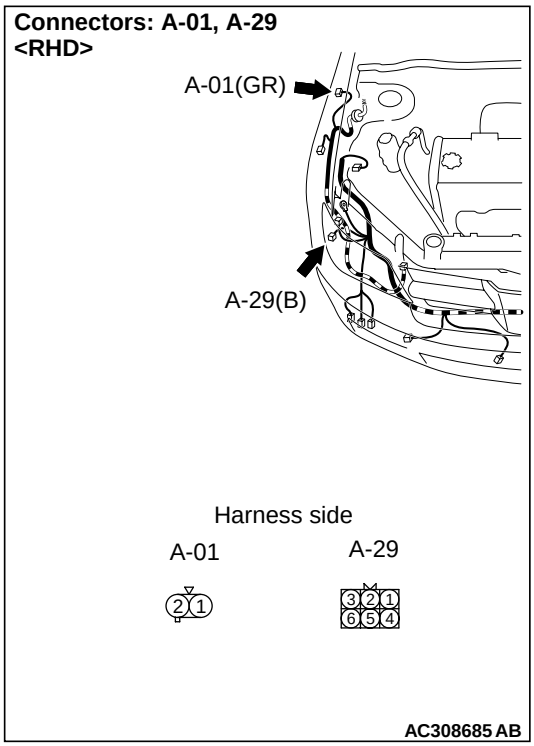

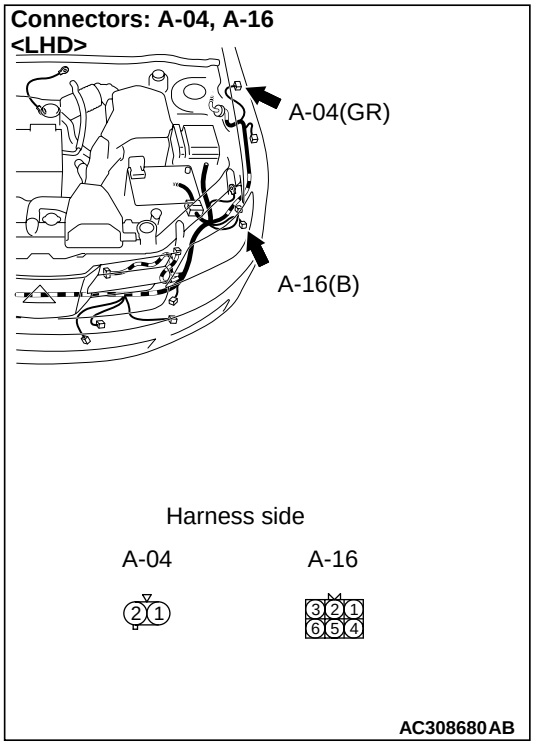

Connectors: A-04, A-16
<RHD>

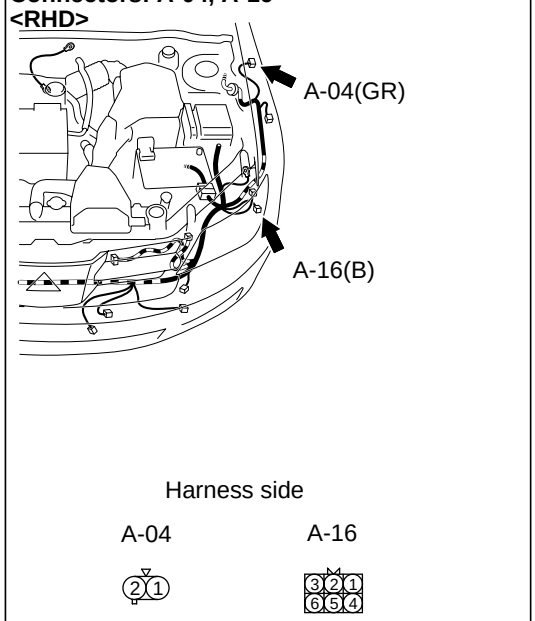

AC308687 AB

Connectors: C-04, C-05
<RHD>

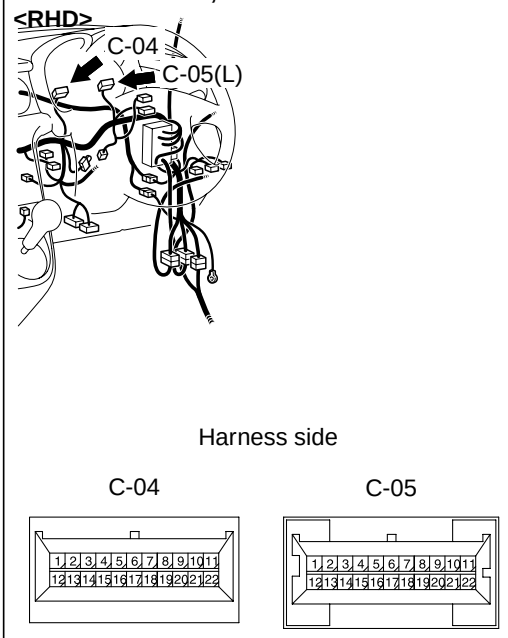

AC308770 AC

Connectors: C-04, C-05, C-116
<LHD>

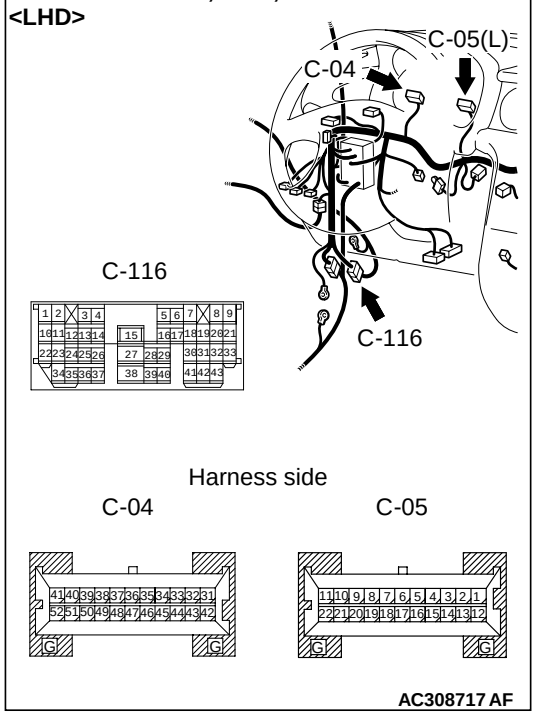

AC308717 AF

Connectors; C-116
<RHD>

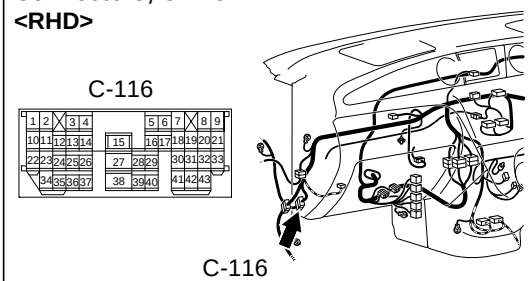

AC308735 AK

Connectors: D-14, D-19
<LHD>

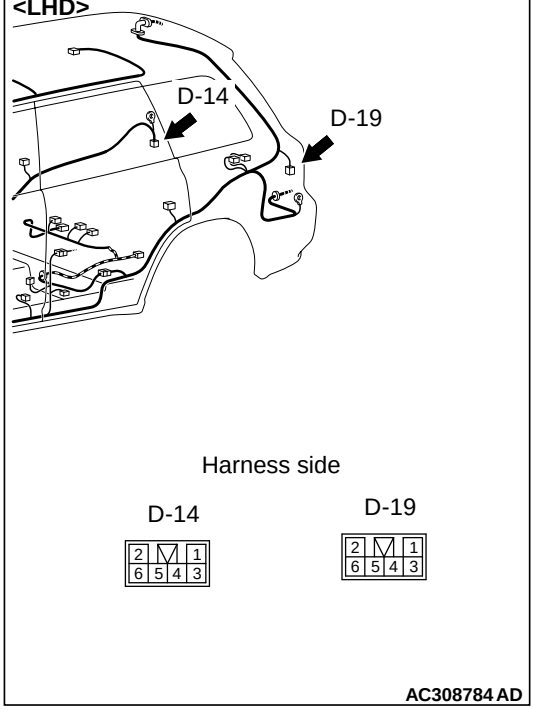

Connectors: D-14, D-19
<RHD>

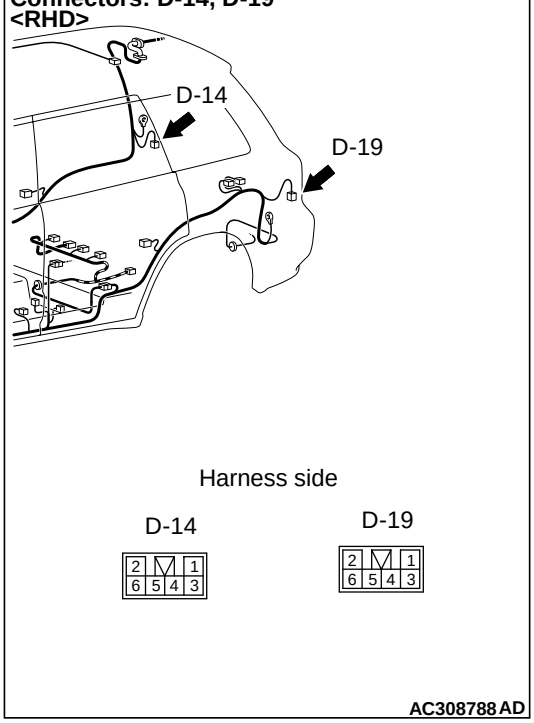

Connector: C-217
<LHD>
Junction block (Rear view)

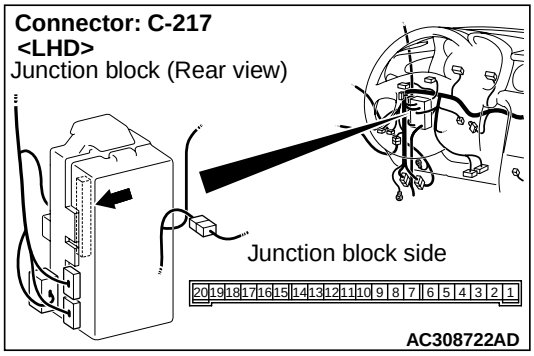

Connector: C-217
<RHD>
Junction block (Rear view)

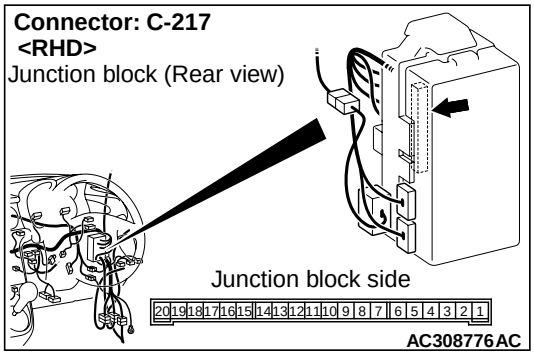

NOTE:

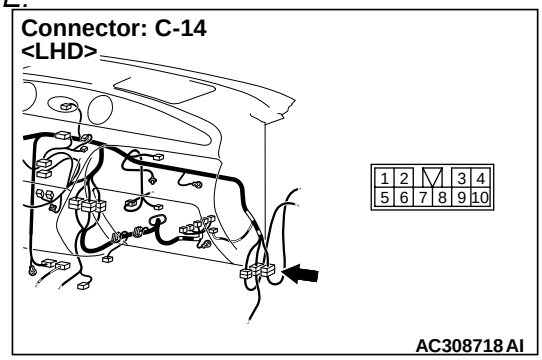

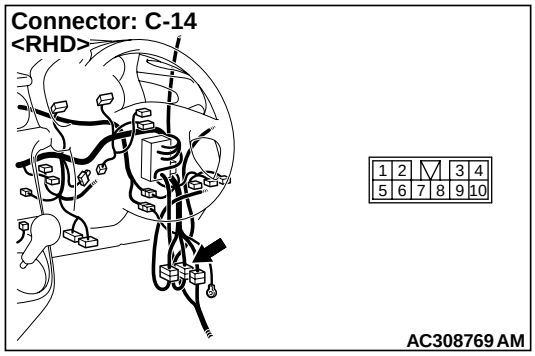

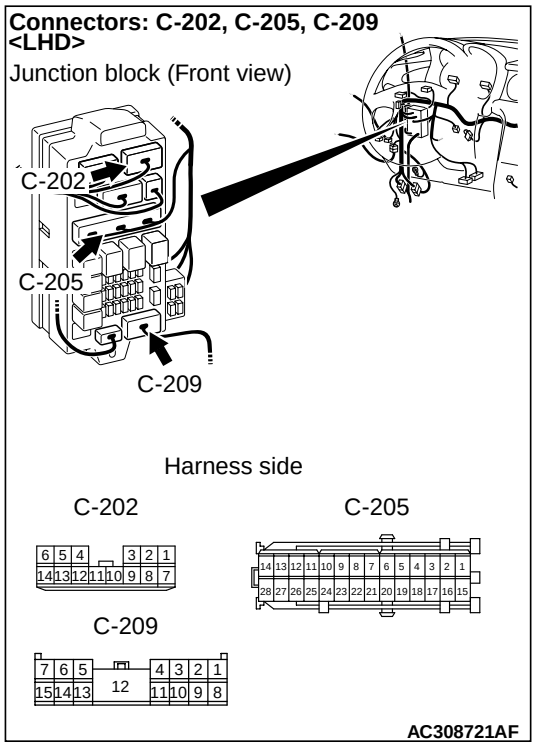

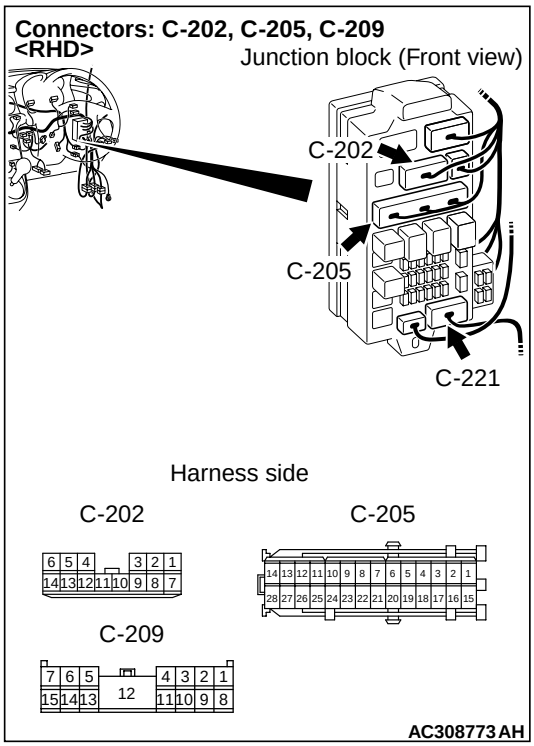

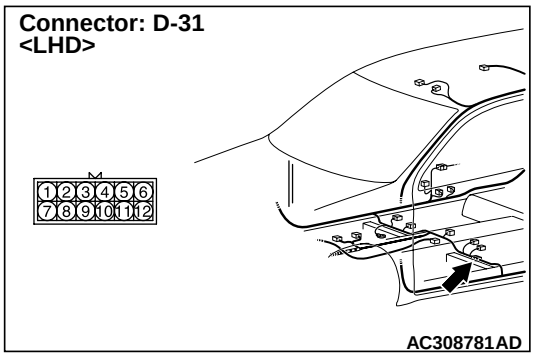

Prior to the wiring harness inspection, check intermediate connector C-14 <side RH>, C-116 <front or side LH> or D-31 <rear RH (L.H. drive vehicles)> and junction block connector C-202 <front, side and rear LH (R.H. drivevehicles)>, C-209 <rear (L.H. drivevehicles)> or C-221 <rear RH (R.H. drivevehicles)> or C-205 <turn-signal indicator lamp>, and repair if necessary.

- Check the output lines for open circuit.

Q: Is the check result normal?

YES : Go to Step 7.

NO : Repair the wiring harness.

Step 7. Retest the system.
Check that the turn-signal lamps and the indicator lamps illuminate normally.

Q: Is the check result normal?

The lamps illuminate normally at both high and low beams. : The trouble can be an intermittent malfunction (Refer to GROUP 00 – How to Cope with Intermittent Malfunction P.00-6).

The front turn-signal lamps do not illuminate. : Replace the socket.

The side turn-signal lamps do not illuminate. : Replace the socket.

The rear turn-signal lamps do not illuminate. : Replace the socket assembly.

The turn-signal indicator lamps do not illuminate. : Replace the combination meter.

FOG LAMP

INSPECTION PROCEDURE L-1: The front fog lamps do not illuminate normally.

⚠ CAUTION
Whenever the ECU is replaced, ensure that the input and output signal circuits are normal.

Front Fog Lamp Circuit

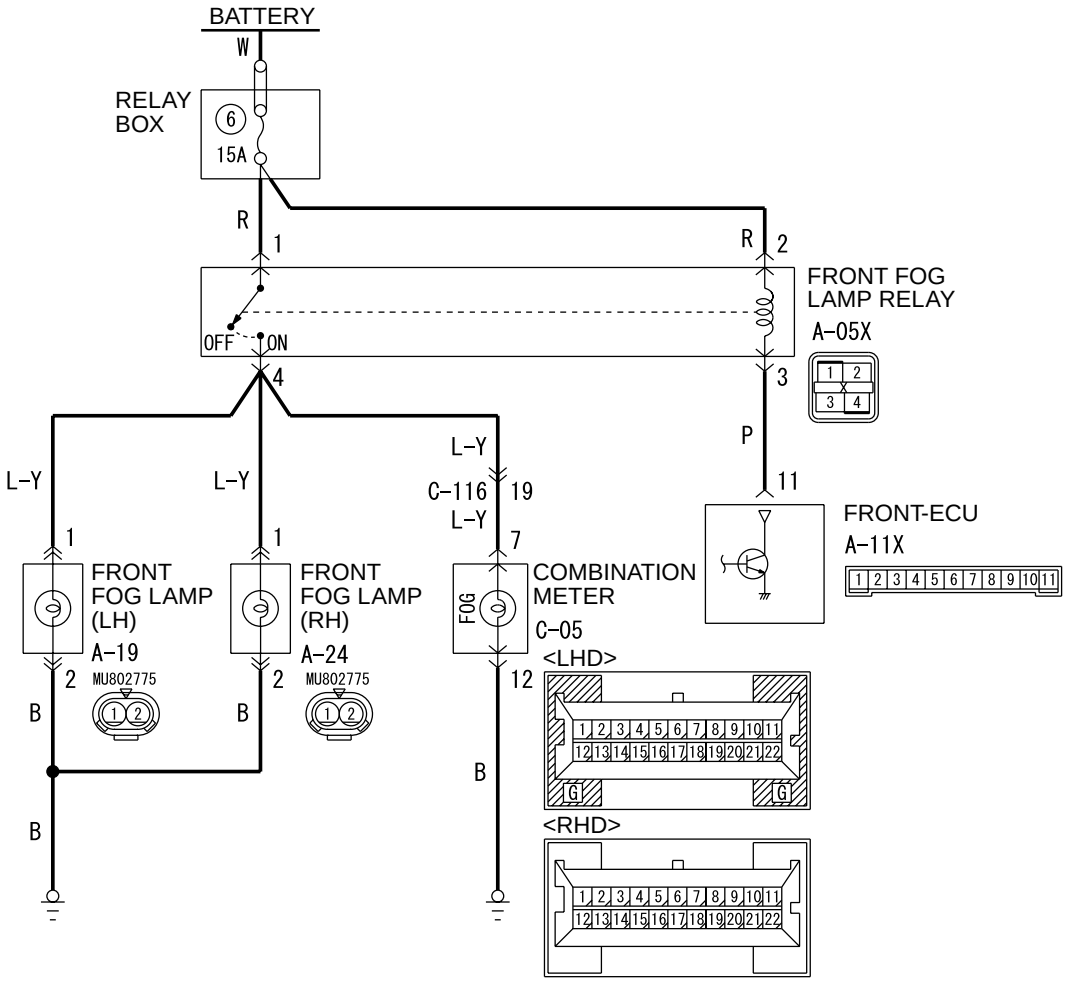

Wire colour code
B : Black LG : Light green G : Green L : Blue W : White Y : Yellow SB : Sky blue
BR : Brown O : Orange GR : Gray R : Red P : Pink V : Violet

W4Z54E30AA

OPERATION
The ETACS-ECU operates this function in accordance with the input signals below.
- Tail lamp switch
- Headlamp switch
- Front fog lamp switch

If the front fog lamps do not illuminate normally, these input signal circuit(s) or the ETACS-ECU may be defective.

POSSIBLE CAUSES
- Malfunction of the column switch
- Malfunction of the front fog lamp switch
- Malfunction of the ETACS-ECU
- Damaged harness wires and connectors

DIAGNOSTIC PROCEDURE

Step 1. Check that the tail lamps and headlamps operate.
Check that the tail lamps and headlamps illuminate normally.

Q: Is the check result normal?
YES : Go to Step 2.
NO : Check the tail lamps and the headlamps (Refer to trouble symptom chart P.54B-41).

Step 2. Pulse check
Check the input signals below, which are related to the front fog lamps.

System switch	Check condition
Ignition switch (IG1)	When turned from ACC to ON
Tail lamp switch	When the lighting switch is turned to the TAIL position
Headlamp switch	When the lighting switch is turned to the HEADLAMP position
Front fog lamp switch	When the front fog lamp switch is turned from off to on

OK: The MUT-II/III sounds or the voltmeter needle fluctuates.

Q: Is the check result normal?
All the signals are received normally. : Go to Step 3.
The ignition switch (IG1) signal is not received. : Refer to inspection procedure N-2 "The ignition switch (IG1) signal is not received P.54B-301."
The tail lamp switch signal is not received. : Refer to inspection procedure N-5 "The column switch (lighting and turn-signal lamp switch) signal is not received P.54B-319."
The headlamp switch signal is not received. : Refer to inspection procedure N-5 "The column switch (lighting and turn-signal lamp switch) signal is not received P.54B-319."
The front fog lamp switch signal is not received. : Refer to inspection procedure N-15 "The front fog lamp switch signal is not received P.54B-367."

Step 3. Connector check: A-05X front fog lamp relay connector.

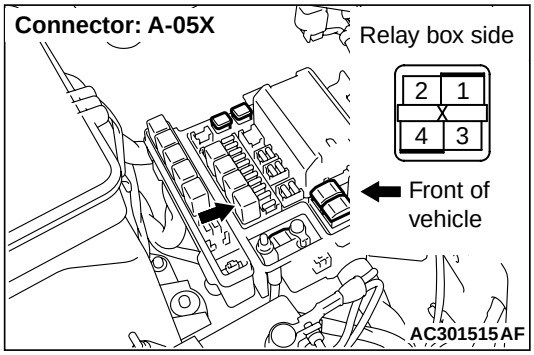

Q: Is the check result normal?
YES : Go to Step 4.
NO : Repair the defective connector.

Step 4. Check the front fog lamp relay.
Refer to GROUP 54A – Front fog lamp P.54A-82.

Q: Is the check result normal?
YES : Go to Step 5.
NO : Replace the front fog lamp relay.

Step 5. Measure the voltage at the A-05X front fog lamp relay connector.

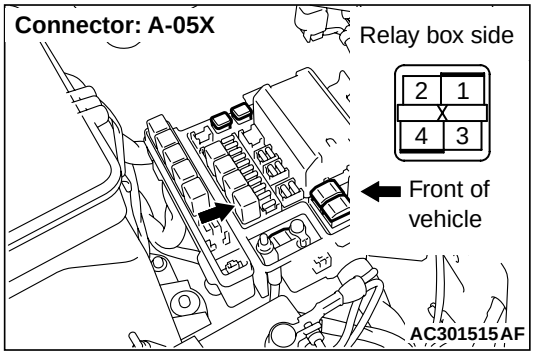

(1) Remove the front fog lamp relay, and measure at the relay box side.

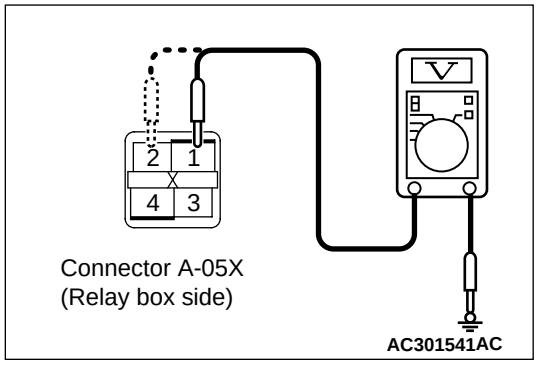

(2) Check the voltage between the front fog lamp

relay connector and body earth.
- Voltage between A-05X front fog lamp relay connector terminal No.1 and body earth
- Voltage between A-05X front fog lamp relay connector terminal No.2 and body earth

OK: System voltage

Q: Is the check result normal?
YES : Go to Step 7.
NO : Go to Step 6.

Step 6. Check the wiring harness between A-05X front fog lamp relay connector (terminal Nos. 1 and 2) and the battery.

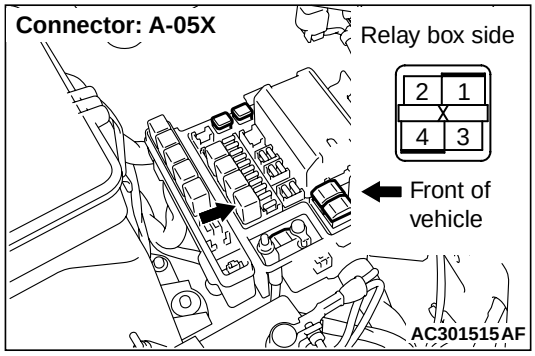

- Check the power supply line for open circuit.

Q: Is the check result normal?
YES : The trouble can be an intermittent malfunction (Refer to GROUP 00 – How to Cope with Intermittent Malfunction P.00-6).
NO : Repair the wiring harness.

Step 7. Connector check: A-11X front-ECU connector

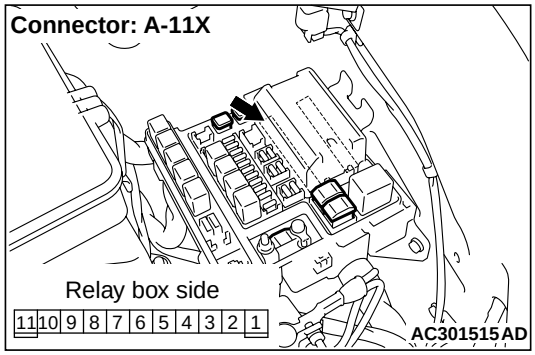

Q: Is the check result normal?
YES : Go to Step 8.
NO : Repair the defective connector.

Step 8. Check the wiring harness between A-05X front fog lamp relay connector terminal No.3 and A-11X front-ECU connector terminal No.11.

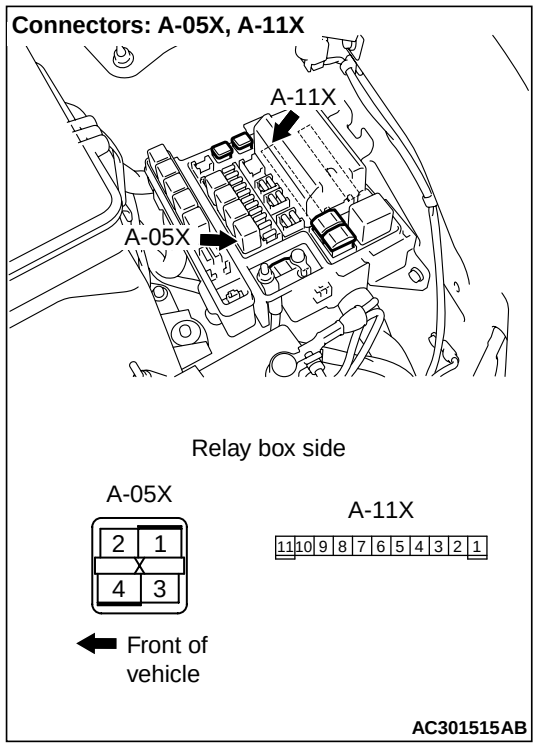

- Check the output lines for open circuit.

Q: Is the check result normal?
YES : Go to Step 9.
NO : Repair the wiring harness.

Step 9. Retest the system.
Check that the front fog lamps illuminate normally.

Q: Is the check result normal?
YES : The trouble can be an intermittent malfunction (Refer to GROUP 00 – How to Cope with Intermittent Malfunction P.00-6).
NO : Replace the ETACS-ECU.

INSPECTION PROCEDURE L-2: The rear fog lamps do not illuminate normally.

⚠ CAUTION

Whenever the ECU is replaced, ensure that the input and output signal circuits are normal.

Rear Fog Lamp Circuit <LHD>

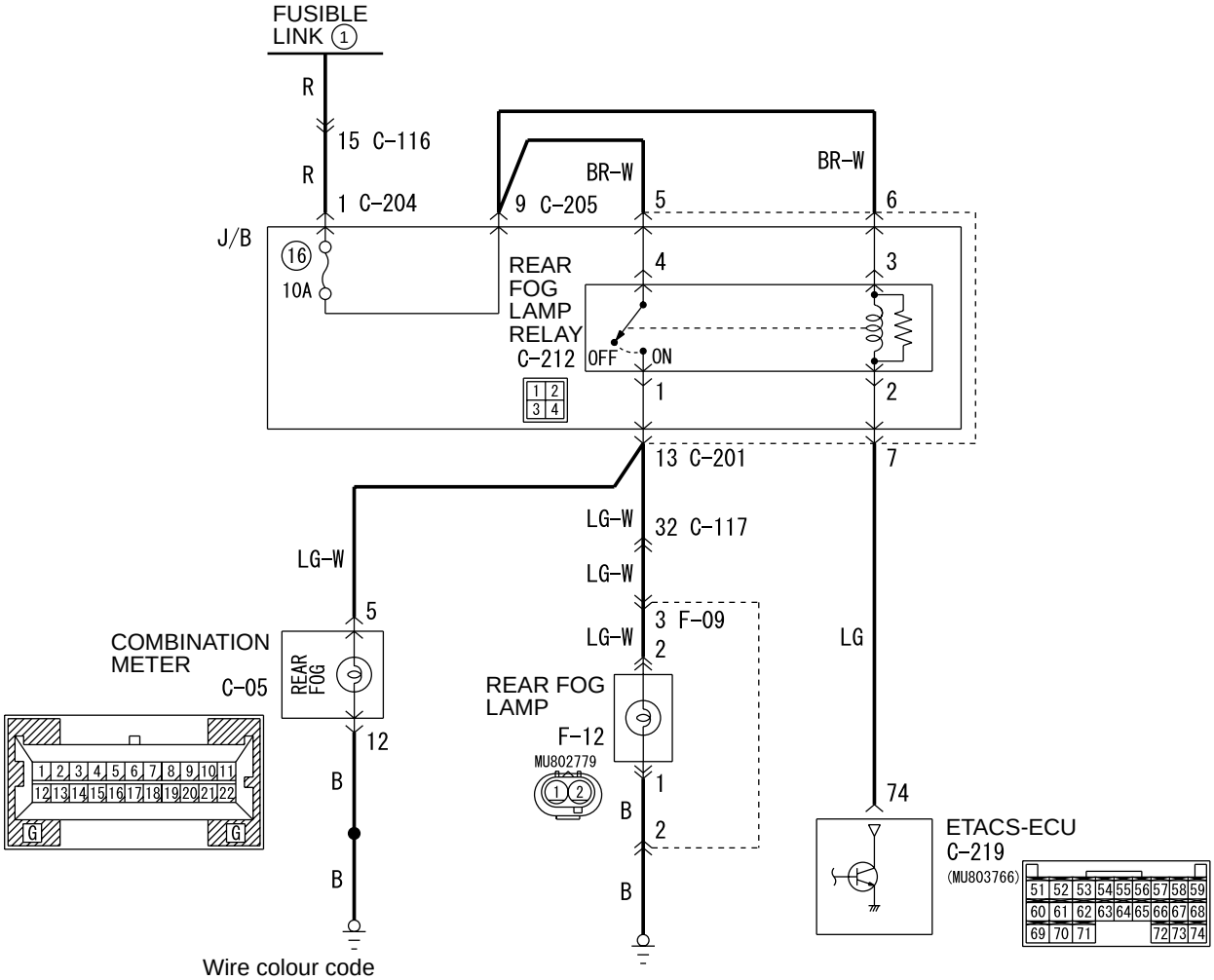

Wire colour code
B : Black LG : Light green G : Green L : Blue W : White Y : Yellow SB : Sky blue
BR : Brown O : Orange GR : Gray R : Red P : Pink V : Violet

W4Z54E31AA

Rear Fog Lamp Circuit <RHD>

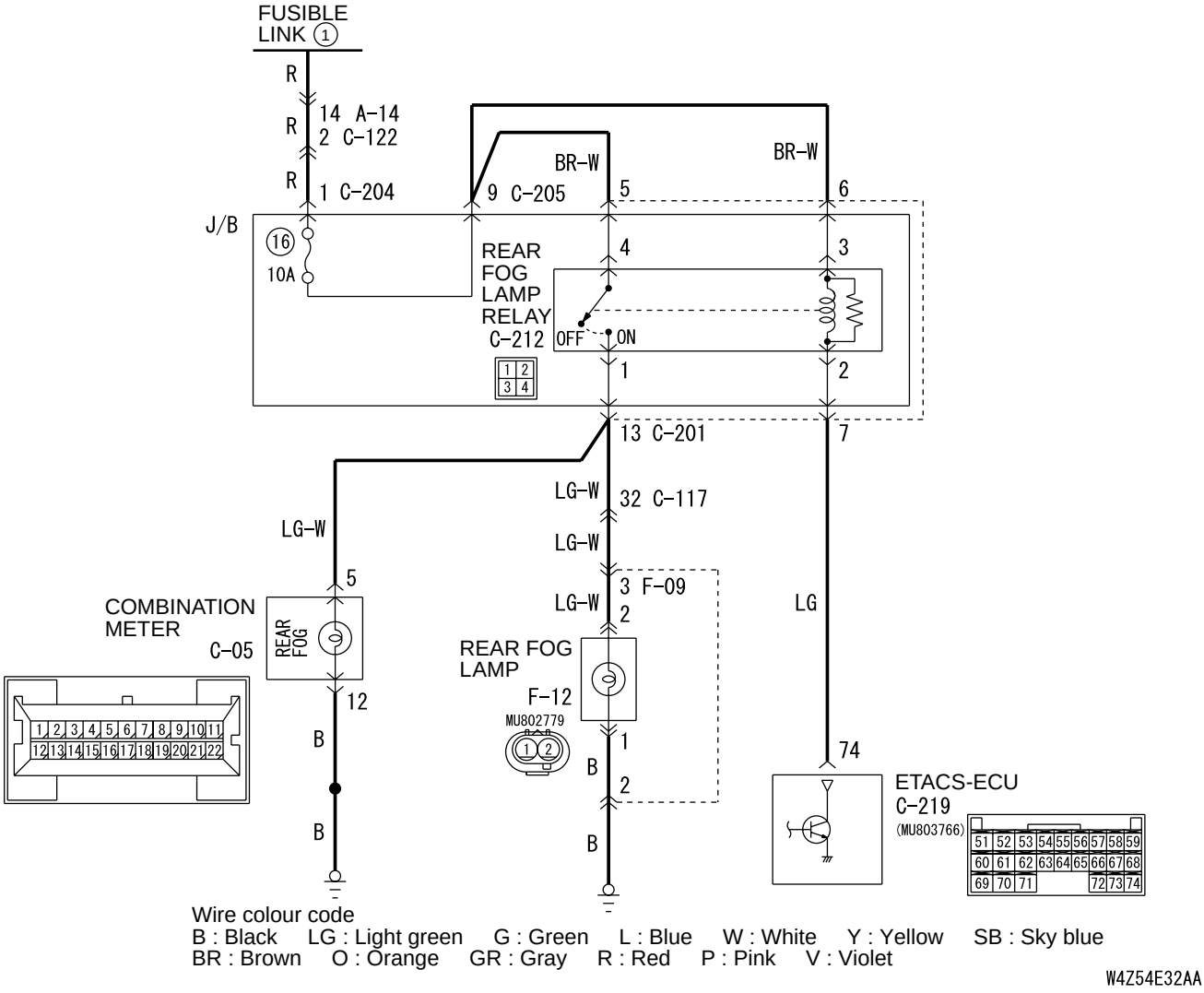

OPERATION

The ETACS-ECU operates this function in accordance with the input signals below.

- Tail lamp switch
- Headlamp switch
- Rear fog lamp switch

If the rear fog lamps do not illuminate normally, these input signal circuit(s) or the ETACS-ECU may be defective.

POSSIBLE CAUSES

- Malfunction of the column switch
- Malfunction of the fog lamp switch
- Malfunction of the ETACS-ECU
- Damaged harness wires and connectors

DIAGNOSTIC PROCEDURE

Step 1. Check that the tail lamps and headlamps operate.

Check that the tail lamps and headlamps illuminate normally.

Q: Is the check result normal?

YES : Go to Step 2.

NO : Check the tail lamps and the headlamps (Refer to trouble symptom chart P.54B-41).

Step 2. Pulse check
Check the input signals below, which are related to the rear fog lamps.

System switch	Check condition
Ignition switch (IG1)	When turned from ACC to ON
Tail lamp switch	When the lighting switch is turned to the TAIL position
Headlamp switch	When the lighting switch is turned to the HEADLAMP position
Rear fog lamp switch	When the rear fog lamp switch is turned from off to on

OK: The MUT-II/III sounds or the voltmeter needle fluctuates.

Q: Is the check result normal?
All the signals are received normally. : Go to Step 3.
The ignition switch (IG1) signal is not received. : Refer to inspection procedure N-2 "The ignition switch (IG1) signal is not received P.54B-301."
The tail lamp switch signal is not received. : Refer to inspection procedure N-5 "The column switch (lighting and turn-signal lamp switch) signal is not received P.54B-319."
The headlamp switch signal is not received. : Refer to inspection procedure N-5 "The column switch (lighting and turn-signal lamp switch) signal is not received P.54B-319."
The rear fog lamp switch signal is not received. : Refer to inspection procedure N-16 "The rear fog lamp switch signal is not received P.54B-371."

Step 3. Connector check: C-212 rear fog lamp relay connector

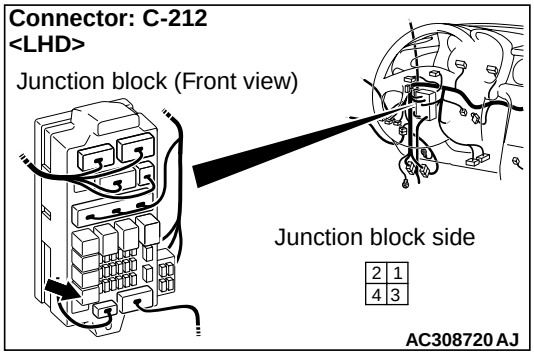

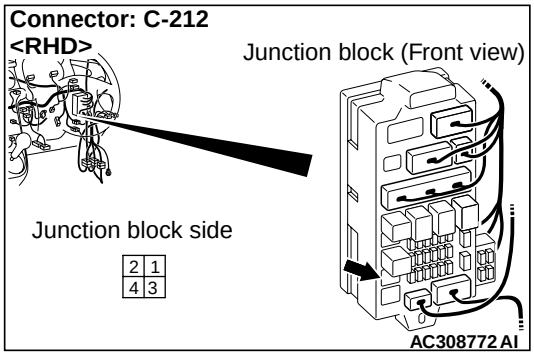

Q: Is the check result normal?
YES : Go to Step 4.
NO : Repair the defective connector.

Step 4. Check the rear fog lamp relay.
Refer to GROUP 54A – Rear fog lamp P.54A-85.

Q: Is the check result normal?
YES : Go to Step 5.
NO : Replace the rear fog lamp relay.

Step 5. Measure the voltage at the C-212 rear fog lamp relay connector.

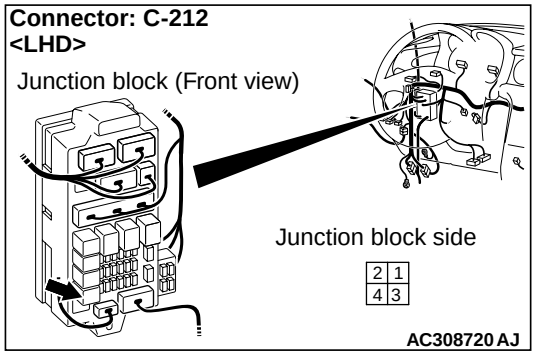

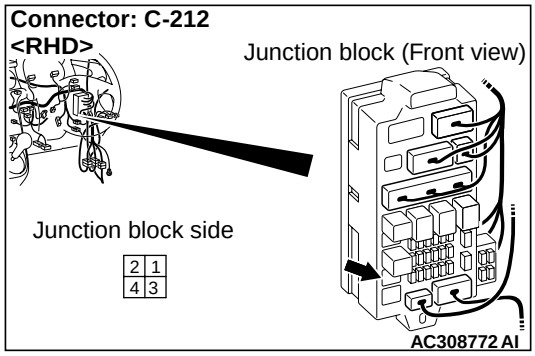

(1) Remove the rear fog lamp relay, and measure at the relay box side.

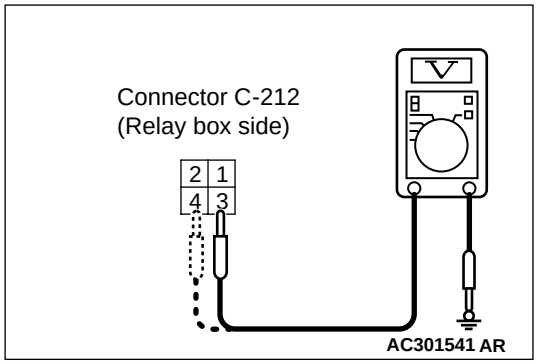

(2) Check the voltage between the rear fog lamp relay connector and body earth.
- Voltage between C-212 rear fog lamp relay connector terminal No.3 and body earth
- Voltage between C-212 rear fog lamp relay connector terminal No.4 and body earth

OK: System voltage

Q: Is the check result normal?
YES : Go to Step 7.
NO : Go to Step 6.

Step 6. Check the wiring harness between C-212 rear fog lamp relay connector (terminal Nos. 3 and 4) and the battery.

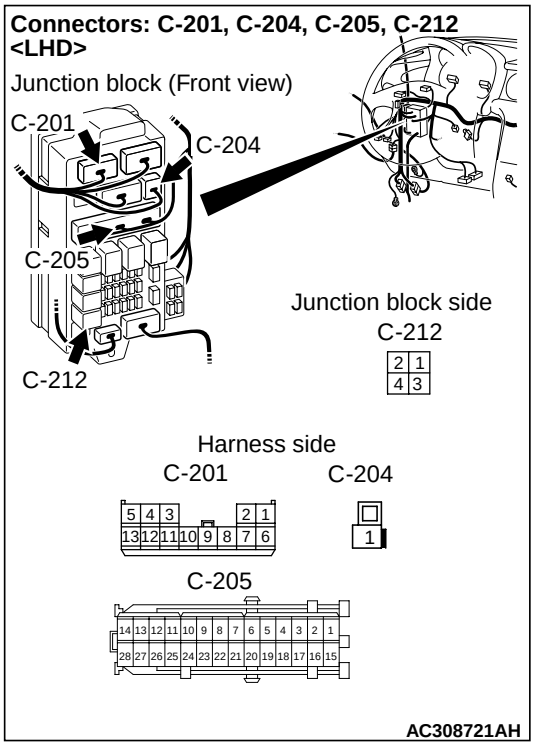

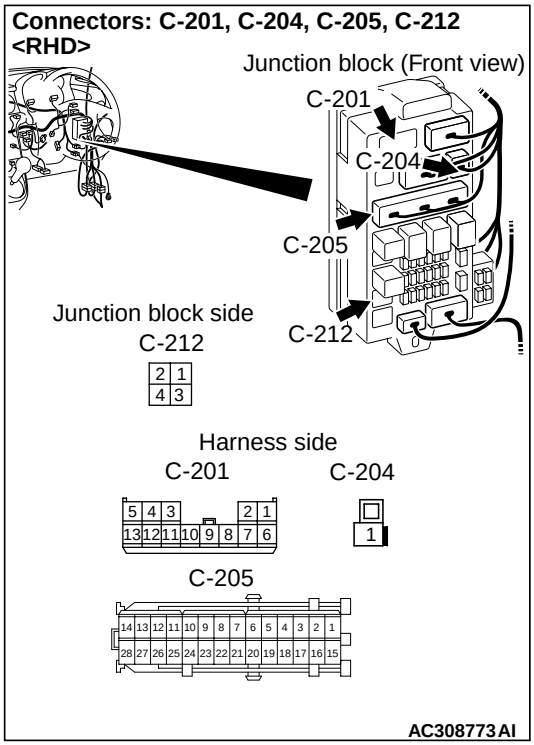

NOTE:

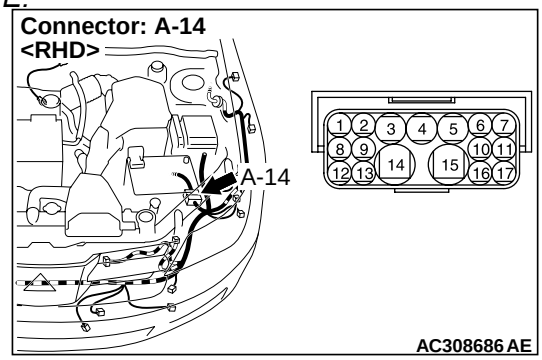

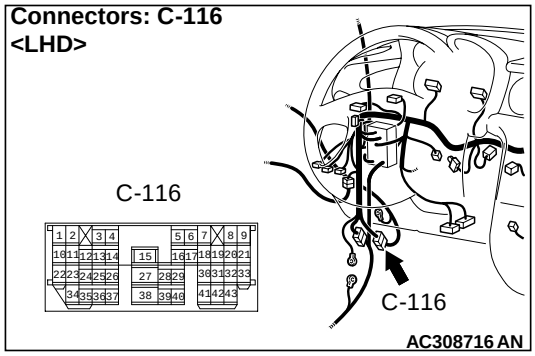

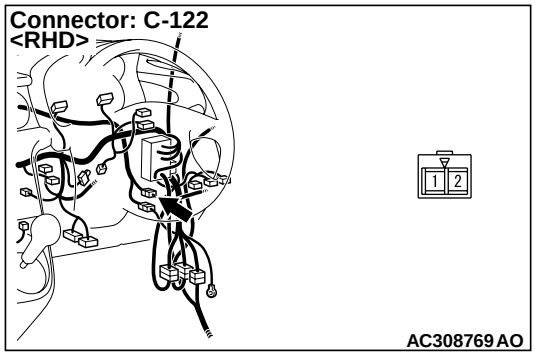

Prior to the wiring harness inspection, check intermediate connector C-116 <L.H. drive vehicles>, A-14 <R.H. drive vehicles>, C-122 <R.H. drive vehicles> and junction block connectors C-201, C-204 and C-205, and repair if necessary.

- Check the power supply line for open circuit.

Q: Is the check result normal?

YES : The trouble can be an intermittent malfunction (Refer to GROUP 00 – How to Cope with Intermittent Malfunction P.00-6).

NO : Repair the wiring harness.

Step 7. Connector check: C-219 ETACS-ECU connector

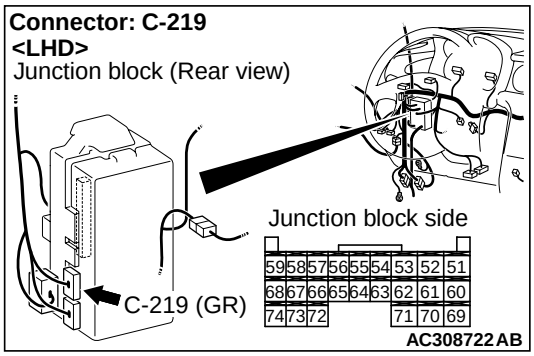

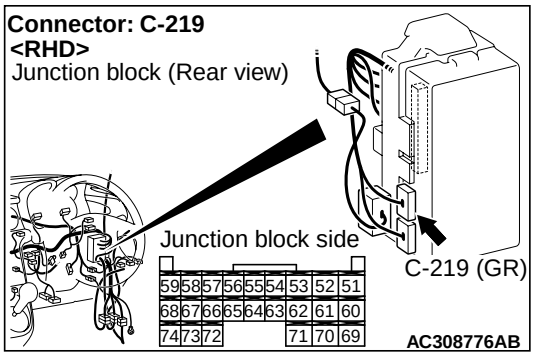

Q: Is the check result normal?

YES : Go to Step 8.

NO : Repair the defective connector.

Step 8. Check the wiring harness between C-212 rear fog lamp relay connector terminal No.2 and C-219 ETACS-ECU connector terminal No.74.

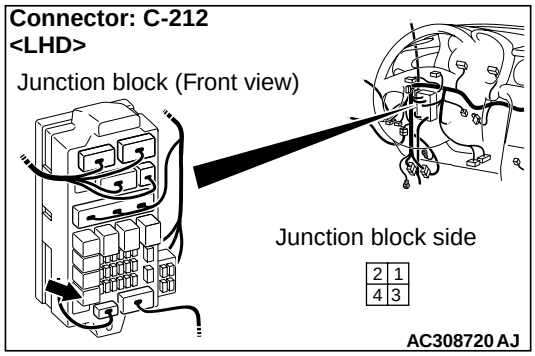

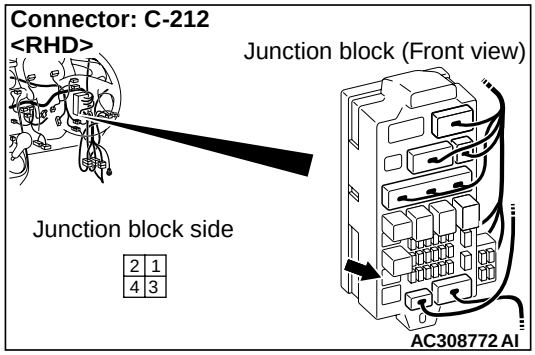

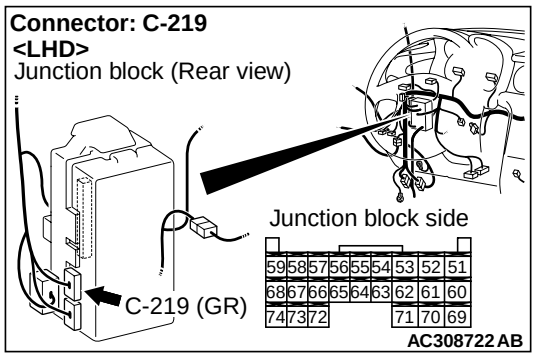

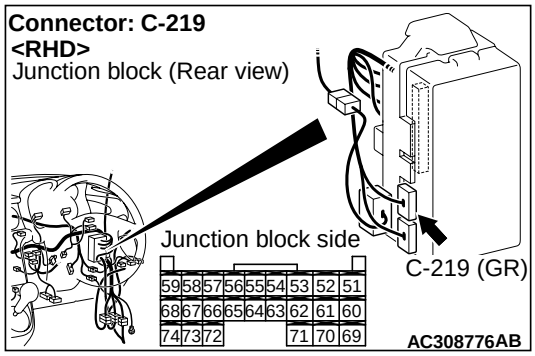

NOTE: Prior to the wiring harness inspection, check junction block connector C-201, and repair if necessary.

- Check the output lines for open circuit.

Q: Is the check result normal?

YES : Go to Step 9.
NO : Repair the wiring harness.

Step 9. Retest the system.
Check that the rear fog lamps illuminate normally.

Q: Is the check result normal?
YES : The trouble can be an intermittent malfunction (Refer to GROUP 00 – How to Cope with Intermittent Malfunction P.00-6).
NO : Replace the ETACS-ECU.

INSPECTION PROCEDURE L-3: Any of the front fog lamps does not illuminate.

⚠ CAUTION

Whenever the ECU is replaced, ensure that the input and output signal circuits are normal.

Front Fog Lamp Circuit

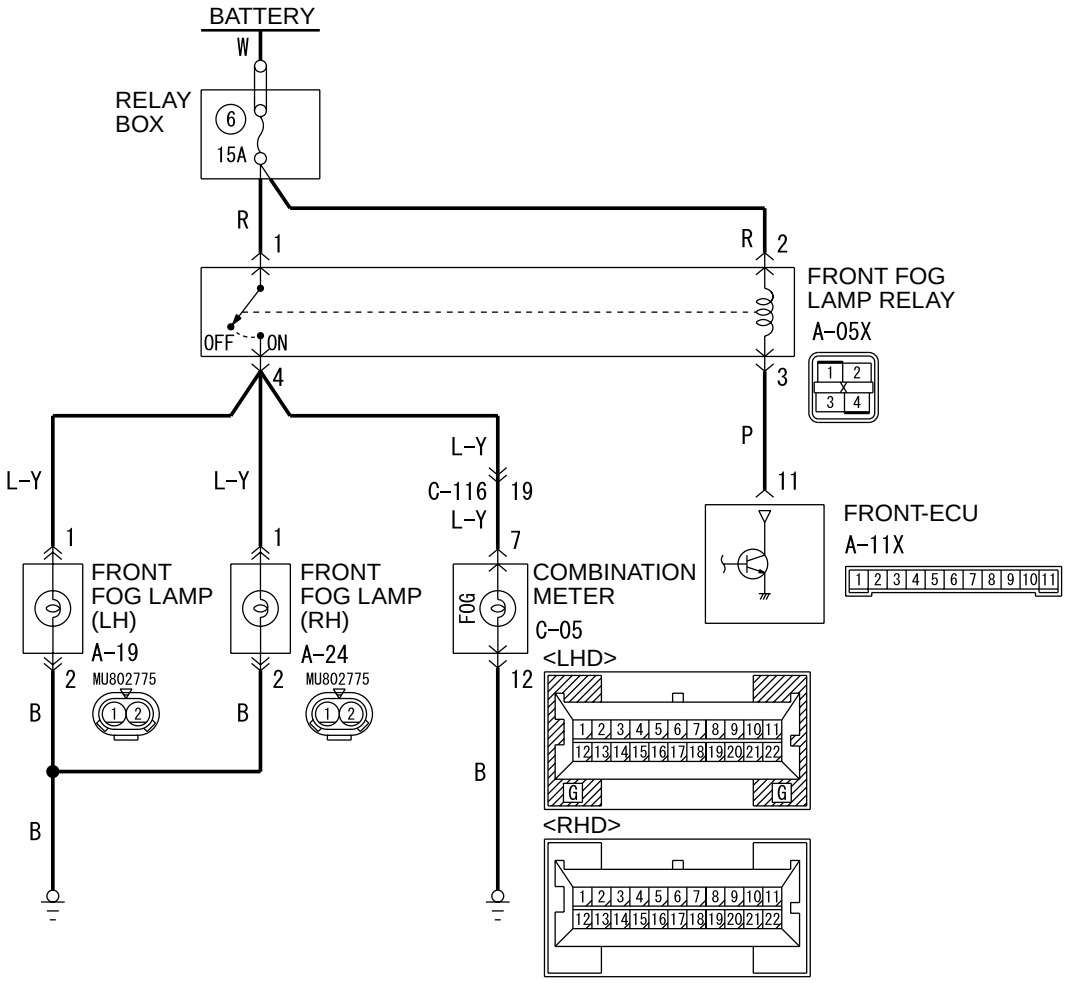

Wire colour code
B : Black LG : Light green G : Green L : Blue W : White Y : Yellow SB : Sky blue
BR : Brown O : Orange GR : Gray R : Red P : Pink V : Violet

W4Z54E30AA

COMMENTS ON TROUBLE SYMPTOM

If any of the front fog lamps do not illuminate, the wiring harness connector(s), the bulb or the fuse may be defective or burned out.

POSSIBLE CAUSES

- Burned-out front fog lamp bulb
- Damaged harness wires and connectors

DIAGNOSTIC PROCEDURE

Step 1. Connector check: A-24 <RH> or A-19 <LH> front fog lamp connector, or C-05 <front fog lamp indicator lamp> combination meter connector

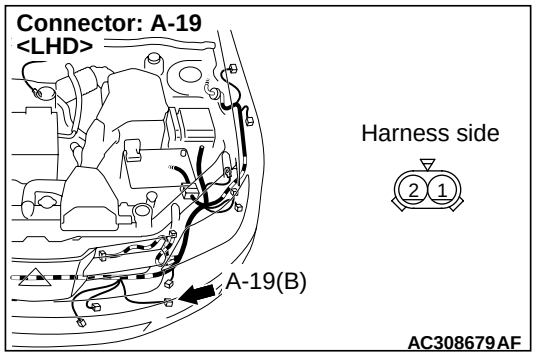

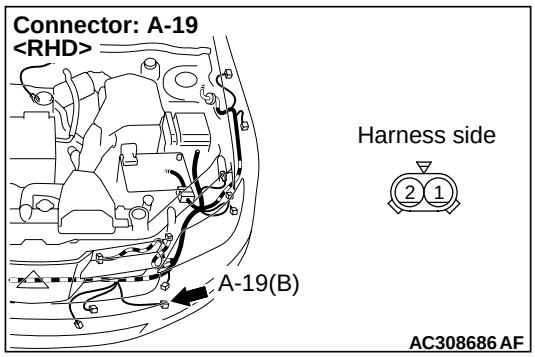

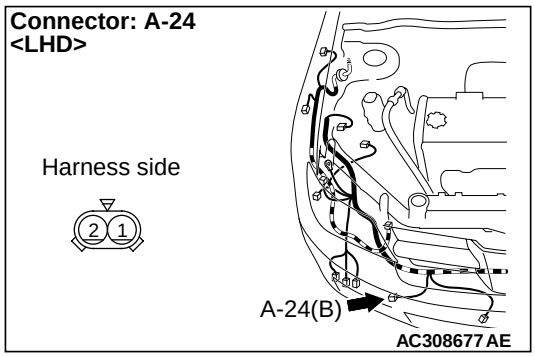

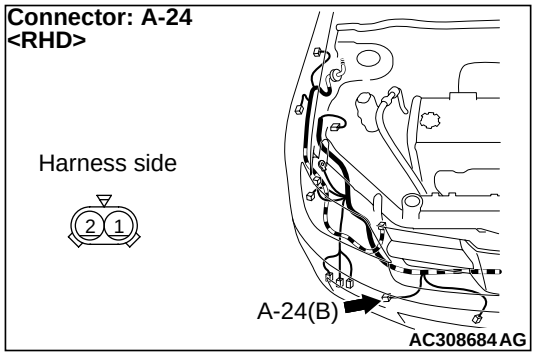

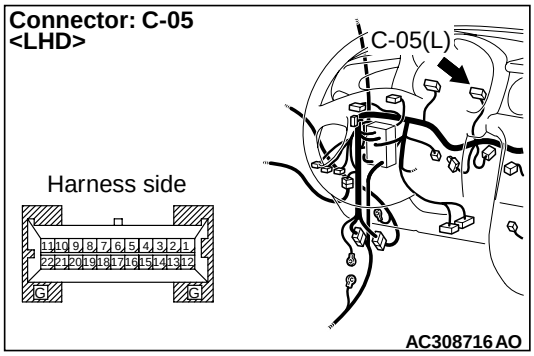

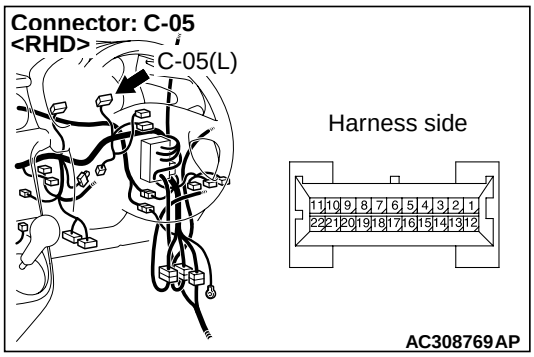

Q: Is the check result normal?
YES : Go to Step 2.
NO : Repair the defective connector.

Step 2. Check the bulbs of the front fog lamps or the front fog lamp indicator lamp.
Check the bulb(s) of the defective lamp.

Q: Is the check result normal?
YES : Go to Step 3.
NO : Replace the bulb(s) of the defective lamp.

Step 3. Measure the resistance at A-24 <RH> or A-19 <LH> front fog lamp connector, or C-05 <front fog lamp indicator lamp> combination meter connector.

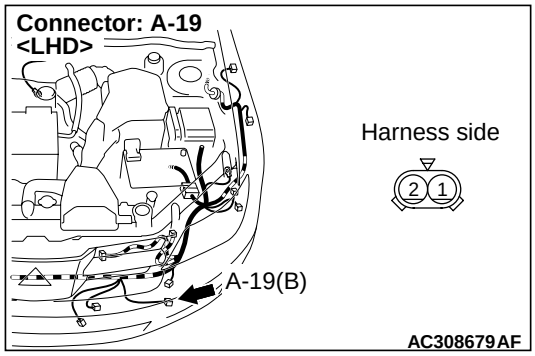

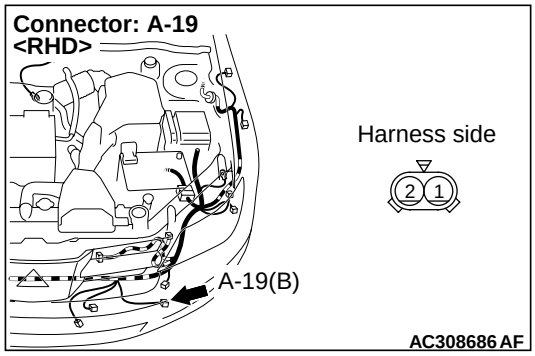

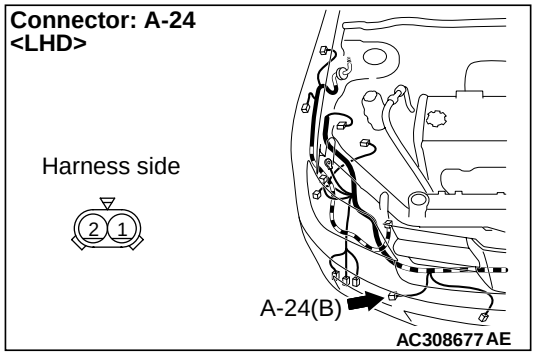

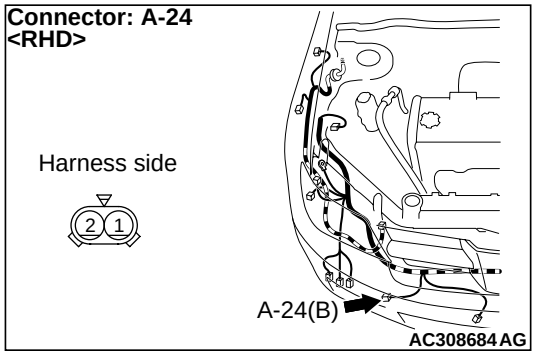

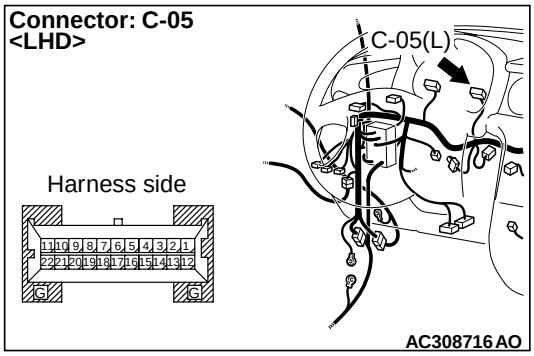

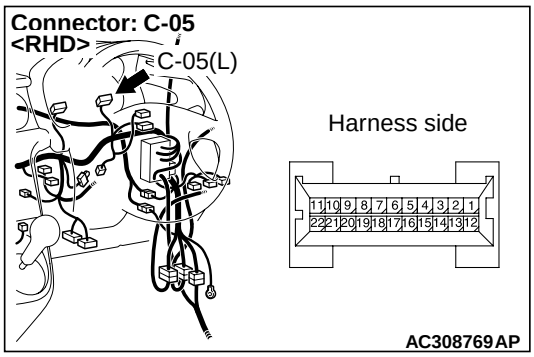

(1) Disconnect the connector, and measure at the wiring harness side.

(2) Check the resistance between the lamp connector and body earth.

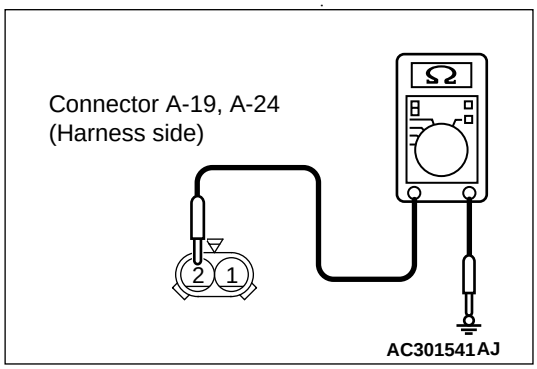

Resistance between A-24 <RH> front fog lamp connector terminal No.2 and body earth

- Resistance between A-19 <LH> front fog lamp connector terminal No.2 and body earth

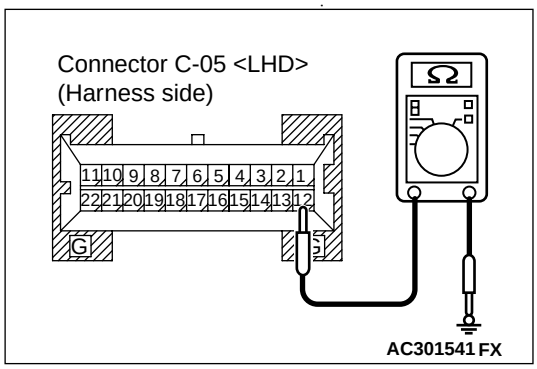

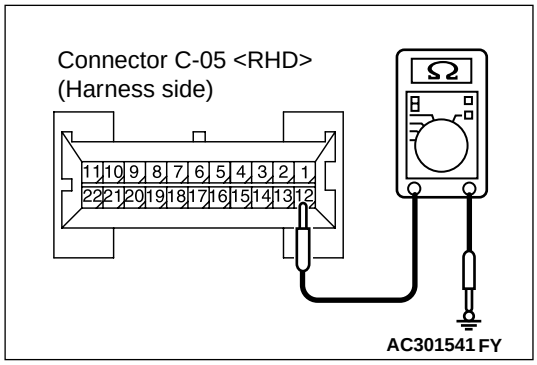

Resistance between C-05 <front fog lamp indicator lamp> combination meter connector terminal No.12 and body earth

OK: 2 Ω or less

Q: Is the check result normal?
YES : Go to Step 5.
NO : Go to Step 4.

Step 4. Check the wiring harness from A-24 <RH> or A-19 <LH> front fog lamp connector terminal No.2 or C-05 <front fog lamp indicator lamp> combination meter connector terminal No.12 to body earth.

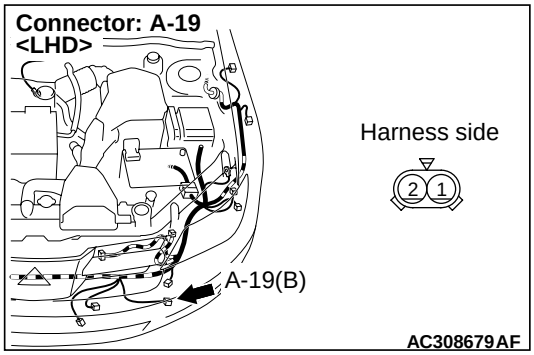

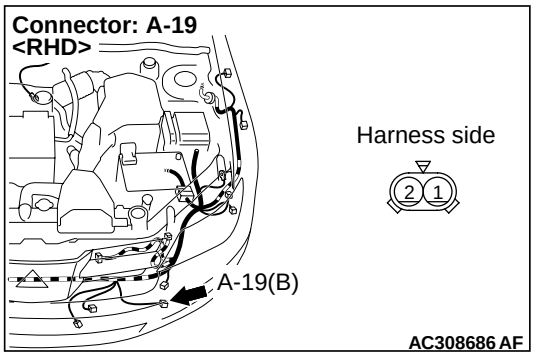

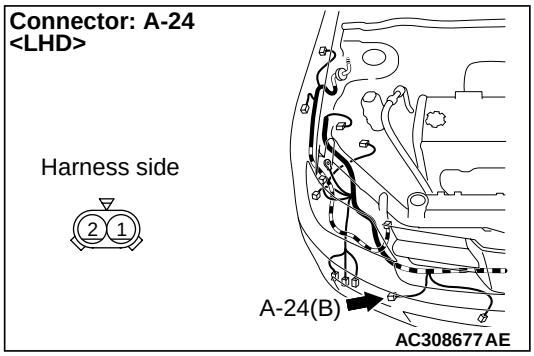

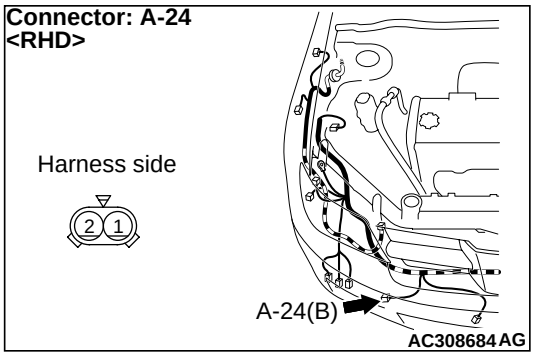

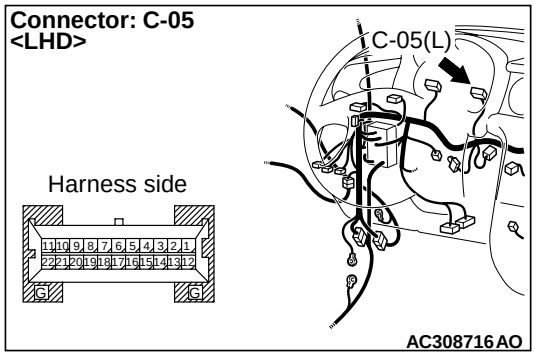

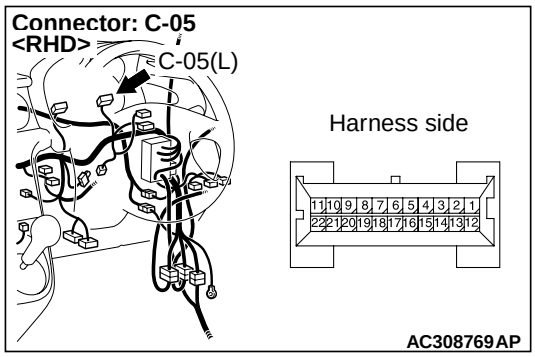

- Check the earth wires for open circuit.

Q: Is the check result normal?
YES : The trouble can be an intermittent malfunction (Refer to GROUP 00 – How to Cope with Intermittent Malfunction P.00-6).
NO : Repair the wiring harness.

Step 5. Connector check: A-05X fog lamp relay connector

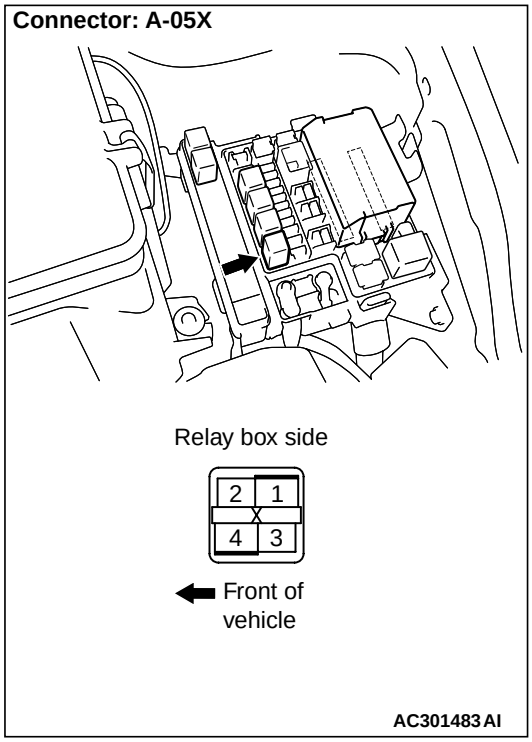

Q: Is the check result normal?
YES : Go to Step 6.
NO : Repair the defective connector.

Step 6. Check the wiring harness from A-24 <RH> or A-19 <LH> front fog lamp connector terminal No.1 or C-05 <front fog lamp indicator lamp> combination meter connector terminal No.7 to A-05X fog lamp relay connector terminal No.4.

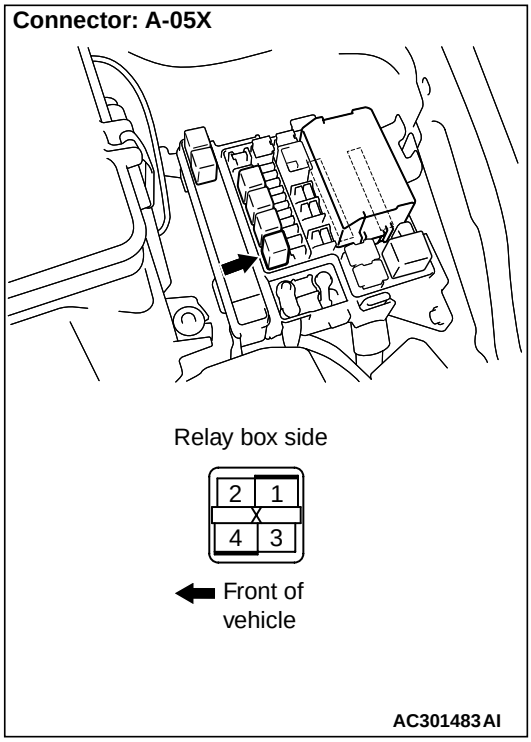

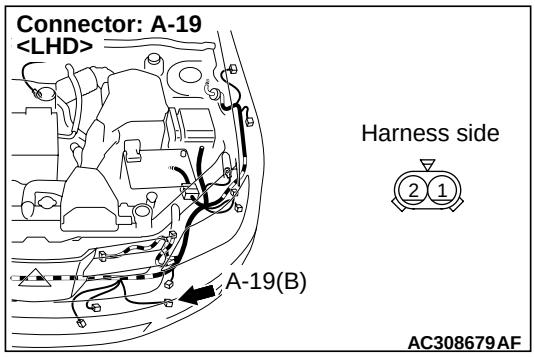

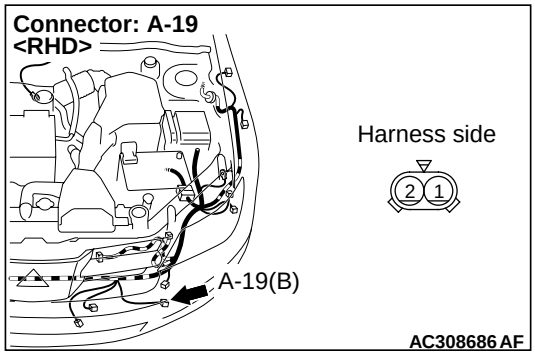

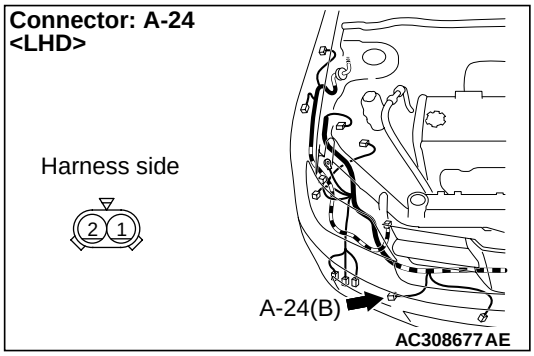

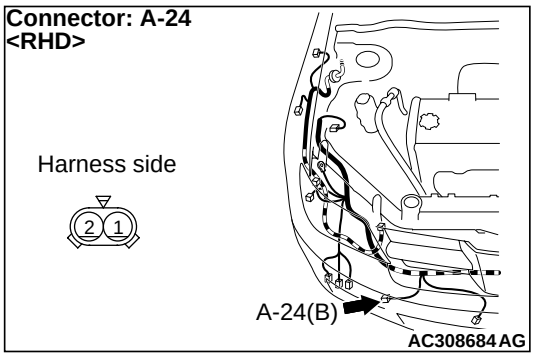

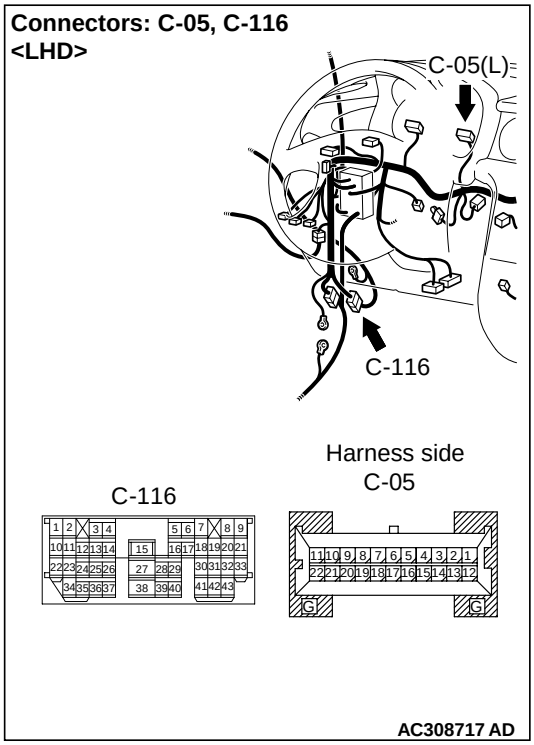

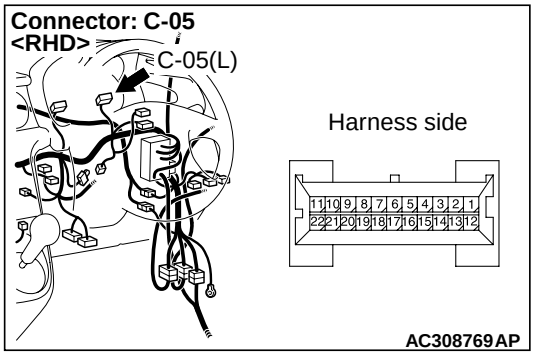

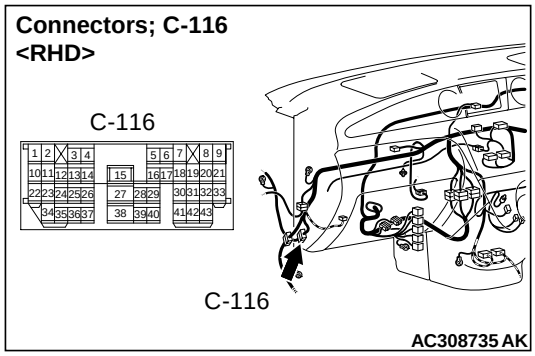

NOTE: Prior to the wiring harness inspection, check intermediate connector C-116 <front fog lamp indicator lamp>, and repair if necessary.

- Check the output lines for open circuit.

Q: Is the check result normal?

YES : Go to Step 7.
NO : Repair the wiring harness.

Step 7. Retest the system.
Check that the fog lamp and the front fog lamp indicator lamp illuminate normally.

Q: Is the check result normal?

The lamps illuminate normally at both high and low beams. : The trouble can be an intermittent malfunction (Refer to GROUP 00 – How to Cope with Intermittent Malfunction P.00-6).

The fog lamps do not illuminate. : Replace the fog lamp(s).

The front fog lamp indicator lamp does not illuminate. : Replace the combination meter.

INSPECTION PROCEDURE L-4: Any of the rear fog lamps does not illuminate.

⚠ CAUTION

Whenever the ECU is replaced, ensure that the input and output signal circuits are normal.

Rear Fog Lamp Circuit <LHD>

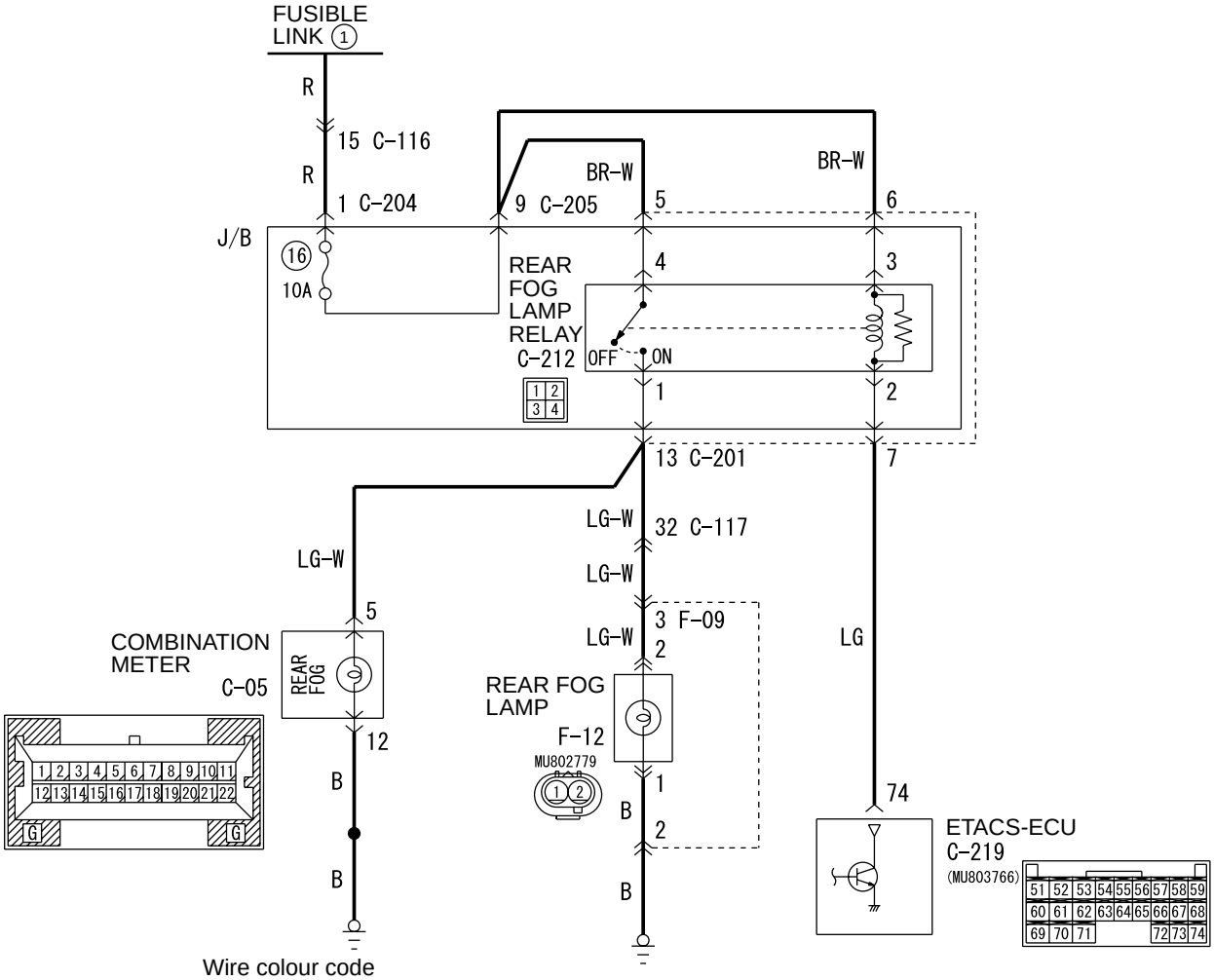

Wire colour code
B : Black LG : Light green G : Green L : Blue W : White Y : Yellow SB : Sky blue
BR : Brown O : Orange GR : Gray R : Red P : Pink V : Violet

W4Z54E31AA

Rear Fog Lamp Circuit <RHD>

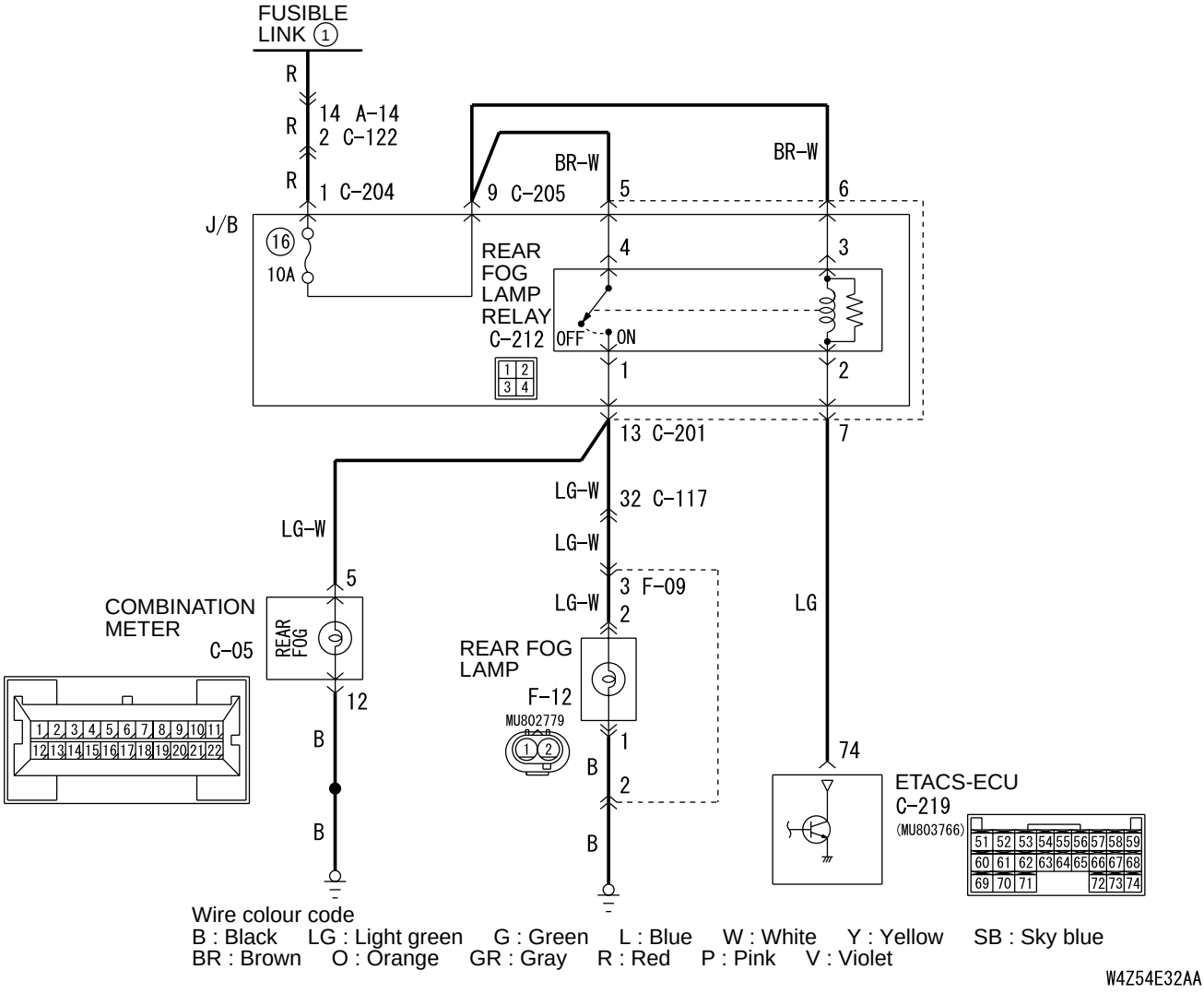

COMMENTS ON TROUBLE SYMPTOM

If any of the rear fog lamps do not illuminate, the wiring harness connector(s), the bulb or the fuse may be defective or burned out.

POSSIBLE CAUSES

- Burned-out rear fog lamp bulb
- Damaged harness wires and connectors

DIAGNOSTIC PROCEDURE

Step 1. Connector check: F-12 rear fog lamp connector or C-05 <rear fog lamp indicator lamp> combination meter connector

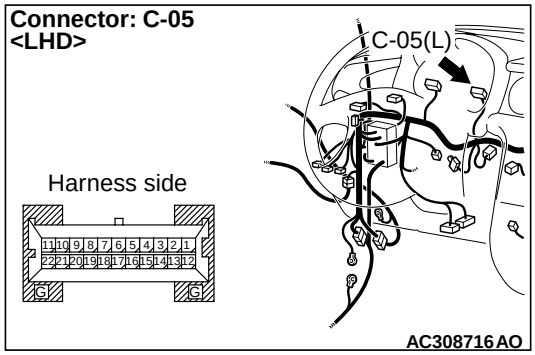

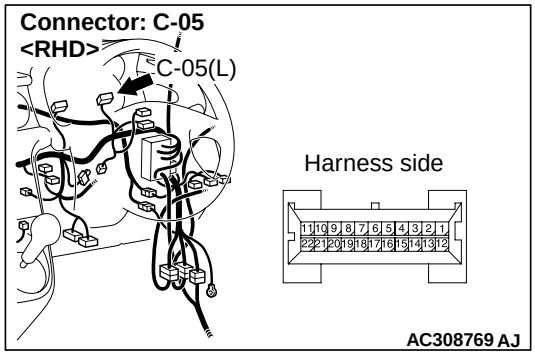

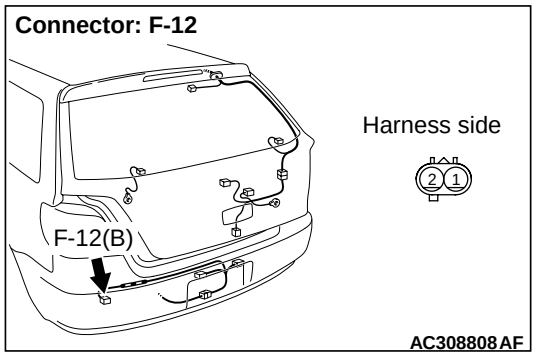

Q: Is the check result normal?
YES : Go to Step 2.
NO : Repair the defective connector.

Step 2. Check the bulbs of the rear fog lamps or the rear fog lamp indicator lamp.
Check the bulb(s) of the defective lamp.

Q: Is the check result normal?
YES : Go to Step 3.
NO : Replace the bulb(s) of the defective lamp.

Step 3. Measure the resistance at the F-12 rear fog lamp connector or C-05 <fog lamp indicator lamp> combination meter connector.

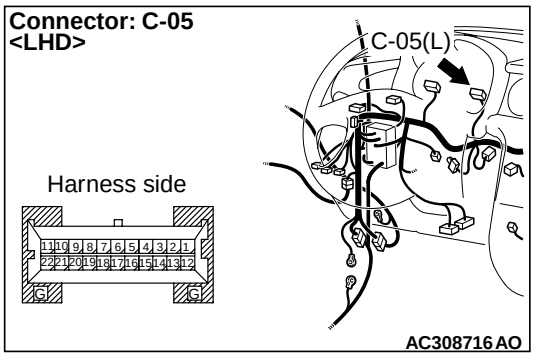

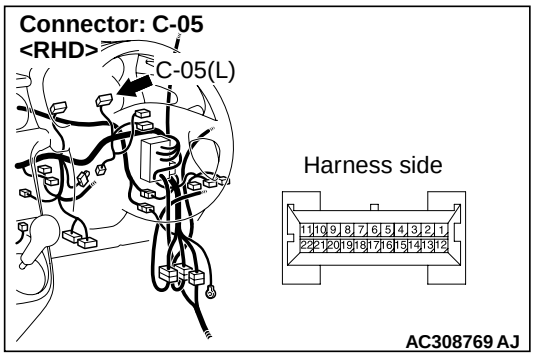

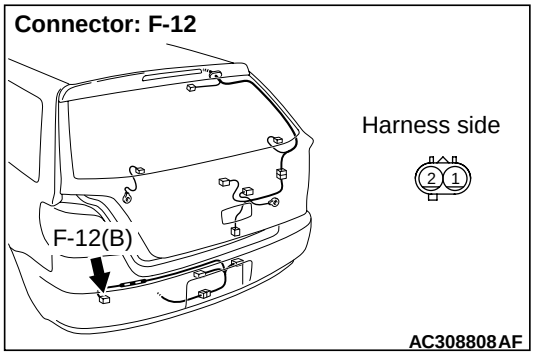

(1) Disconnect the connector, and measure at the wiring harness side.
(2) Check the resistance between the lamp

connector and body earth.

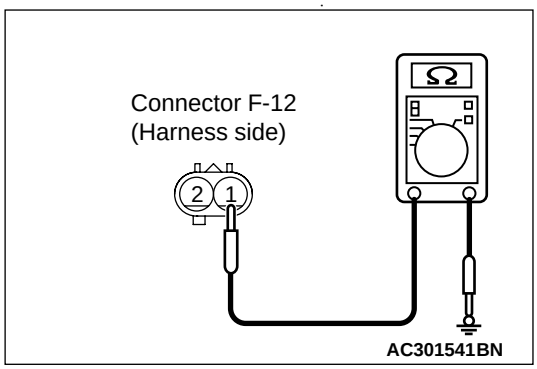

Resistance between F-12 rear fog lamp relay connector terminal No.1 and body earth

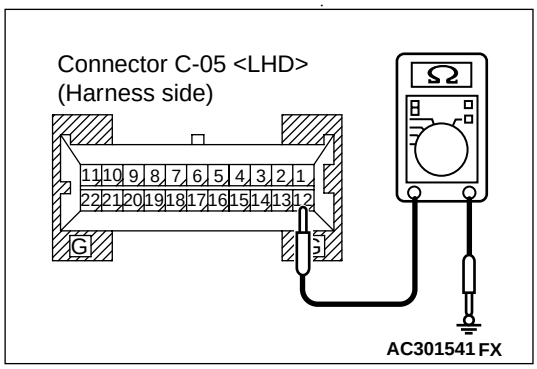

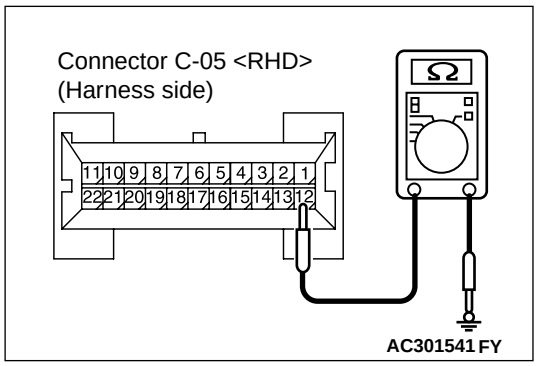

Resistance between C-05 <rear fog lamp indicator lamp> combination meter connector terminal No.12 and body earth

OK: 2 Ω or less

Q: Is the check result normal?
YES : Go to Step 5.
NO : Go to Step 4.

Step 4. Check the wiring harness from F-12 rear fog lamp connector terminal No.1, C-05 <rear fog lamp indicator lamp> combination meter connector terminal No.12 to body earth.

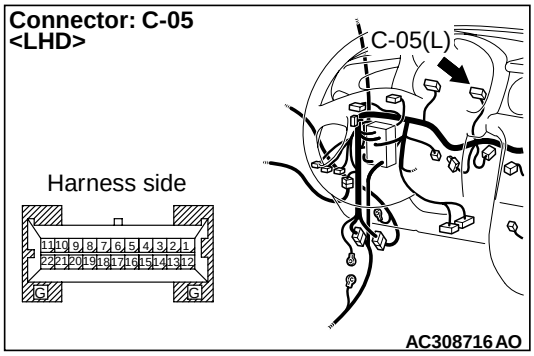

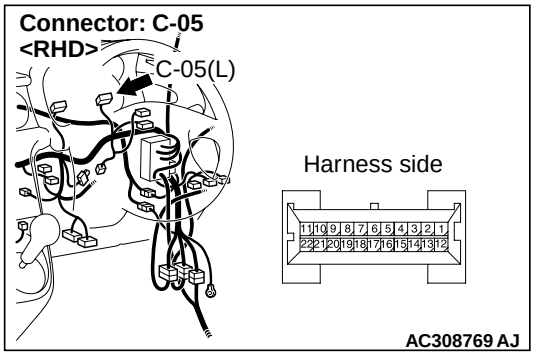

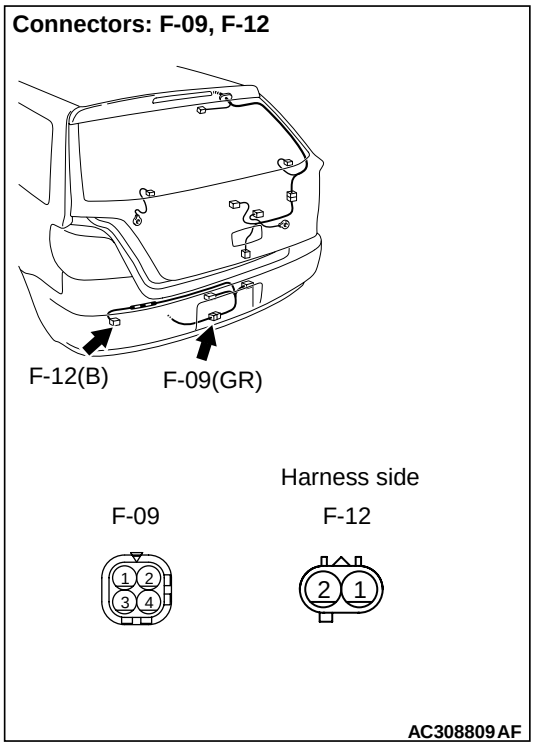

NOTE: Prior to the wiring harness inspection, check intermediate connector F-09 <rear fog lamp>, and repair if necessary.

- Check the earth wires for open circuit.

Q: Is the check result normal?
YES : The trouble can be an intermittent malfunction (Refer to GROUP 00 – How to Cope with Intermittent Malfunction P.00-6).
NO : Repair the wiring harness.

Step 5. Connector check: C-212 rear fog lamp relay connector

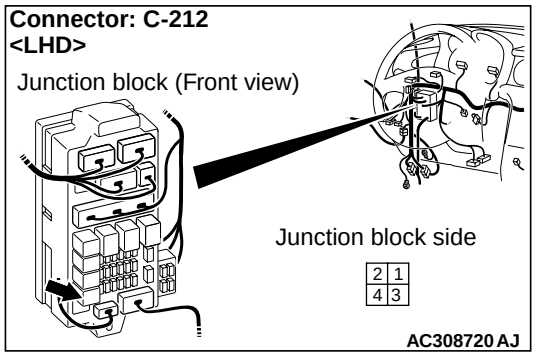

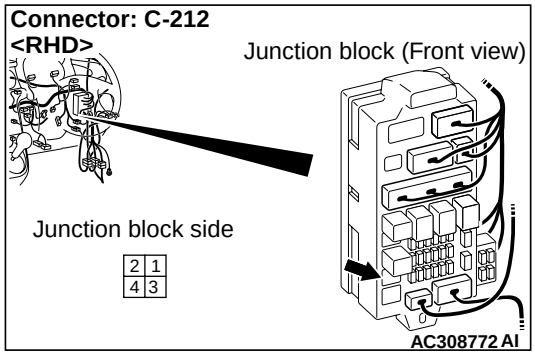

Q: Is the check result normal?
YES : Go to Step 6.
NO : Repair the defective connector.

Step 6. Check the wiring harness from F-12 rear fog lamp connector terminal No.2, C-05 <rear fog lamp indicator lamp> combination meter connector terminal No.5 to C-212 rear fog lamp relay connector terminal No.1.

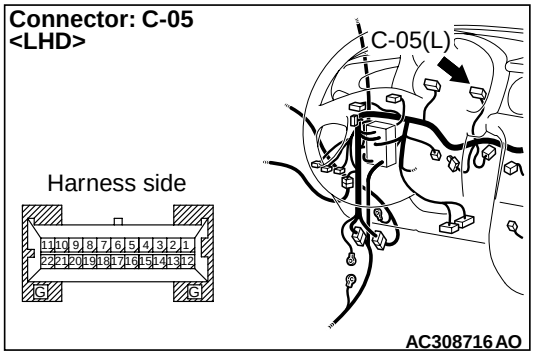

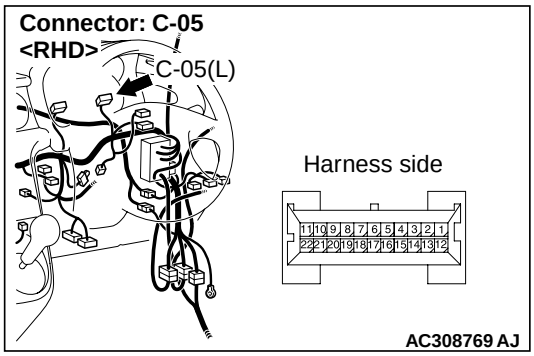

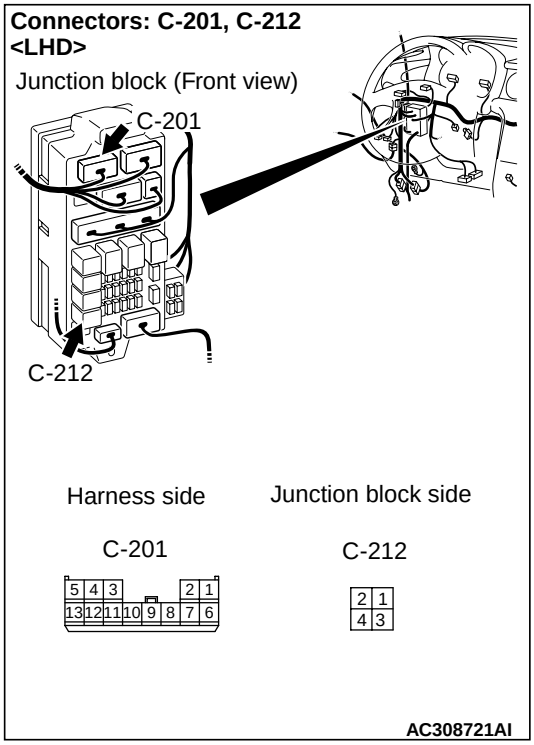

Connectors: C-201, C-212
<RHD>

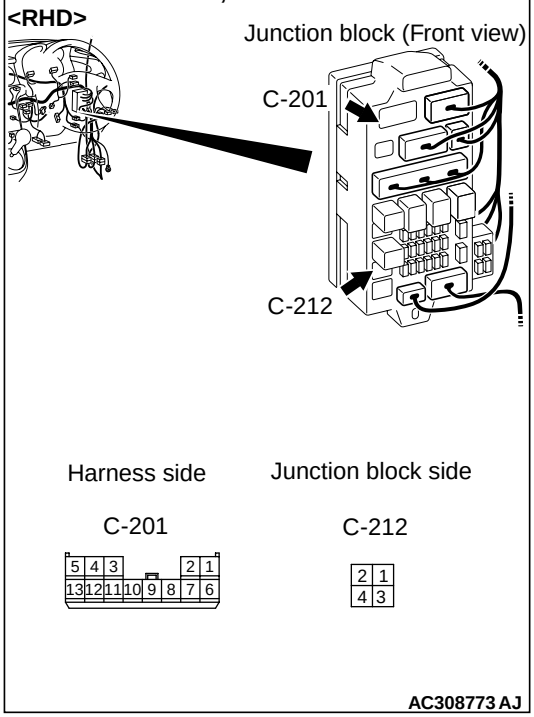

Connectors: C-05, C-117
<LHD>

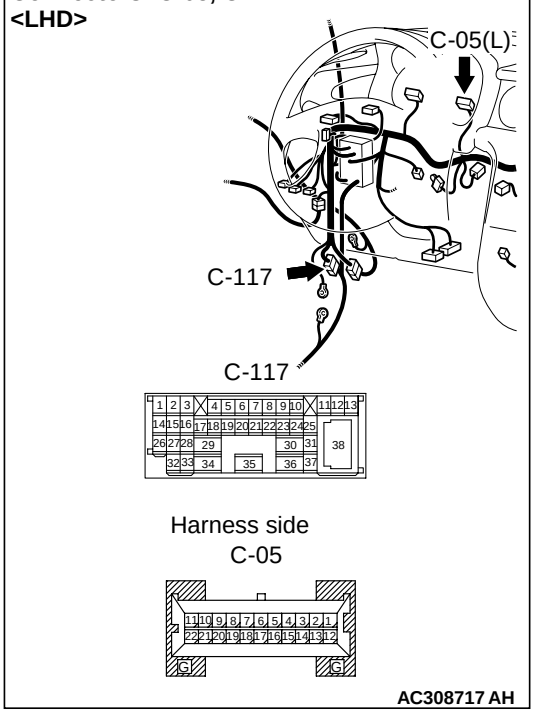

Connector: C-05
<RHD>

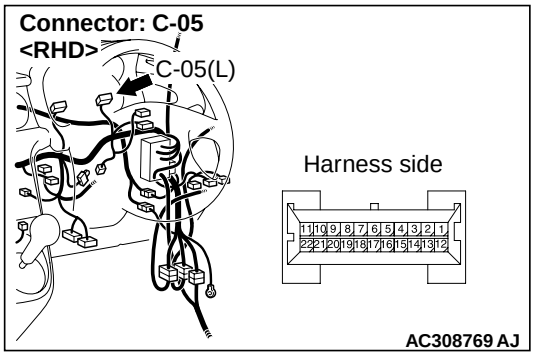

Connectors: F-09, F-12

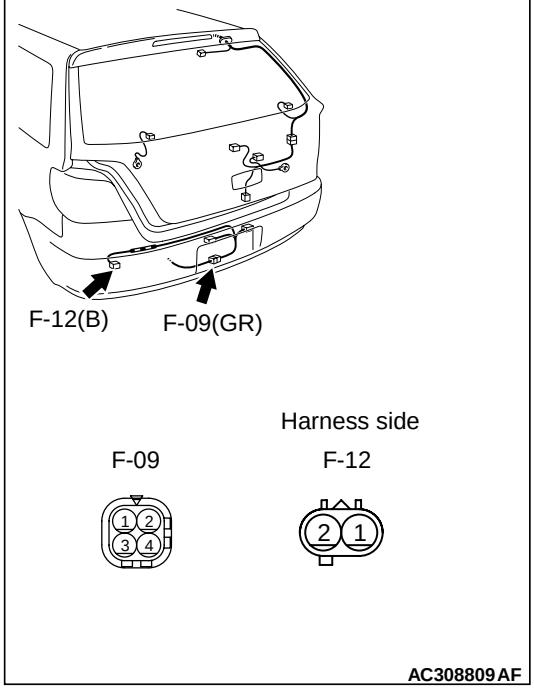

NOTE:

Connectors: C-117
<RHD>

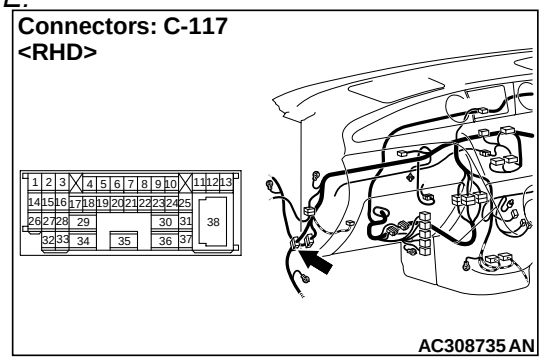

Prior to the wiring harness inspection, check intermediate connector C-117 <rear fog lamp>, F-09 <rear fog lamp> and junction block connector C-201 <rear fog lamp and rear fog lamp indicator lamp>, and repair if necessary.

- Check the output lines for open circuit.

Q: Is the check result normal?
YES : Go to Step 7.
NO : Repair the wiring harness.

Step 7. Retest the system.
Check that the rear fog lamp and the rear fog lamp indicator lamp illuminate normally.

Q: Is the check result normal?

The lamps illuminate normally at both high and low beams. : The trouble can be an intermittent malfunction (Refer to GROUP 00 – How to Cope with Intermittent Malfunction P.00-6).

The rear fog lamps do not illuminate. : Replace the rear fog lamp(s).

The rear fog lamp indicator lamp does not illuminate. : Replace the combination meter.

ROOM LAMP

INSPECTION PROCEDURE M-1: The front or rear room lamp does not illuminate or extinguish normally. <Vehicles without keyless entry system>

⚠ CAUTION

Whenever the ECU is replaced, ensure that the input and output signal circuits are normal.

Room Lamp Circuit

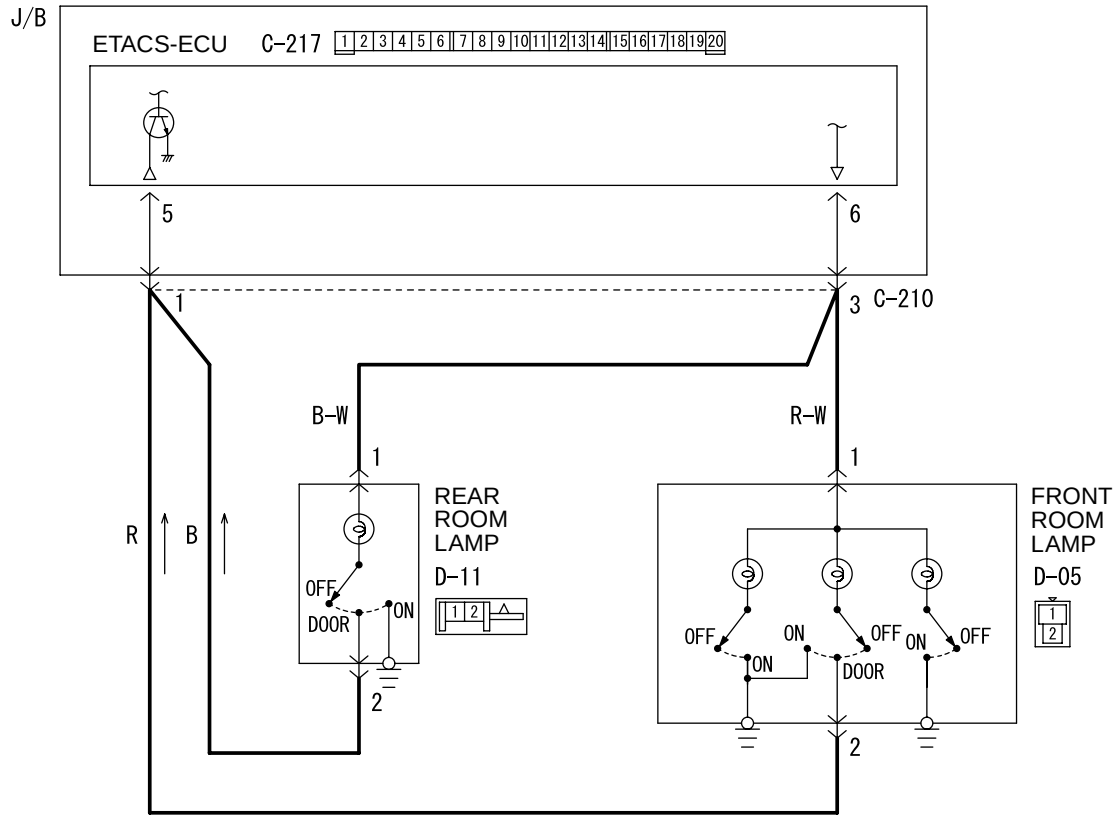

Wire colour code
B : Black LG : Light green G : Green L : Blue W : White Y : Yellow SB : Sky blue
BR : Brown O : Orange GR : Gray R : Red P : Pink V : Violet

W3Z10E21AA

COMMENTS ON TROUBLE SYMPTOM

The ETACS-ECU operates this function in accordance with the input signals below.

- Ignition switch (IG1)
- All of the door switches
- Driver's door lock actuator

If this function does not work normally, these input signal circuit(s) or the ETACS-ECU may be defective.

POSSIBLE CAUSES

- Malfunction of the door switches
- Malfunction of the driver's door lock actuator
- Malfunction of the ETACS-ECU
- Damaged harness wires and connectors

DIAGNOSTIC PROCEDURE

Step 1. Check the power supply circuit.
When the ignition switch is turned to the LOCK (OFF) position, check if the hazard warning lamps illuminate.

Q: Is the check result normal?
YES : Go to Step 2.
NO : Refer to inspection procedure A-2 "Check the ETACS-ECU battery power supply circuit P.54B-52."

Step 2. Pulse check
Check the input signals below, which are related to the front and rear room lamps.

System switch	Check condition
Ignition switch (IG1)	When turned from ACC to ON
All of the door switches	A door is opened when all the doors are closed
Driver's door lock actuator switch	When the driver's door is unlocked or locked

OK: The MUT-II/III sounds or the voltmeter needle fluctuates.

Q: Is the check result normal?
All the signals are received normally. : Go to Step 3.
The ignition switch (IG1) signal is not received. : Refer to inspection procedure N-2 "The ignition switch (IG1) signal is not received P.54B-301."
All the door switch signals are not received. : Refer to inspection procedure N-11 "All the door switch signals are not received <L.H.drive vehicles>P.54B-342 or <R.H.drive vehicles>P.54B-346 ."
The driver's door lock actuator switch signal is not received. : Refer to inspection procedure N-12 "The driver's door lock actuator switch signal is not received <L.H. drive vehicles>P.54B-350 or <R.H. drive vehicles>P.54B-354."

Step 3. Connector check: D-05 front room lamp connector, D-11 rear room lamp connector

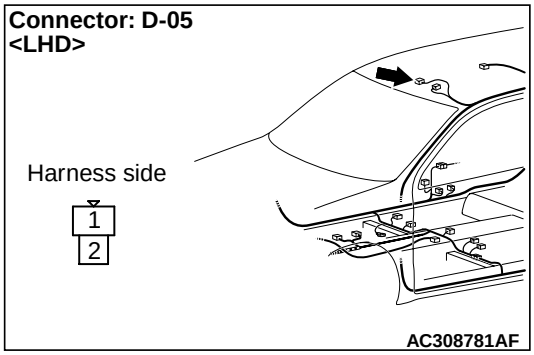

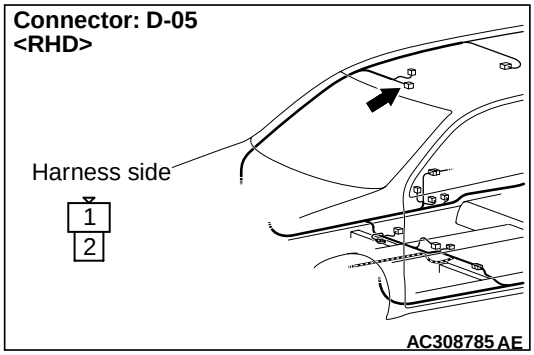

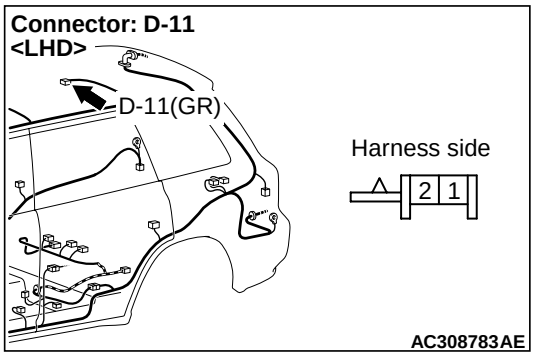

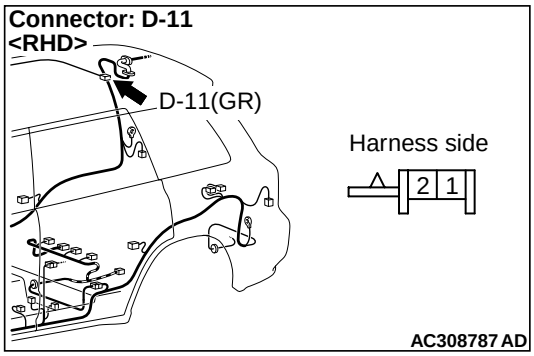

Q: Is the check result normal?
YES : Go to Step 4.
NO : Repair the defective connector.

Step 4. Check the bulbs of the front or rear room lamps.

Check that the front or rear room lamp bulbs are not burned out.

Q: Is the check result normal?

YES : Go to Step 5.

NO : Replace the front or rear room lamp bulb.

Step 5. Connector check: C-217 ETACS-ECU connector

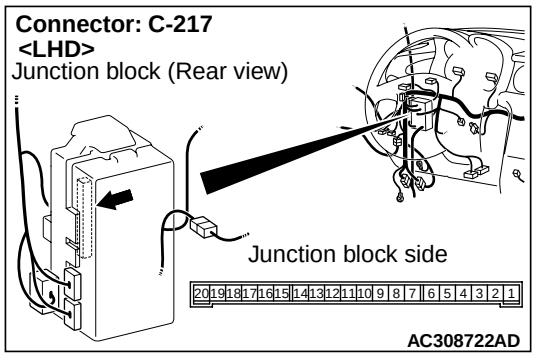

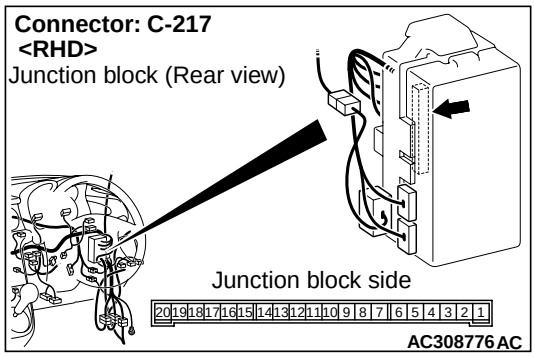

Q: Is the check result normal?

YES : Go to Step 6.

NO : Repair the defective connector.

Step 6. Check the wiring harness from C-217 ETACS-ECU connector terminal Nos. 5 and 6 to D-05 front room lamp connector terminal Nos. 2 and 1.

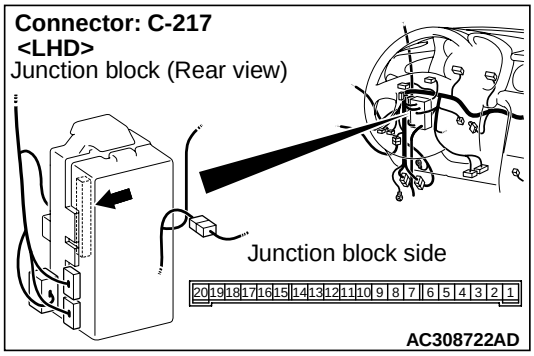

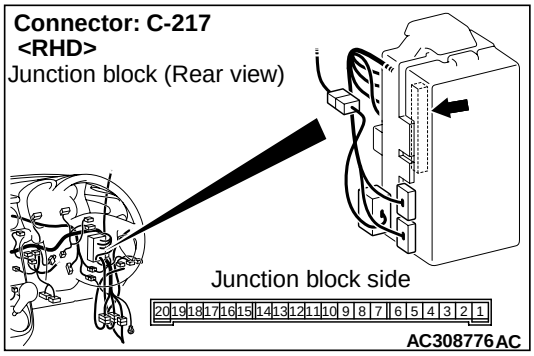

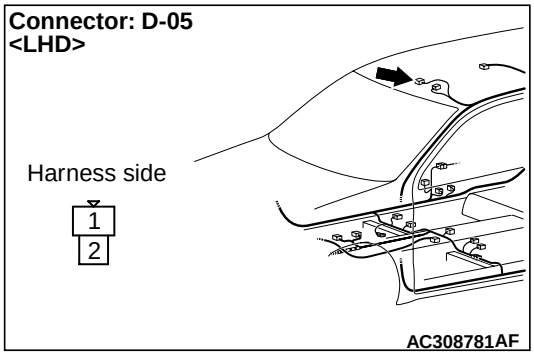

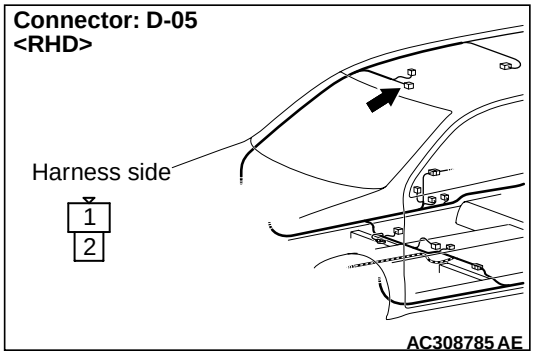

NOTE:

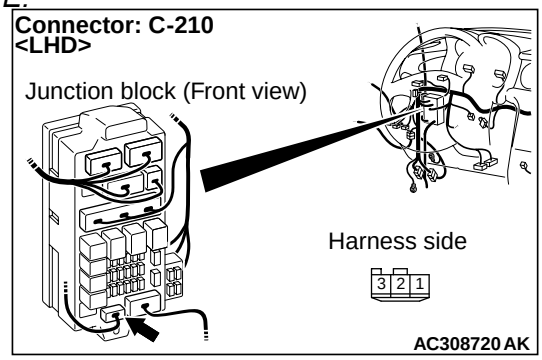

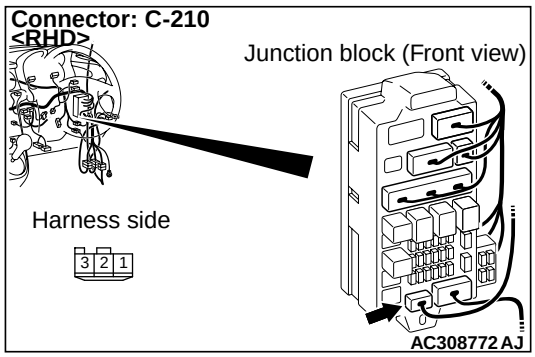

Prior to the wiring harness inspection, check junction block connector C-210, and repair if necessary.

Q: Is the check result normal?
YES : Go to Step 7.
NO : Repair the wiring harness.

Step 7. Check the wiring harness from C-217 ETACS-ECU connector terminal Nos. 5 and 6 to D-11 rear room lamp connector terminal Nos. 2 and 1.

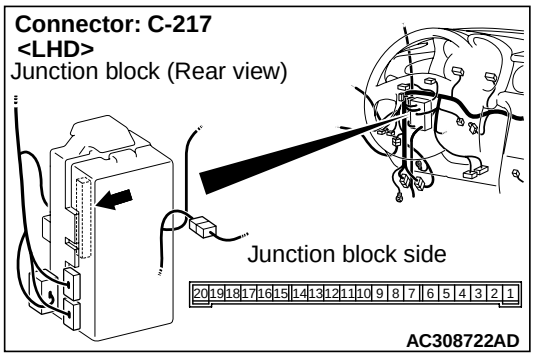

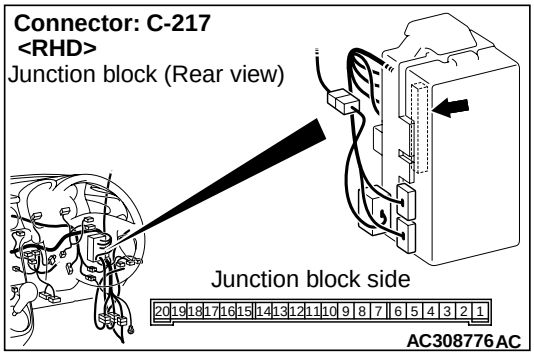

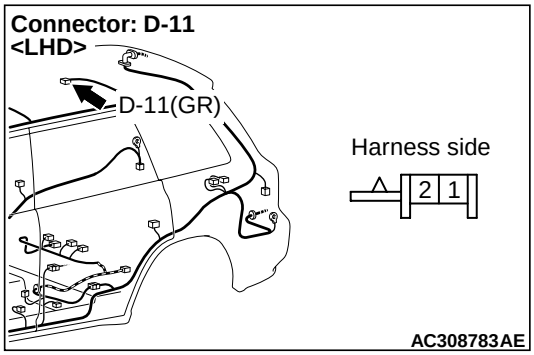

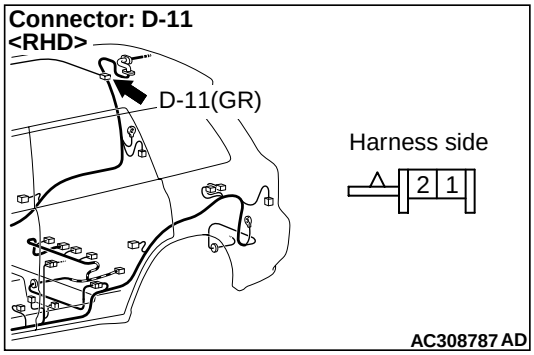

NOTE:

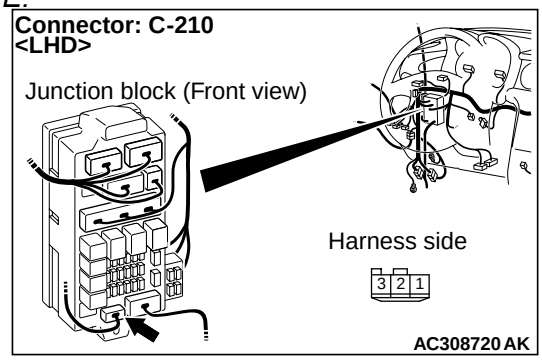

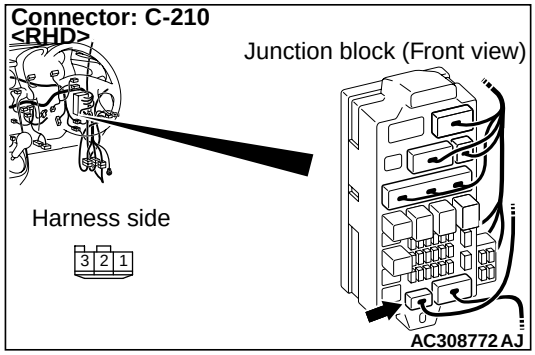

Prior to the wiring harness inspection, check junction block connector C-210, and repair if necessary.

Q: Is the check result normal?
YES : Go to Step 8.
NO : Repair the wiring harness.

Step 8. Retest the system.
Check that the front or rear room lamp illuminates and extinguishes normally.

Q: Is the check result normal?
YES : The trouble can be an intermittent malfunction (Refer to GROUP 00 – How to Cope with Intermittent Malfunction P.00-6).
NO : Replace the ETACS-ECU.

INSPECTION PROCEDURE M-2: The front and rear room lamp do not illuminate or extinguish normally. <Vehicles with keyless entry system>

⚠ CAUTION

Whenever the ECU is replaced, ensure that the input and output signal circuits are normal.

Room Lamp Circuit

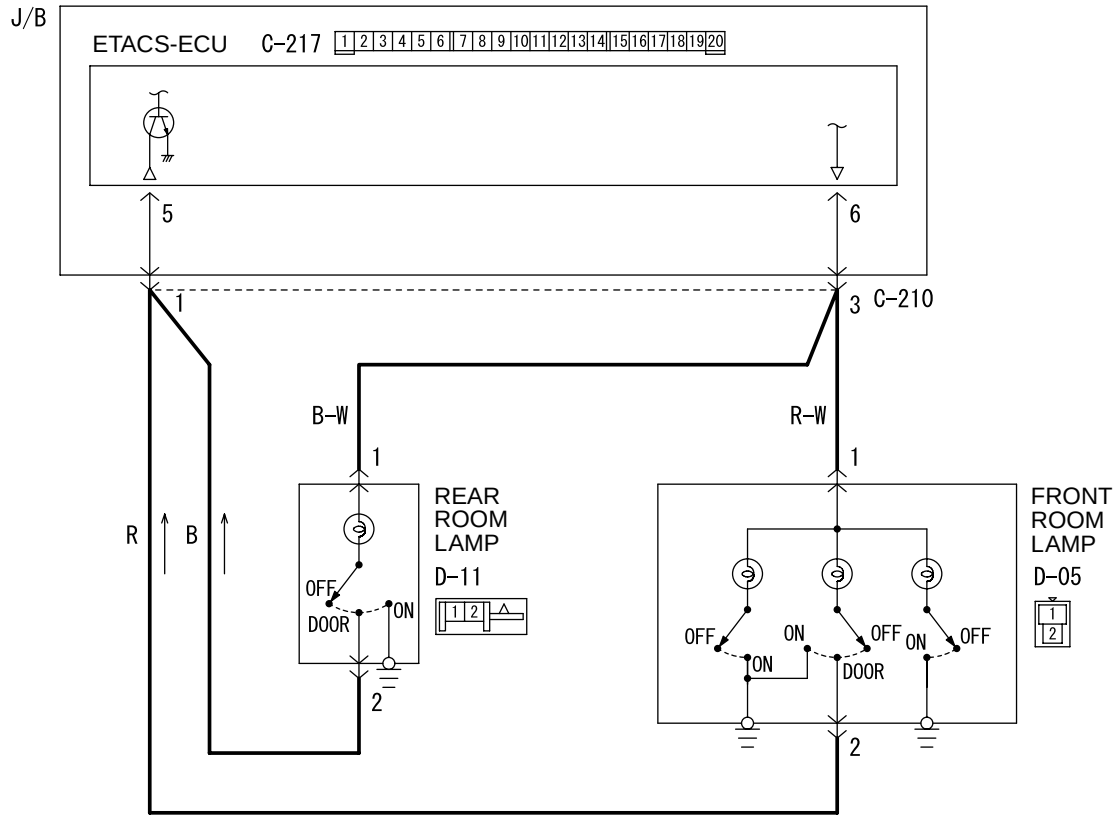

Wire colour code
B : Black LG : Light green G : Green L : Blue W : White Y : Yellow SB : Sky blue
BR : Brown O : Orange GR : Gray R : Red P : Pink V : Violet

COMMENTS ON TROUBLE SYMPTOM

The ETACS-ECU operates this function in accordance with the input signals below.

- Ignition switch (IG1)
- Key reminder switch
- All of the door switches
- Driver's door lock actuator
- Interior lamp loaded signal

If this function does not work normally, these input signal circuit(s), the interior lamp automatic-shutdown function or the ETACS-ECU may be defective. The delay-off setting of this function can be changed by the adjustment function (default setting; 15 seconds).

POSSIBLE CAUSES

- Malfunction of the key reminder switch
- Malfunction of the door switches
- Malfunction of the driver's door lock actuator
- Malfunction of the ETACS-ECU
- Damaged harness wires and connectors

DIAGNOSTIC PROCEDURE

Step 1. Check the adjustment function.
Check that the room lamp delay-off time has been set to other than "0 second" by the adjustment function.

Q: Is the check result normal?
YES : Go to Step 2.
NO : Use the adjustment function to set the room lamp delay-off time to other than "0 second." Refer to P.54B-393.

Step 2. Check the power supply circuit.
When the ignition switch is turned to the LOCK (OFF) position, check if the hazard warning lamps illuminate.

Q: Is the check result normal?
YES : Go to Step 3.
NO : Refer to inspection procedure A-2 "Check the ETACS-ECU battery power supply circuit" P.54B-52.

Step 3. Pulse check
Check the input signals below, which are related to the front and rear room lamps.

System switch	Check condition
Ignition switch (IG1)	When turned from ACC to ON
All of the door switches	A door is opened when all the doors are closed
Driver's door lock actuator switch	When the driver's door is unlocked or locked
Interior lamp loaded signal	When a load is applied through multi-purpose fuse No.22

OK: The MUT-II/III sounds or the voltmeter needle fluctuates.

Q: Is the check result normal?
All the signals are received normally. : Go to Step 4.
The ignition switch (IG1) signal is not received. : Refer to inspection procedure N-2 "The ignition switch (IG1) signal is not received P.54B-301."
All the door switch signals are not received. : Refer to inspection procedure N-11 "All the door switch signals are not received <L.H. drive vehicles>P.54B-342 or <R.H. drive vehicles>P.54B-346 ."
The driver's door lock actuator switch signal is not received. : Refer to inspection procedure N-12 "The driver's door lock actuator switch signal is not received <L.H. drive vehicles>P.54B-350 or <R.H. drive vehicles>P.54B-354 ."
Interior lamp loaded signal is not detected. : Refer to inspection procedure N-17 "Interior lamp loaded signal is not detected P.54B-375."

Step 4. Connector check: D-05 front room lamp connector, D-11 rear room lamp connector

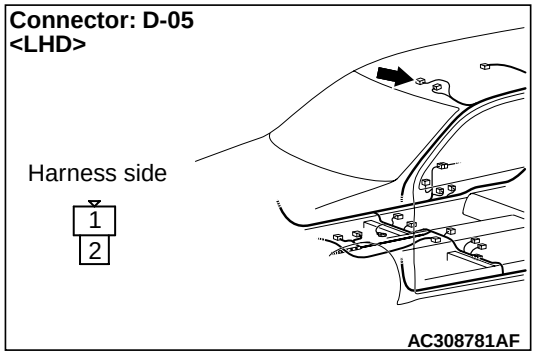

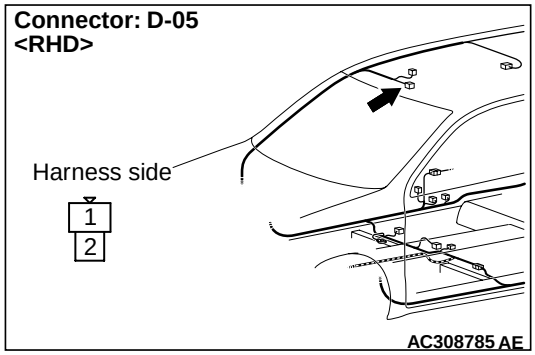

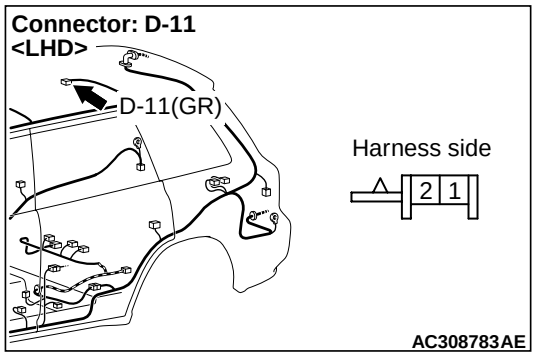

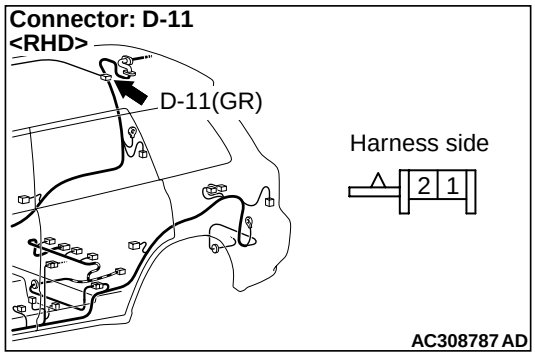

Q: Is the check result normal?

YES : Go to Step 5.
NO : Repair the defective connector.

Step 5. Check the bulbs of the front or rear room lamps.

Check that the front or rear room lamp bulbs are not burned out.

Q: Is the check result normal?

YES : Go to Step 6.
NO : Replace the front or rear room lamp bulb.

Step 6. Connector check: C-217 ETACS-ECU connector

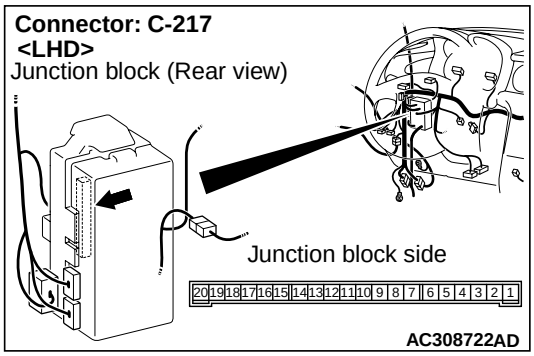

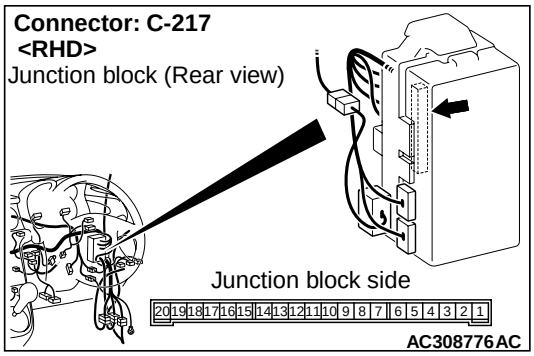

Q: Is the check result normal?

YES : Go to Step 7.
NO : Repair the defective connector.

Step 7. Check the wiring harness from C-217 ETACS-ECU connector terminal Nos. 5 and 6 to D-05 front room lamp connector terminal Nos. 2 and 1.

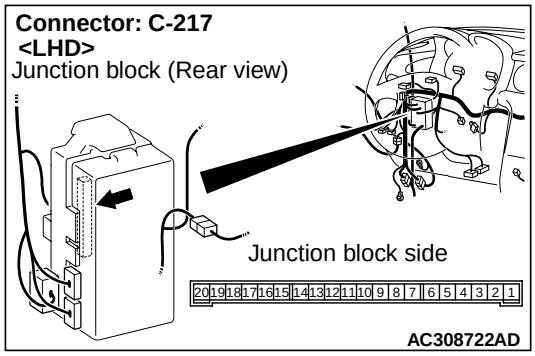

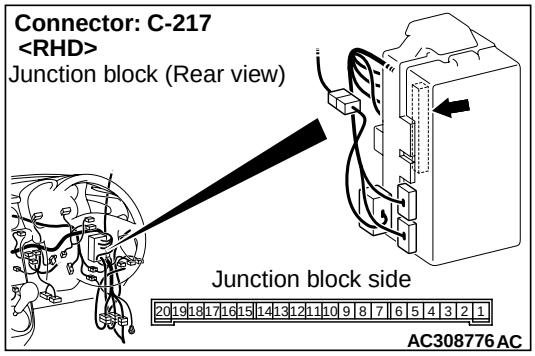

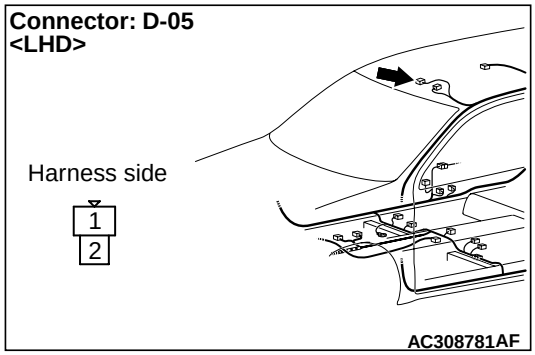

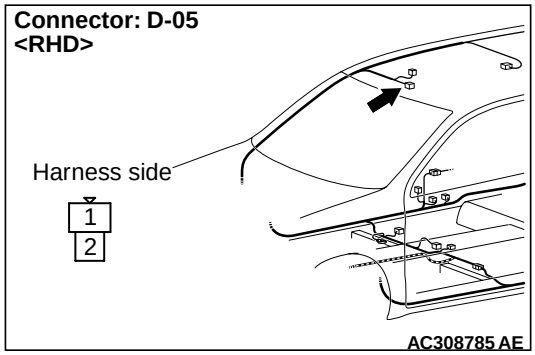

NOTE:

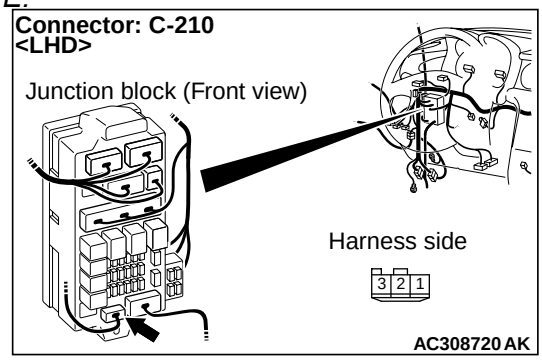

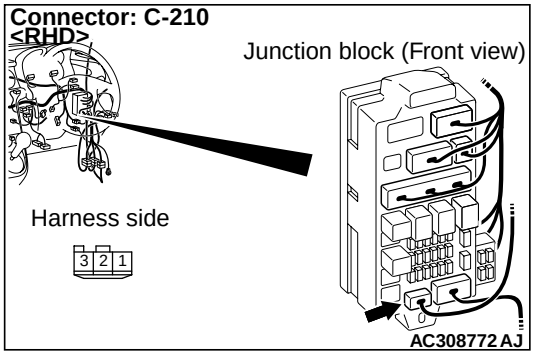

Prior to the wiring harness inspection, check junction block connector C-210, and repair if necessary.

Q: Is the check result normal?
YES : Go to Step 8.
NO : Repair the wiring harness.

Step 8. Check the wiring harness from C-217 ETACS-ECU connector terminal Nos. 5 and 6 to D-11 rear room lamp connector terminal Nos. 2 and 1.

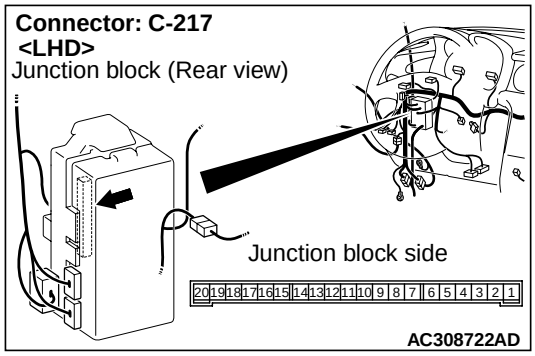

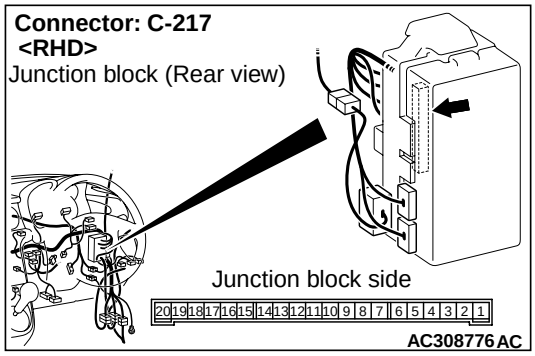

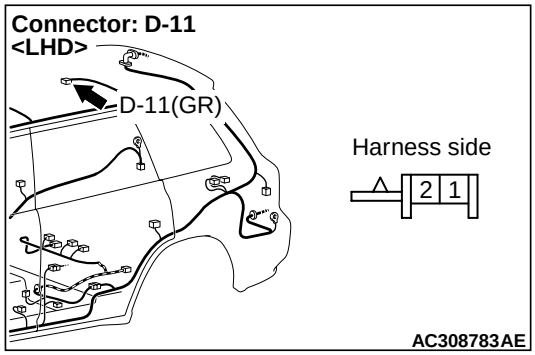

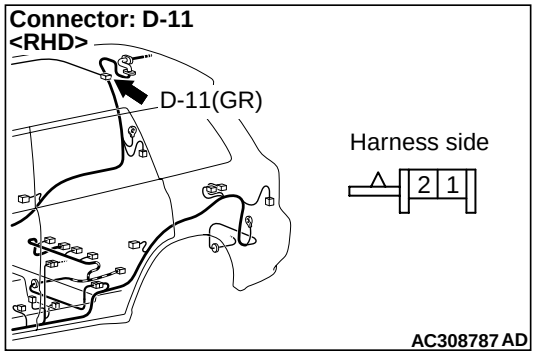

NOTE:

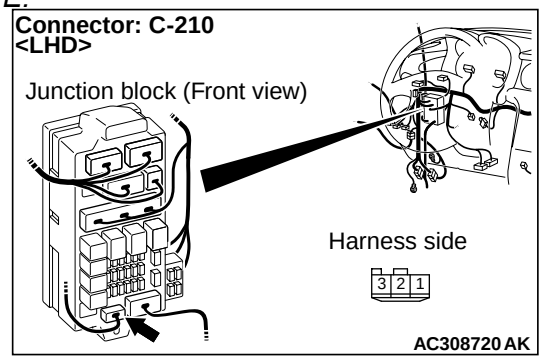

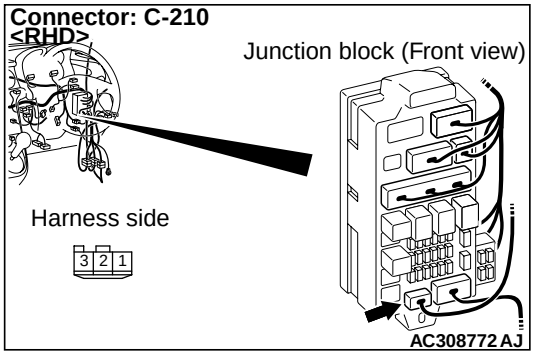

Prior to the wiring harness inspection, check junction block connector C-210, and repair if necessary.

Q: Is the check result normal?
YES : Go to Step 9.
NO : Repair the wiring harness.

Step 9. Retest the system.
Check that the front or rear room lamp illuminates and extinguishes normally.

Q: Is the check result normal?
YES : The trouble can be an intermittent malfunction (Refer to GROUP 00 – How to Cope with Intermittent Malfunction P.00-6).
NO : Replace the ETACS-ECU.

INSPECTION PROCEDURE M-3: Interior lamp automatic shutoff function does not work normally. <Vehicles with keyless entry system>

⚠ CAUTION

Whenever the ECU is replaced, ensure that the input and output signal circuits are normal.

Interior Lamp Automatic Shut-off Function Circuit

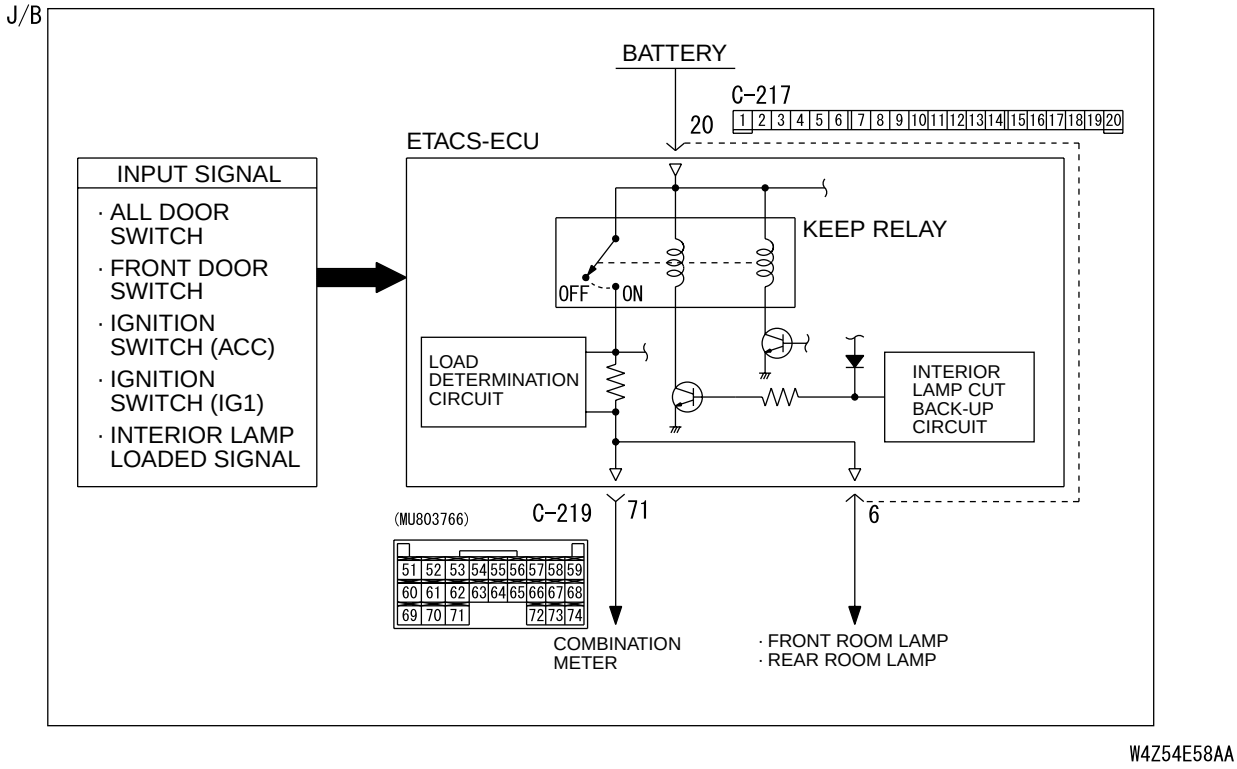

COMMENTS ON TROUBLE SYMPTOM

The ETACS-ECU operates the interior lamp automatic-shutdown function in accordance with the input signals below.

- Ignition switch (ACC)
- Ignition switch (IG1)
- Driver's door switch
- All of the door switches
- Interior lamp loaded signal

If this function does not work normally, these input signal circuit(s) or the ETACS-ECU may be defective. Note that this function can be disabled/enabled by the adjustment function (default setting; enabled).

POSSIBLE CAUSES

- Malfunction of the door switches
- Malfunction of the room lamp
- Malfunction of the ETACS-ECU
- Damaged harness wires and connectors

DIAGNOSTIC PROCEDURE

Step 1. Check the adjustment function.

Check that the interior lamp automatic-shutdown function has been enabled by using the adjustment function.

Q: Is the check result normal?

YES : Go to Step 2.

NO : Enable the interior lamp automatic-shutdown function by using the adjustment function. Refer to P.54B-393.

Step 2. Check the power supply circuit.
When the ignition switch is turned to the LOCK (OFF) position, check if the hazard warning lamps illuminate.

Q: Is the check result normal?
YES : Go to Step 3.
NO : Refer to inspection procedure A-2 "Check the ETACS-ECU battery power supply circuit P.54B-52."

Step 3. Pulse check
Check the input signals below, which are related to the front and rear dome lamps.

System switch	Check condition
Ignition switch (ACC)	When turned from the LOCK (OFF) position to the ACC position
Ignition switch (IG1)	When turned from ACC to ON
Driver's door switch	Driver's door is opened while all the other doors are closed.
All of the door switches	A door is opened when all the doors are closed
Interior lamp loaded signal	When a load is applied through multi-purpose fuse No.22

OK: The MUT-II/III sounds or the voltmeter needle fluctuates.

Q: Is the check result normal?
All the signals are received normally. : Go to Step 4.
The ignition switch (ACC) signal is not received. : Refer to inspection procedure N-1 "The ignition switch (ACC) signal is not received P.54B-298."
The ignition switch (IG1) signal is not received. : Refer to inspection procedure N-2 "The ignition switch (IG1) signal is not received P.54B-301."
The driver's door switch signal is not received. : Refer to inspection procedure N-4 "The front door switch signal is not received <L.H. drive vehicles>P.54B-315 or <R.H. drive vehicles>P.54B-317 ."
All the door switch signals are not received. : Refer to inspection procedure N-11 "All the door switch signals are not received <L.H. drive vehicles>P.54B-342 or <R.H. drive vehicles>P.54B-346 ."
Interior lamp loaded signal is not detected : Refer to inspection procedure N-17 "Interior lamp loaded signal is not detected P.54B-375."

Step 4. Retest the system.
Check that the interior lamp automatic-shutdown function works normally.

Q: Is the check result normal?
YES : The trouble can be an intermittent malfunction (Refer to GROUP 00 – How to Cope with Intermittent Malfunction P.00-6).
NO : Replace the ETACS-ECU.

INSPECTION PROCEDURE M-4: The door-ajar warning lamp does not illuminate/extinguish normally.

⚠ CAUTION

Whenever the ECU is replaced, ensure that the input and output signal circuits are normal.

Door Ajar Indicator Lamp Circuit

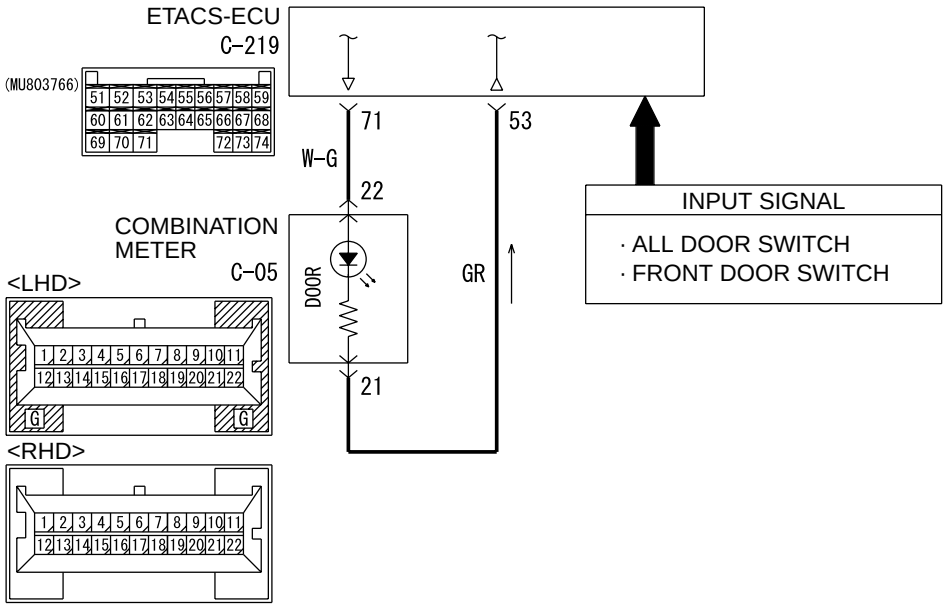

Wire colour code
B : Black LG : Light green G : Green L : Blue W : White Y : Yellow SB : Sky blue
BR : Brown O : Orange GR : Gray R : Red P : Pink V : Violet

W4Z54E33AA

COMMENTS ON TROUBLE SYMPTOM

If the door-ajar warning lamp does not work normally, the input signal circuits from all the door switches or the ETACS-ECU may be defective.

POSSIBLE CAUSES

- All the door switches are defective.
- Malfunction of the ETACS-ECU
- Damaged harness wires and connectors

DIAGNOSTIC PROCEDURE

Step 1. Check the operation of the room lamp.

Q: Does the room lamp illuminate/extinguish?
YES : Go to Step 2.
NO : Refer to inspection procedure M-1 "The front or rear room lamp does not illuminate/extinguish <vehicles without keyless entry system>P.54B-282 ." Or refer to inspection procedure M-2 "The front or rear room lamp does not illuminate/extinguish <vehicles with keyless entry system>P.54B-287 ."

Step 2. Pulse check

Check the input signals below, which are related to the door-ajar warning lamp.

System switch	Check condition
Driver's door switch	Driver's door is opened while all the other doors are closed.
All of the door switches	A door is opened when all the doors are closed

OK: The MUT-II/III sounds or the voltmeter needle fluctuates.

Q: Is the check result normal?
All the signals are received normally. : Go to Step 3.
The driver's door switch signal is not received. : Refer to inspection procedure N-4 "The front door switch signal is not received <L.H. drive vehicles>P.54B-315 or <R.H. drive vehicles>P.54B-317 ."
All the door switch signals are not received. : Refer to inspection procedure N-11 "All the door switch signals are not received <L.H. drive vehicles>P.54B-342 or <R.H. drive vehicles>P.54B-346 ."

Step 3. Connector check: C-05 combination meter connector

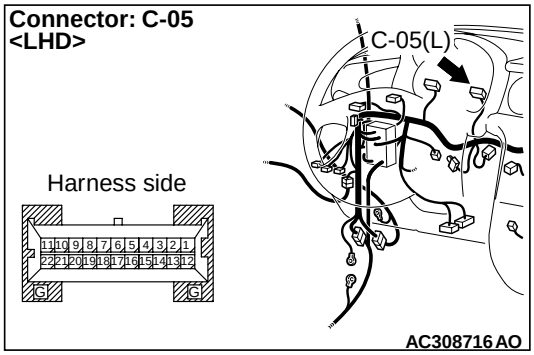

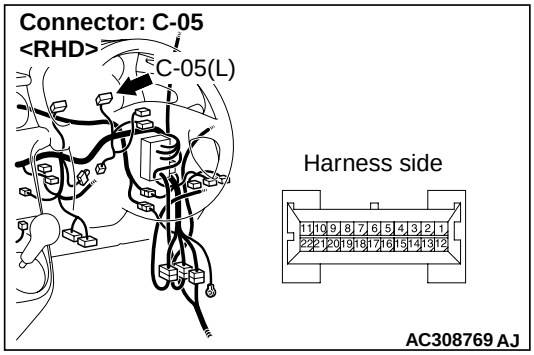

Q: Is the check result normal?
YES : Go to Step 4.
NO : Repair the defective connector.

Step 4. Check the door-ajar warning lamp bulb.

Check the door-ajar warning lamp bulb.

Q: Is the check result normal?
YES : Go to Step 5.
NO : Replace the door-ajar warning lamp bulb.

Step 5. Connector check: C-219 ETACS-ECU connector

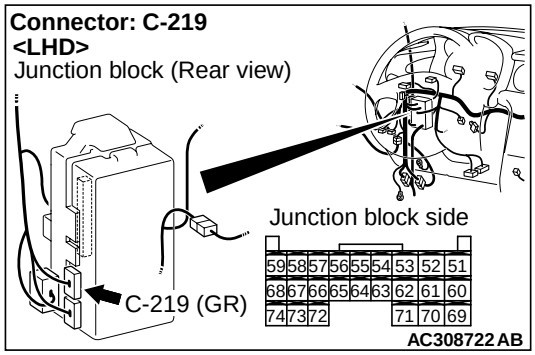

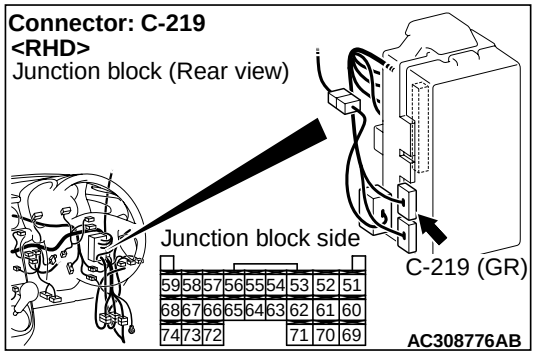

Q: Is the check result normal?
YES : Go to Step 6.
NO : Repair the defective connector.

Step 6. Check the wiring harness from C-219 ETACS-ECU connector terminal Nos. 53 and 71 to C-05 combination meter connector terminal Nos. 21 and 22.

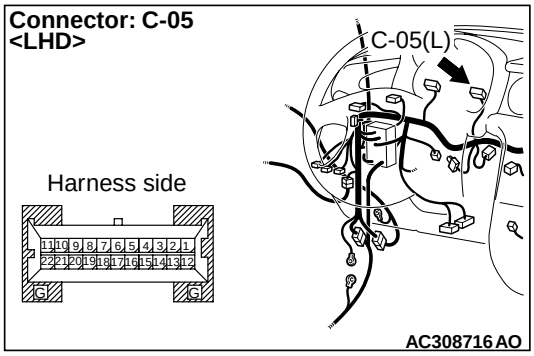

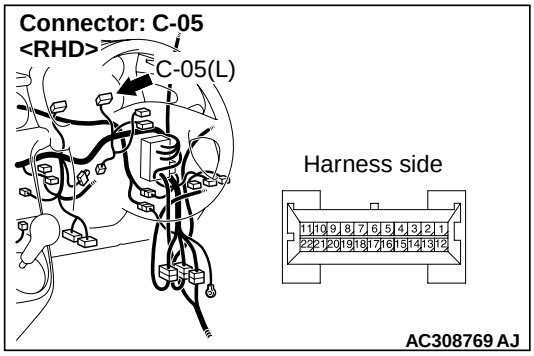

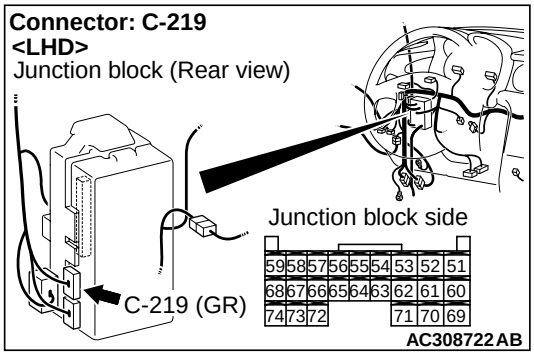

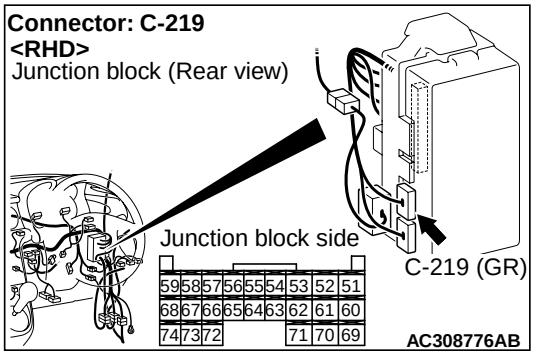

Q: Is the check result normal?
YES : Go to Step 7.
NO : Repair the wiring harness.

Step 7. Retest the system.

Replace the ETACS-ECU, and then check that the door-ajar warning lamp illuminates/extinguishes normally.

(1) Replace the ETACS-ECU.

(2) Check that the door-ajar warning lamp illuminates/extinguishes normally.

Q: Is the check result normal?

YES : The trouble can be an intermittent malfunction (Refer to GROUP 00 – How to Cope with Intermittent Malfunction P.00-6).

NO : Replace the combination meter.

INPUT SIGNAL PROCEDURES

INSPECTION PROCEDURE N-1: The ignition switch (ACC) signal is not received.

⚠ CAUTION

Whenever the ECU is replaced, ensure that the input signal circuit is normal.

Ignition Switch (ACC) Input Circuit

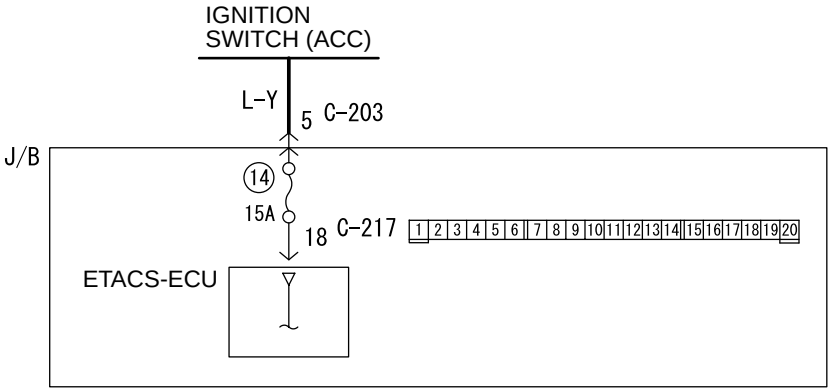

Wire colour code
B : Black LG : Light green G : Green L : Blue W : White Y : Yellow SB : Sky blue
BR : Brown O : Orange GR : Gray R : Red P : Pink V : Violet

W3Z10E25AA

COMMENTS ON TROUBLE SYMPTOM

Input signal from the ignition switch (ACC) is used to operate the functions below. If the signal is abnormal, these functions will not work normally.

- Windshield wiper and washer
- Rear wiper and washer
- Interior lamp automatic-shutdown function

POSSIBLE CAUSES

- Malfunction of the ETACS-ECU
- Damaged harness wires and connectors

DIAGNOSTIC PROCEDURE

Step 1. Connector check: C-217 ETACS-ECU connector

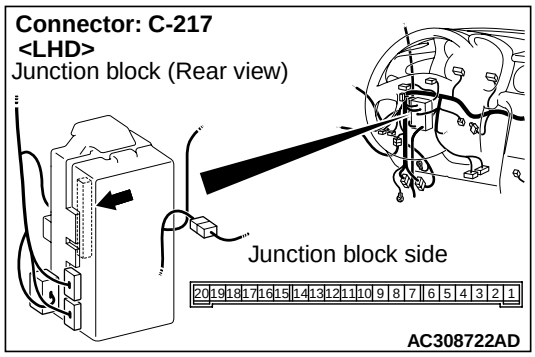

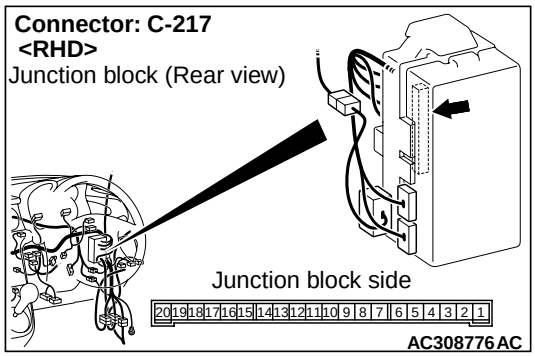

Q: Is the check result normal?
YES : Go to Step 2.
NO : Repair the defective connector.

Step 2. Measure the voltage at the C-217 ETACS-ECU connector.

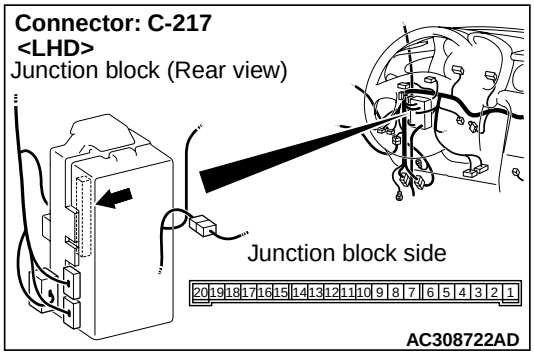

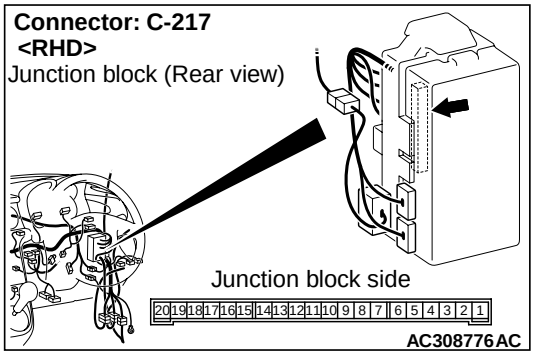

(1) Remove the ETACS-ECU, and measure at the junction block side.
(2) Ignition switch: ACC position

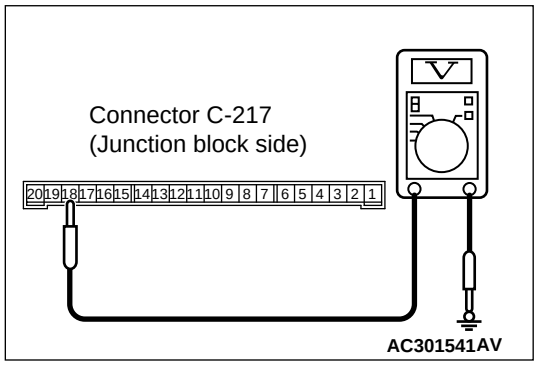

(3) Voltage between C-217 ETACS-ECU connector terminal No.18 and body earth

OK: System voltage

Q: Is the check result normal?
YES : Go to Step 4.
NO : Go to Step 3.

Step 3. Check the wiring harness between C-217 ETACS-ECU connector terminal No.18 and the ignition switch (ACC).

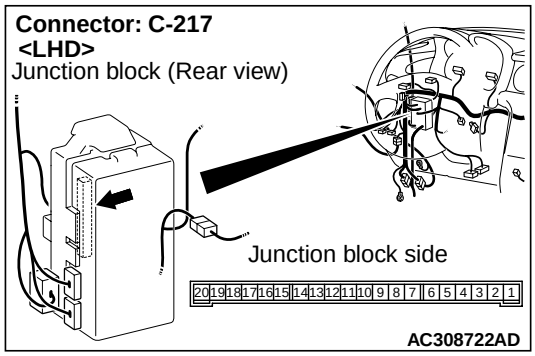

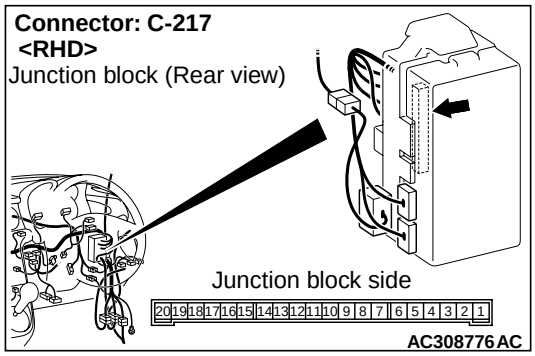

NOTE:

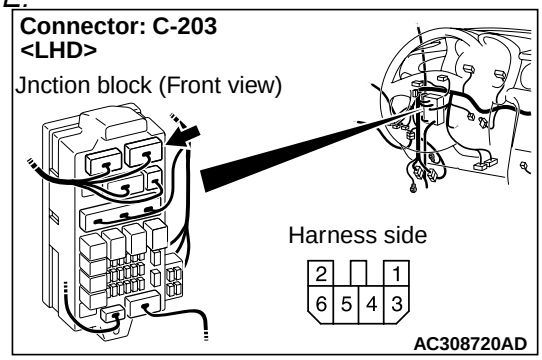

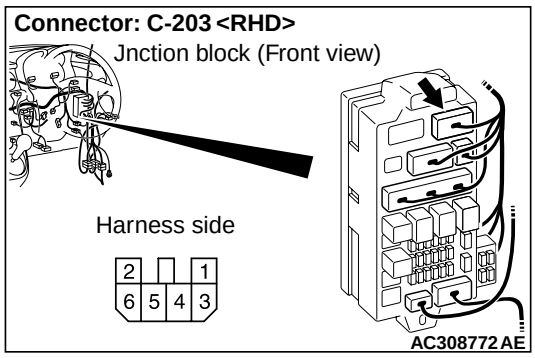

Prior to the wiring harness inspection, check junction block connector C-203, and repair if necessary.

- Check the power supply line for open circuit.

Q: Is the check result normal?

YES : The trouble can be an intermittent malfunction (Refer to GROUP 00 – How to Cope with Intermittent Malfunction P.00-6).

NO : Repair the wiring harness.

Step 4. Retest the system.

Check that the ignition switch (ACC) signal is received normally.

Q: Is the check result normal?

YES : The trouble can be an intermittent malfunction (Refer to GROUP 00 – How to Cope with Intermittent Malfunction P.00-6).

NO : Replace the ETACS-ECU.

INSPECTION PROCEDURE N-2: The ignition switch (IG1) signal is not received.

⚠ CAUTION

Whenever the ECU is replaced, ensure that the input signal circuit is normal.

Ignition Switch (IG1) Input Circuit

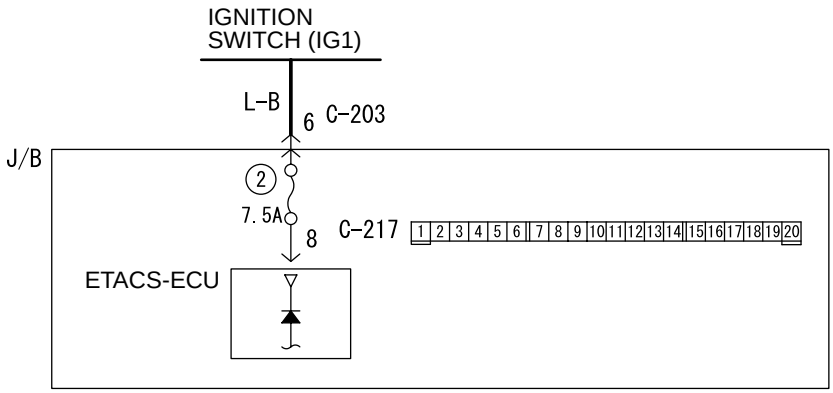

Wire colour code
B : Black LG : Light green G : Green L : Blue W : White Y : Yellow SB : Sky blue
BR : Brown O : Orange GR : Gray R : Red P : Pink V : Violet

W3Z10E24AA

COMMENTS ON TROUBLE SYMPTOM

Input signal from the ignition switch (IG1) is used to operate the functions below. If the signal is abnormal, these functions will not work normally.

- Lamp reminder function
- Ignition key cylinder illumination lamp
- Headlamp automatic-shutdown function
- Turn signal lamp
- Room lamps

POSSIBLE CAUSES

- Malfunction of the ETACS-ECU
- Damaged harness wires and connectors

DIAGNOSTIC PROCEDURE

Step 1. Connector check: C-217 ETACS-ECU connector

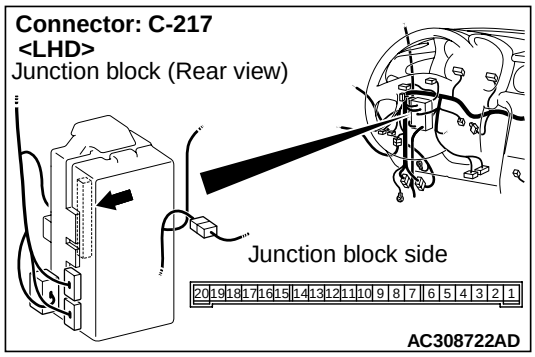

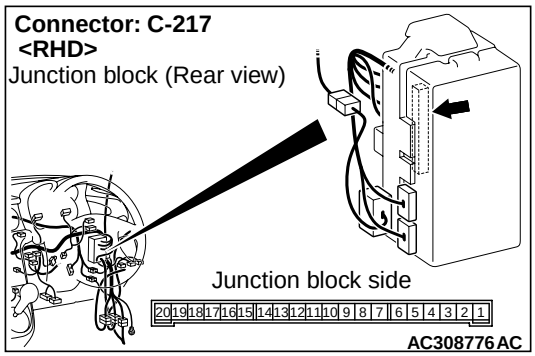

Q: Is the check result normal?
YES : Go to Step 2.
NO : Repair the defective connector.

Step 2. Measure the voltage at the C-217 ETACS-ECU connector.

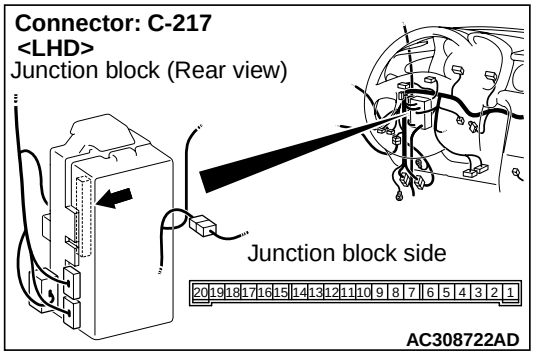

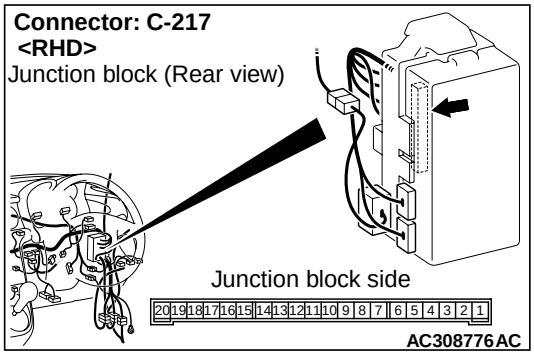

(1) Remove the ETACS-ECU, and measure at the junction block side.
(2) Ignition switch: ON position

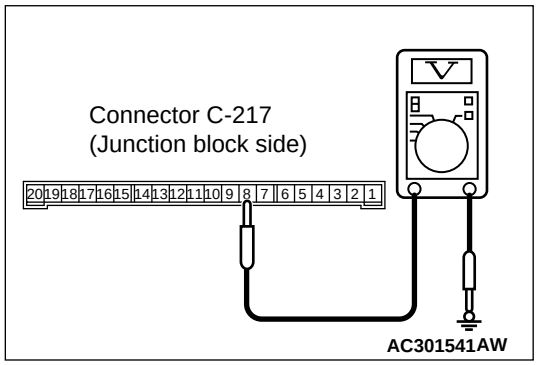

(3) Voltage between C-217 ETACS-ECU connector terminal No.8 and body earth

OK: System voltage

Q: Is the check result normal?
YES : Go to Step 4.
NO : Go to Step 3.

Step 3. Check the wiring harness between C-217 ETACS-ECU connector terminal No.8 and the ignition switch (IG1).

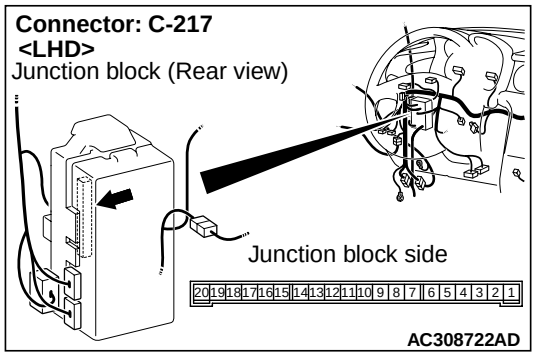

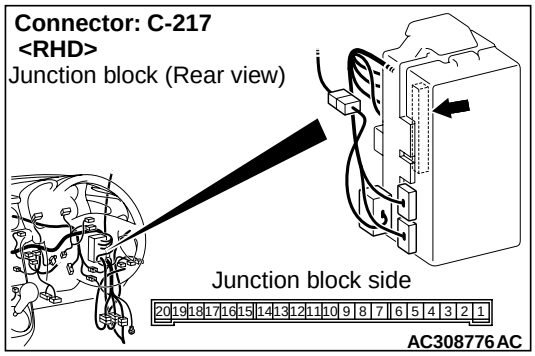

NOTE:

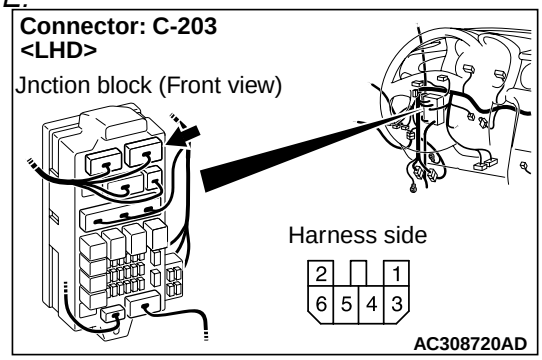

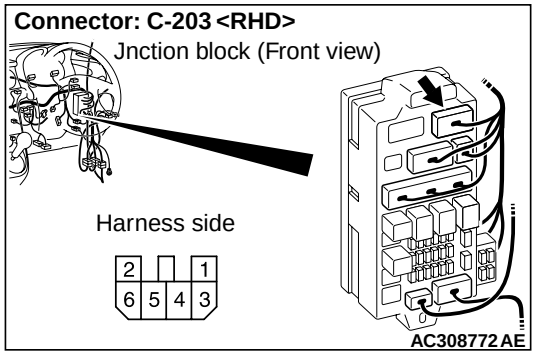

Prior to the wiring harness inspection, check junction block connector C-203, and repair if necessary.

- Check the power supply line for open circuit.

Q: Is the check result normal?

YES : The trouble can be an intermittent malfunction (Refer to GROUP 00 – How to Cope with Intermittent Malfunction P.00-6).

NO : Repair the wiring harness.

Step 4. Retest the system.

Check that the ignition switch (IG1) signal is received normally.

Q: Is the check result normal?

YES : The trouble can be an intermittent malfunction (Refer to GROUP 00 – How to Cope with Intermittent Malfunction P.00-6).

NO : Replace the ETACS-ECU.

INSPECTION PROCEDURE N-3: The back-up lamp switch signal is not received. <M/T>

⚠ CAUTION

Whenever the ECU is replaced, ensure that the input signal circuit is normal.

Back-up Lamp Switch Input Circuit

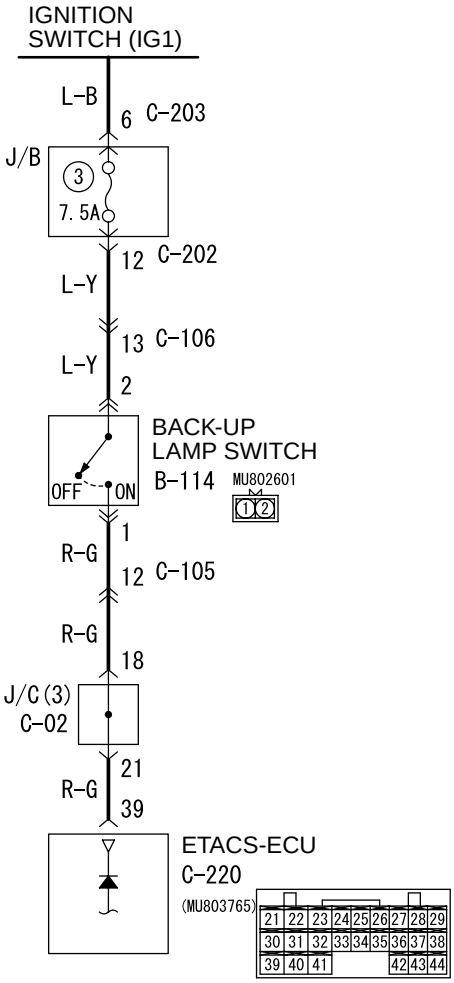

Wire colour code
B : Black LG : Light green G : Green L : Blue W : White Y : Yellow SB : Sky blue
BR : Brown O : Orange GR : Gray R : Red P : Pink V : Violet

W3Z10E26AA

COMMENTS ON TROUBLE SYMPTOM

Input signal from the back-up lamp switch is used to operate the rear wiper. If the signal is abnormal, the rear wiper will not work normally.

POSSIBLE CAUSES

- Malfunction of the back-up lamp switch
- Malfunction of the ETACS-ECU
- Damaged harness wires and connectors

DIAGNOSTIC PROCEDURE

Step 1. Connector check: B-114 <2000 or 2400-L.H. drive vehicles> back-up lamp switch connector and C-220 ETACS-ECU connector

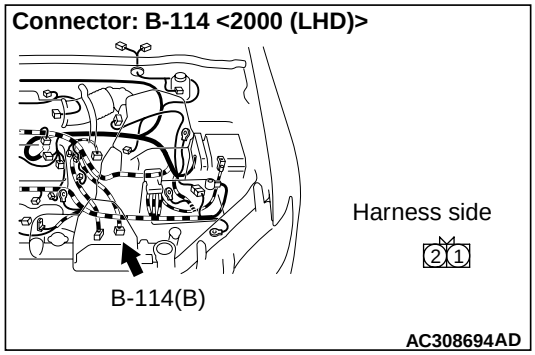

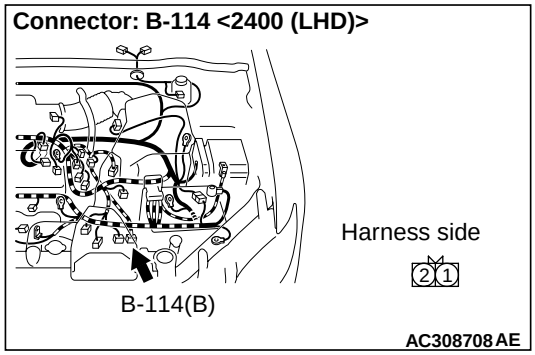

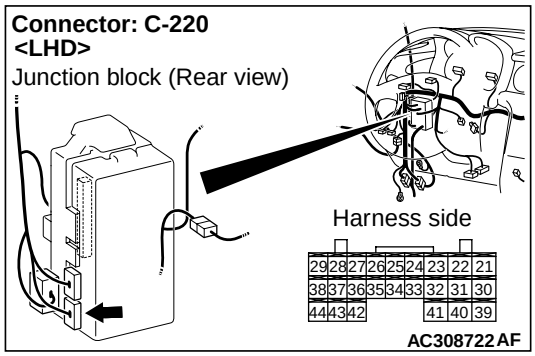

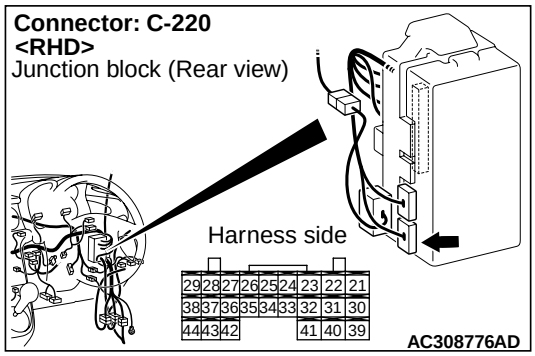

Q: Is the check result normal?
YES : Go to Step 2.
NO : Repair the defective connector.

Step 2. Check the back-up lamp switch

Check the back-up lamp switch (Refer to GROUP 22B – Transmission P.22B-24).

Q: Is the check result normal?
YES : Go to Step 3.
NO : Replace the inhibitor switch.

Step 3. Measure the voltage at the C-220 ETACS-ECU connector.

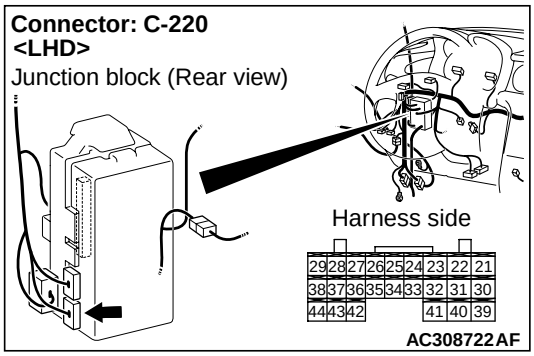

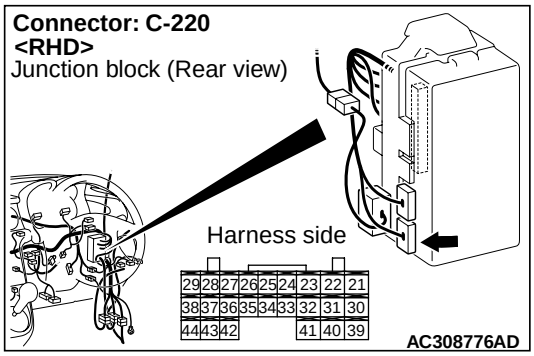

(1) Disconnect the connector, and measure at the wiring harness side.
(2) Ignition switch: ON
(3) Shift position: R position

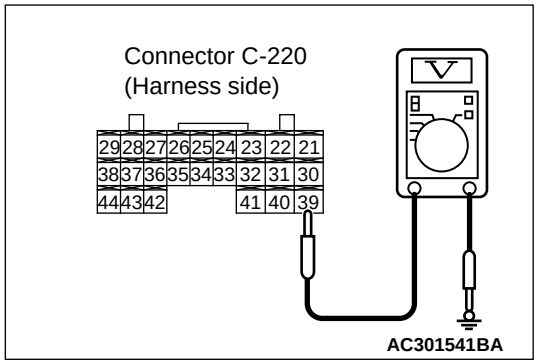

(4) Voltage between C-220 ETACS-ECU connector terminal No.39 and body earth

OK: System voltage

Q: Is the check result normal?
YES : Replace the ETACS-ECU.
NO : Go to Step 4.

Step 4. Measure the voltage at the B-114 <2000 or 2400- L.H. drive vehicles> back-up lamp switch connector.

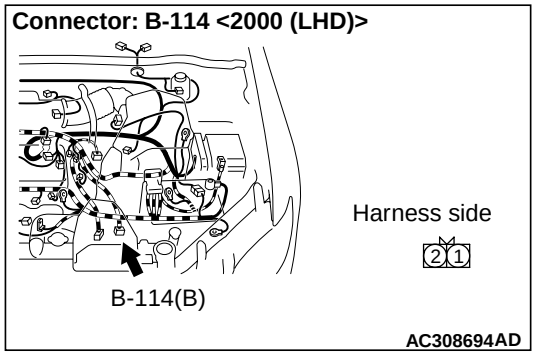

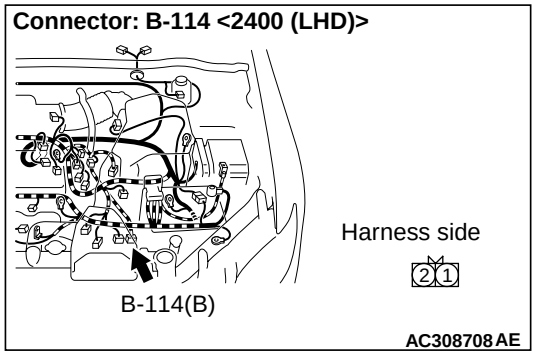

(1) Disconnect the connector, and measure at the wiring harness side.
(2) Ignition switch: ON

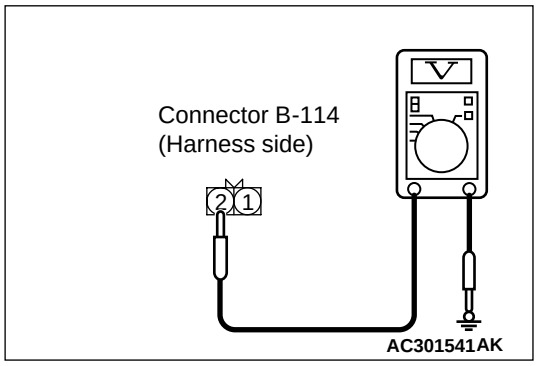

(3) Voltage between B-114 back-up lamp switch connector terminal No.2 and body earth

OK: System voltage

Q: Is the check result normal?
YES : Go to Step 5.
NO : Go to Step 6.

Step 5. Check the wiring harness between B-114 <2000 or 2400- L.H. drive vehicles> back-up lamp switch connector terminal No.1 and C-220 ETACS-ECU connector terminal No.39.

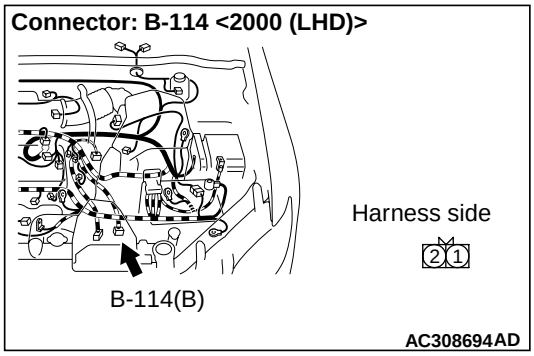

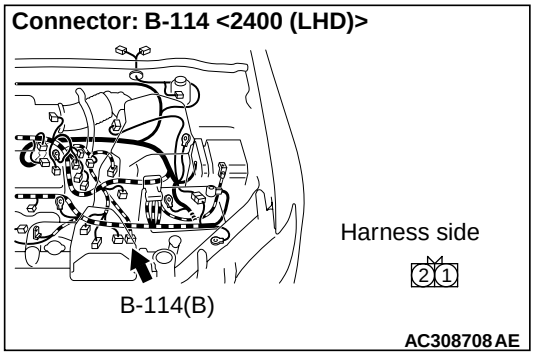

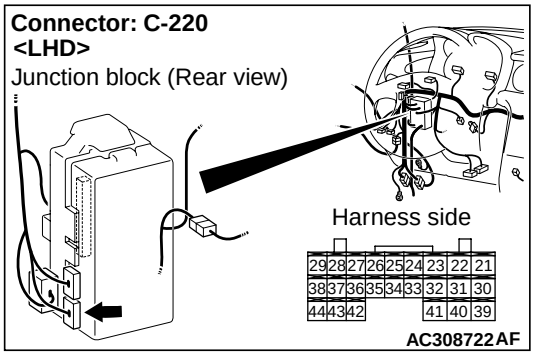

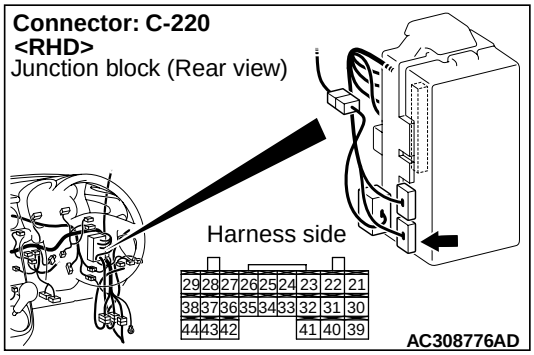

NOTE:

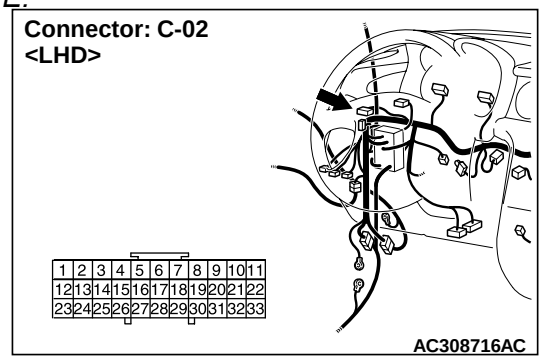

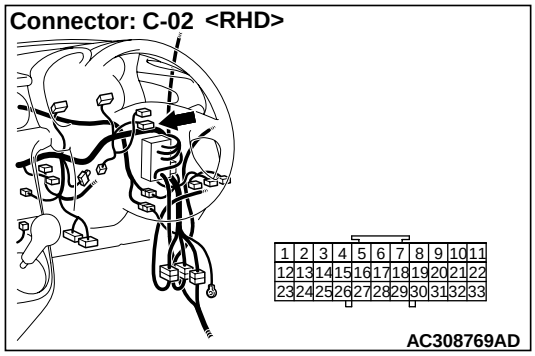

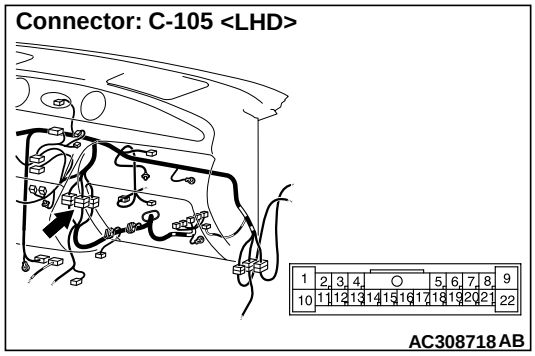

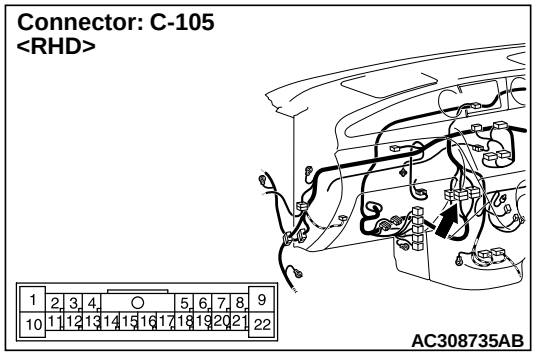

Prior to the wiring harness inspection, check joint connector C-02 and intermediate connector C-105, and repair if necessary.

- Check the input line for open circuit.

Q: Is the check result normal?

YES : Go to Step 7.
NO : Repair the wiring harness.

Step 6. Check the wiring harness between B-114 <2000 or 2400- L.H. drive vehicles> back-up lamp switch connector terminal No.2 and the ignition switch (IG1).

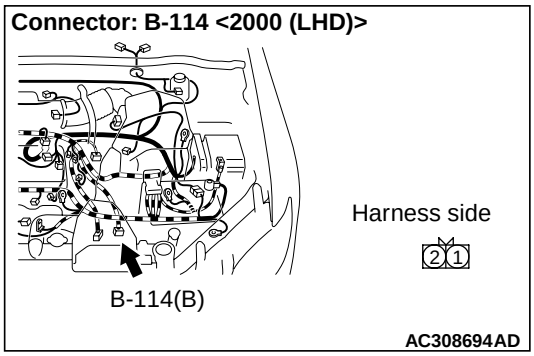

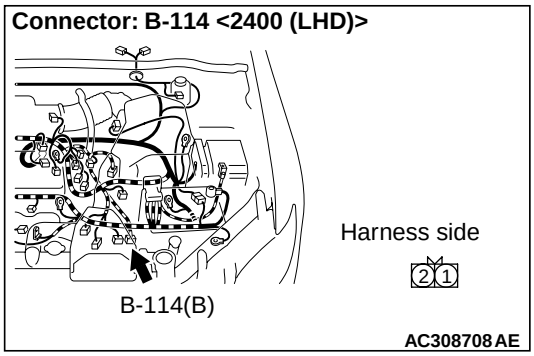

NOTE:

Connector: C-106 <RHD>

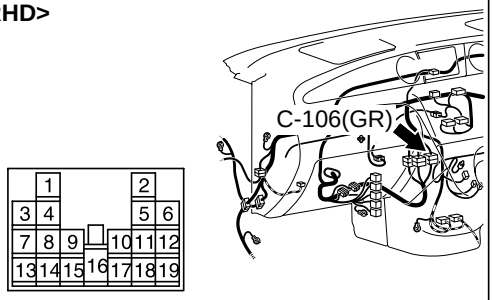

AC308735AC

Connector: C-106 <LHD>

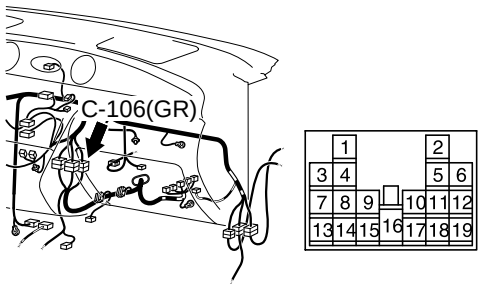

AC308718AC

Connectors: C-202, C-203 <LHD>
Junction block (Front view)

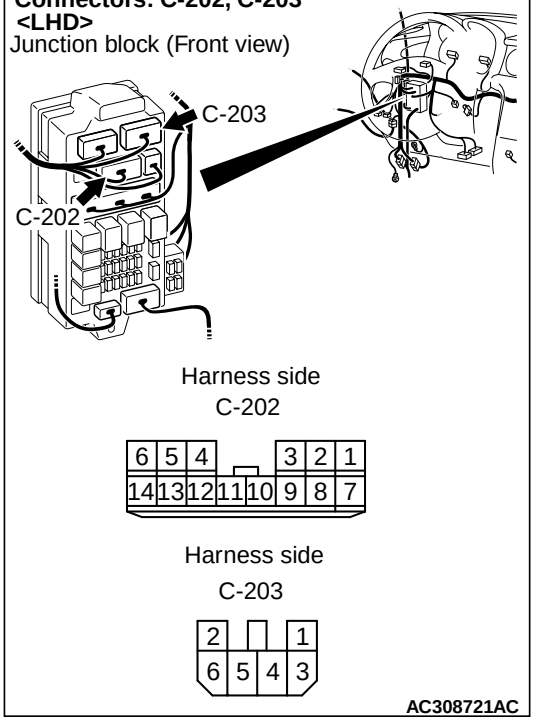

AC308721AC

Connectors: C-202, C-203 <RHD>
Junction block (Front view)

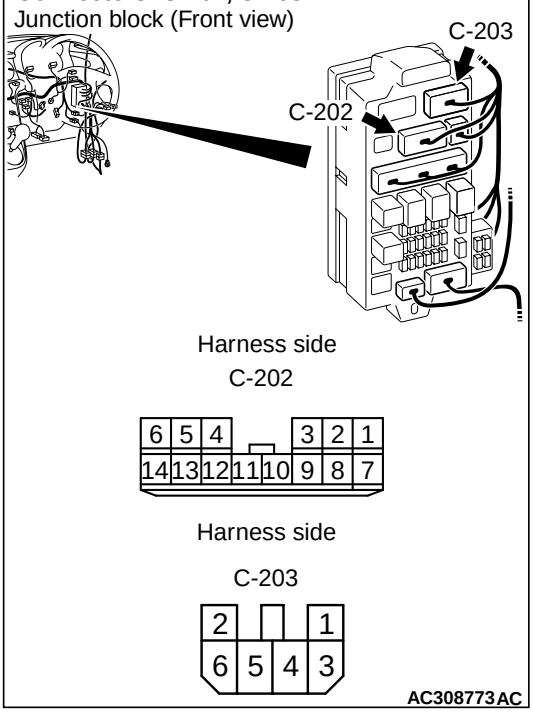

AC308773AC

Prior to the wiring harness inspection, check intermediate connector C-106, junction block connectors C-202 and C-203, and repair if necessary.

- Check the power supply line to the ignition switch (IG1) for open circuit.

Q: Is the check result normal?
YES : The trouble can be an intermittent malfunction (Refer to GROUP 00 – How to Cope with Intermittent Malfunction P.00-6).
NO : Repair the wiring harness.

Step 7. Retest the system.
Check that the back-up lamp switch signal is received normally.

Q: Is the check result normal?
YES : The trouble can be an intermittent malfunction (Refer to GROUP 00 – How to Cope with Intermittent Malfunction P.00-6).
NO : Replace the ETACS-ECU.

INSPECTION PROCEDURE N-3: The inhibitor switch (reverse position) signal is not received. <A/T>

⚠ CAUTION

Whenever the ECU is replaced, ensure that the input signal circuit is normal.

Inhibitor Switch Input Circuit

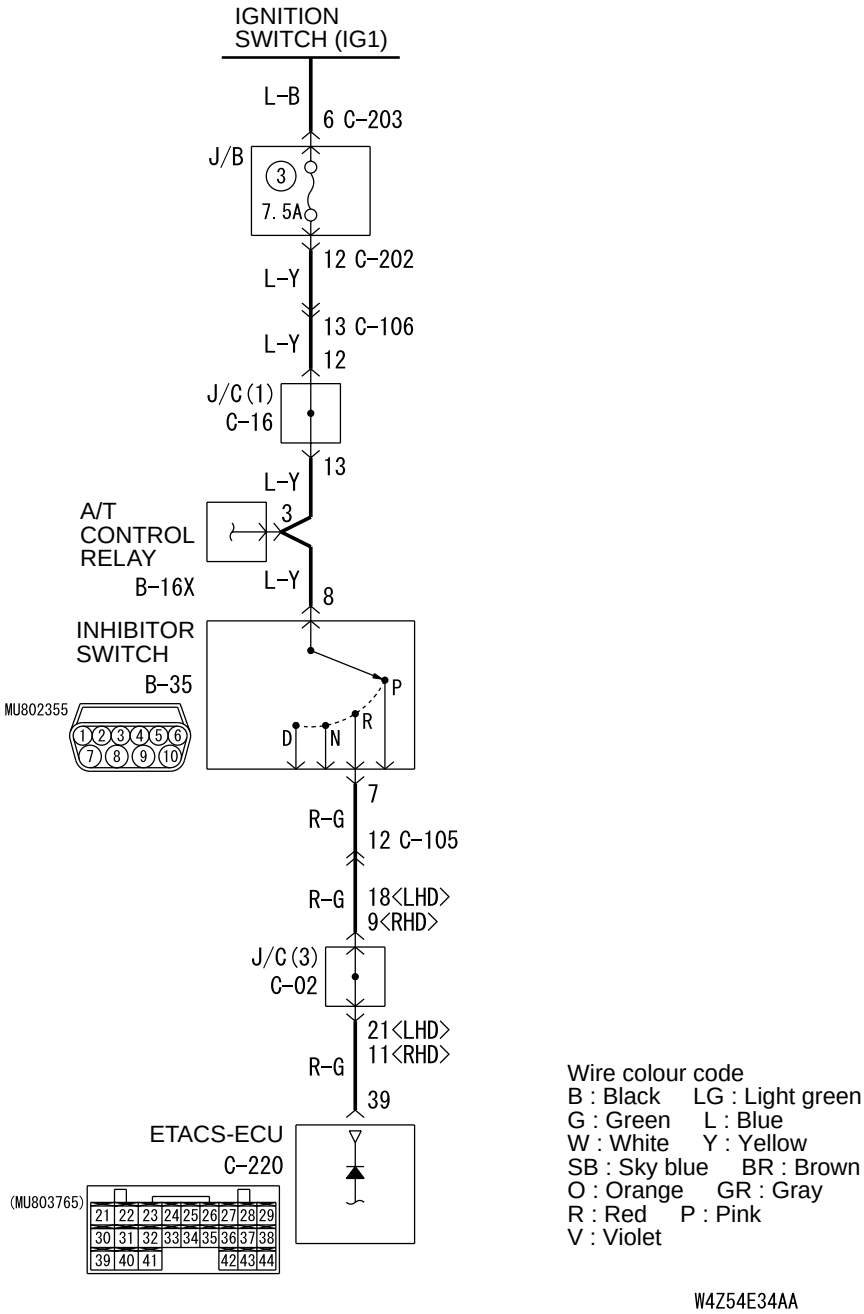

COMMENTS ON TROUBLE SYMPTOM

Input signal from the back-up lamp switch is used to operate the rear wiper. If the signal is abnormal, the rear wiper will not work normally.

POSSIBLE CAUSES

- Malfunction of the inhibitor switch
- Malfunction of the ETACS-ECU
- Damaged harness wires and connectors

DIAGNOSTIC PROCEDURE

Step 1. Connector check: B-35 inhibitor switch connector and C-220 ETACS-ECU connector

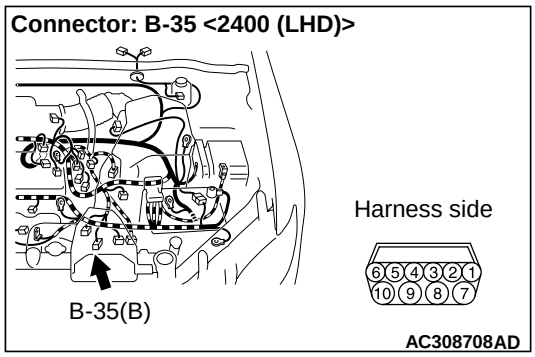

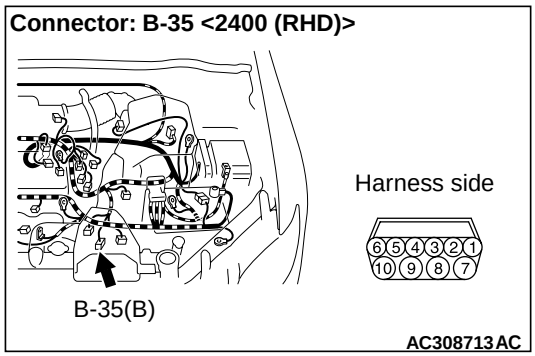

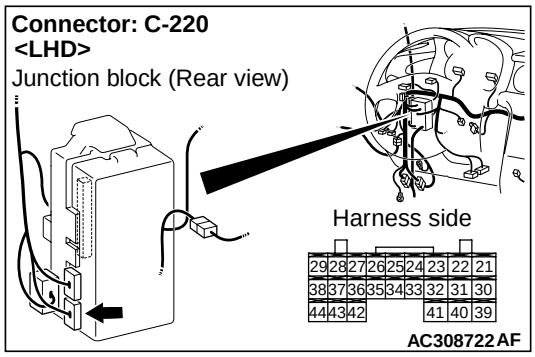

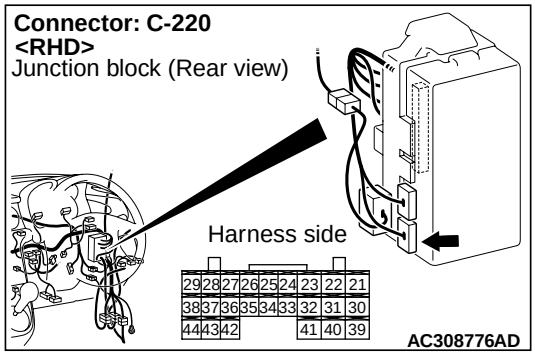

Q: Is the check result normal?
YES : Go to Step 2.
NO : Repair the connector.

Step 2. Check the inhibitor switch

Refer to GROUP 23 – On-vehicle Service P.23A-145.

Q: Is the check result normal?
YES : Go to Step 3.
NO : Replace the inhibitor switch.

Step 3. Voltage measurement at the C-220 ETACS-ECU connector

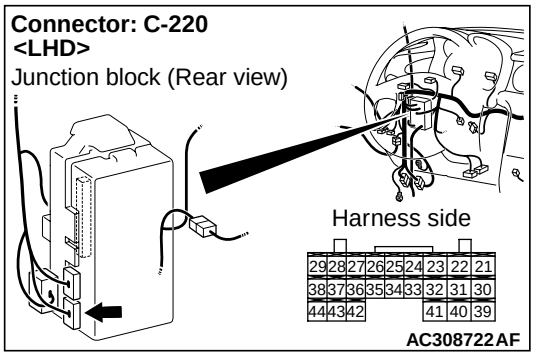

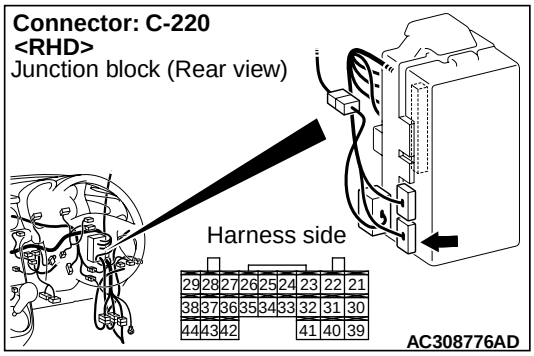

(1) Disconnect the connector, and measure at the wiring harness side.
(2) Ignition switch: ON
(3) Selector lever: R position

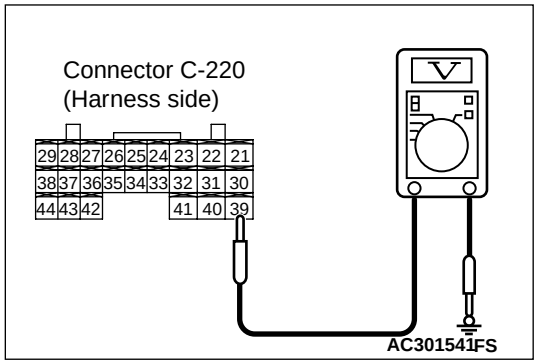

(4) Voltage between C-220 ETACS-ECU connector terminal No.39 and body earth

OK: System voltage

Q: Is the check result normal?
YES : Replace the ETACS-ECU.
NO : Go to Step 4.

Step 4. Voltage measurement at the B-35 inhibitor switch connector

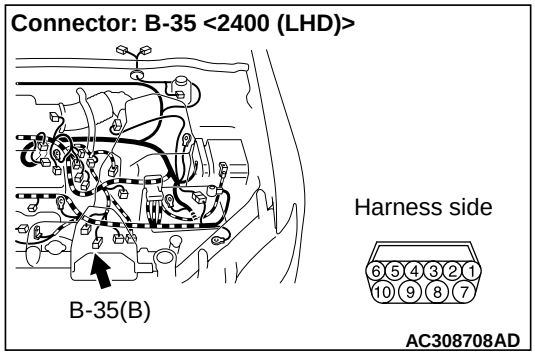

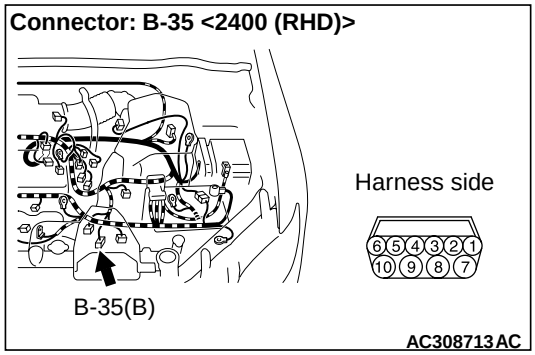

(1) Disconnect the connector, and measure at the wiring harness side.
(2) Ignition switch: ON

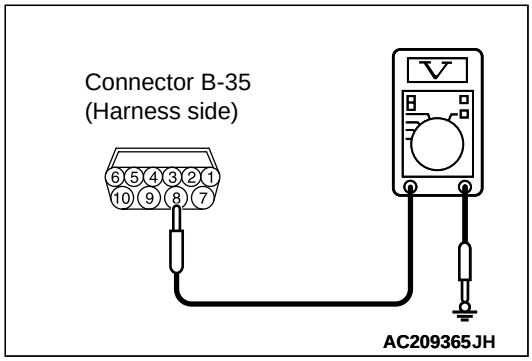

(3) Voltage between B-35 inhibitor switch connector terminal No.8 and body earth

OK: System voltage

Q: Is the check result normal?
YES : Go to Step 5.
NO : Go to Step 6.

Step 5. Check the wiring harness between B-35 inhibitor switch connector terminal No.7 and C-220 ETACS-ECU connector terminal No.39.

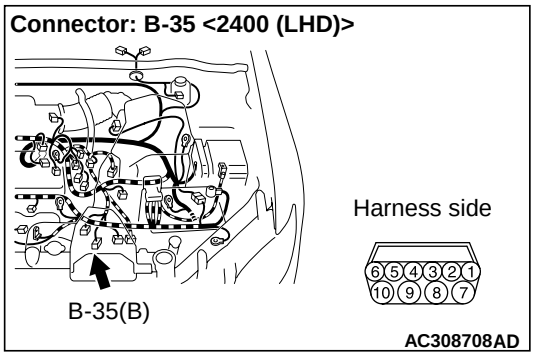

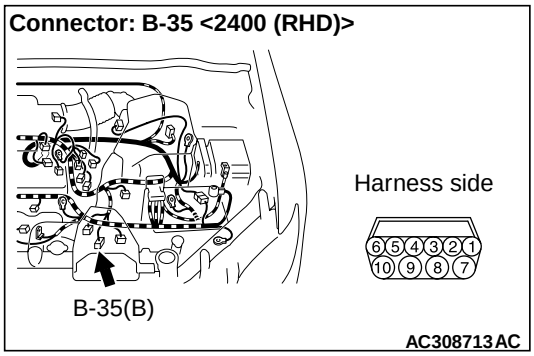

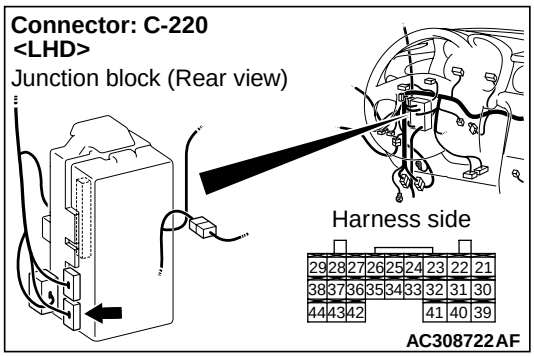

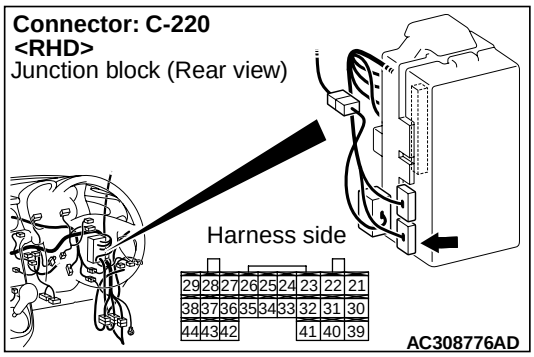

NOTE:

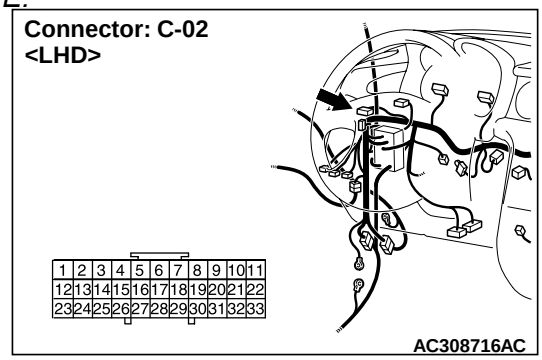

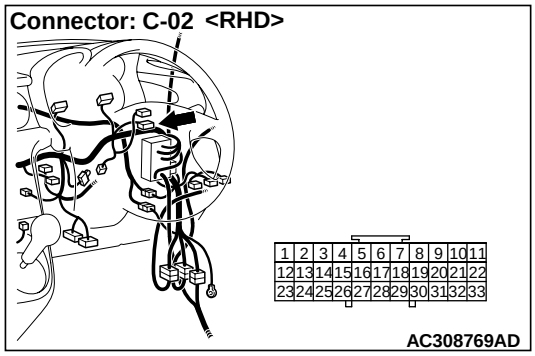

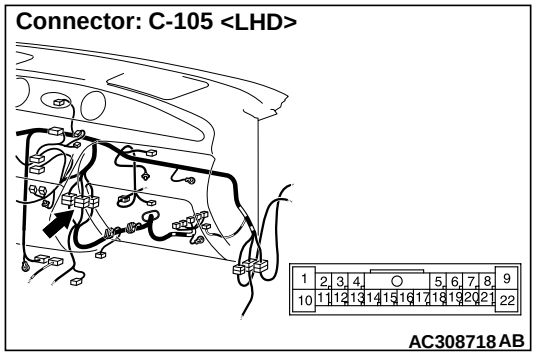

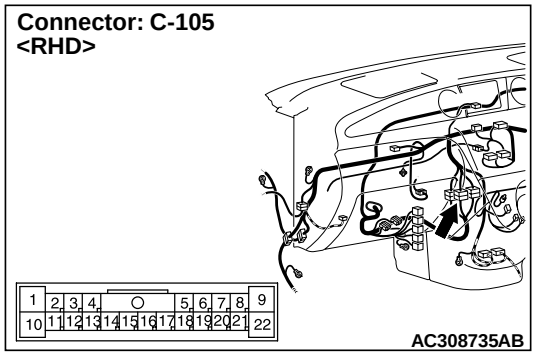

Prior to the wiring harness inspection, check joint connector C-02 and intermediate connector C-105, and repair if necessary.

- Check the input line for open circuit.

Q: Is the check result normal?

YES : Go to Step 7.
NO : Repair the wiring harness.

Step 6. Check the wiring harness between B-35 inhibitor switch connector terminal No.8 and the ignition switch (IG1).

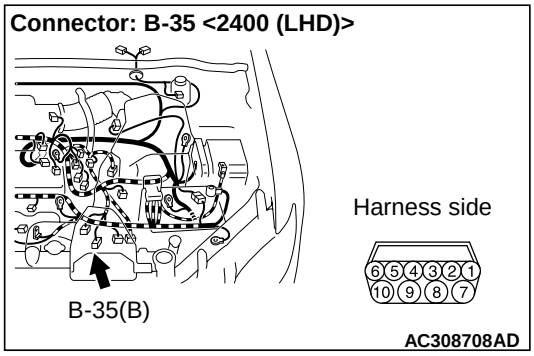

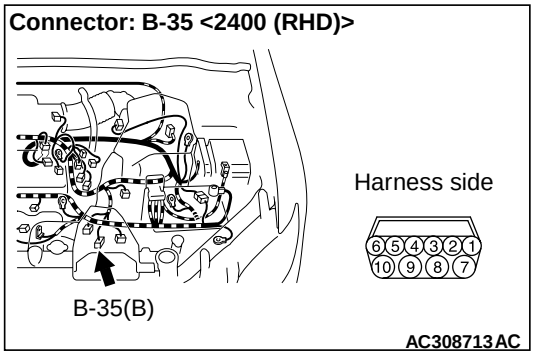

NOTE:

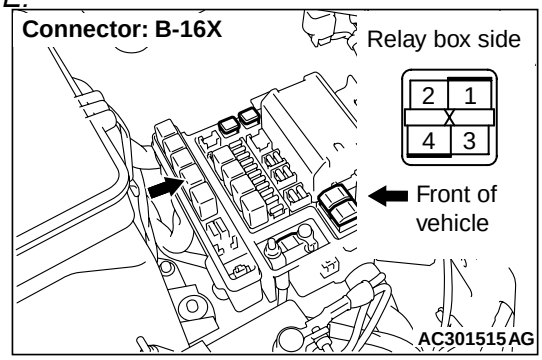

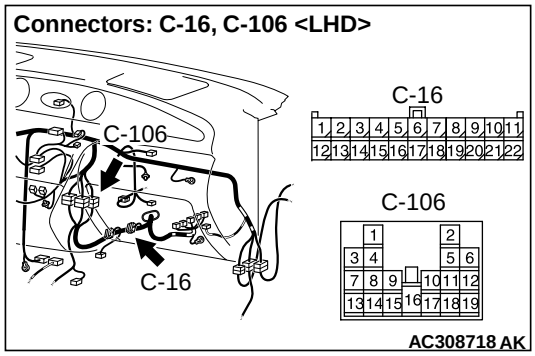

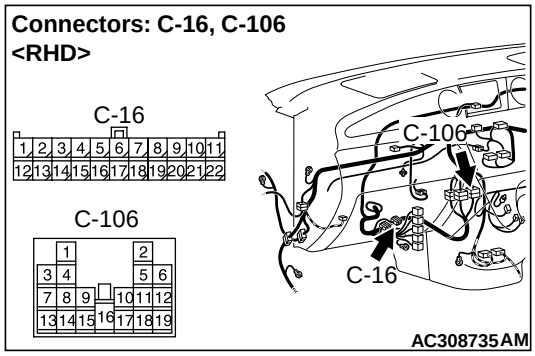

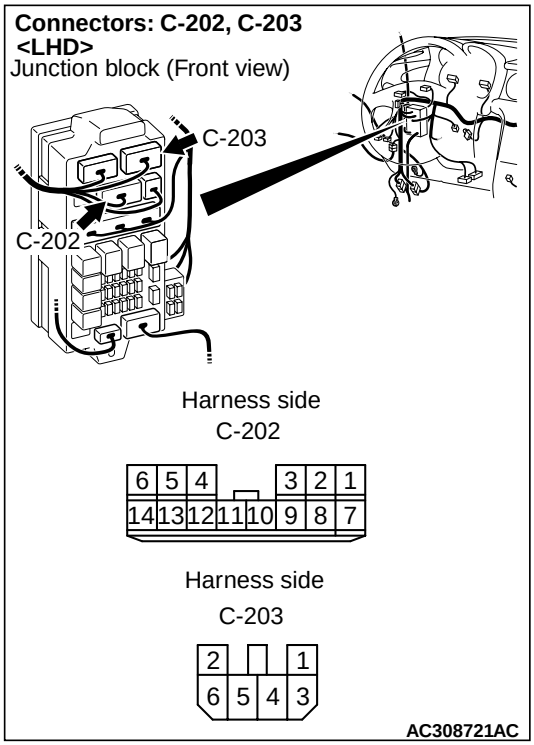

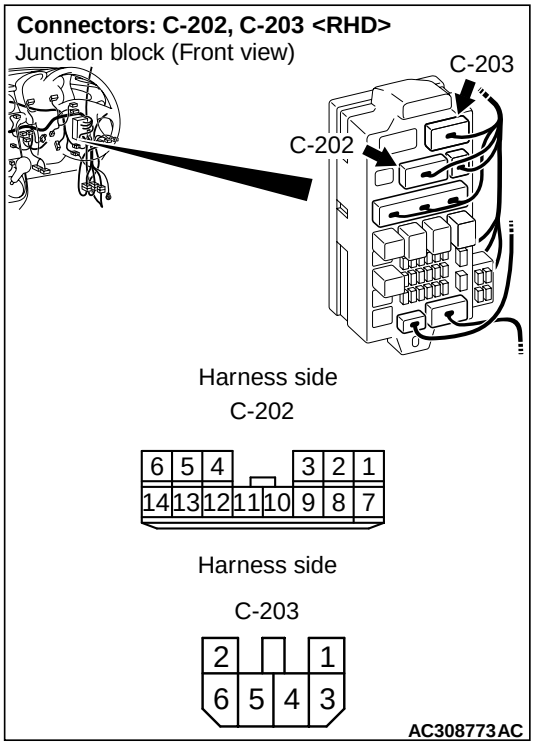

Prior to the wiring harness inspection, check A/T control relay connector B-16X, joint connector C-16, intermediate connector C-106 and junction block connectors C-202 and C-203, and repair if necessary.

- Check the power supply line to the ignition switch (IG1) for open circuit.

Q: Is the check result normal?

YES : The trouble can be an intermittent malfunction (Refer to GROUP 00 – How to Cope with Intermittent Malfunction P.00-6).
NO : Repair the wiring harness.

Step 7. Retest the system.
Check that the inhibitor switch (reverse position) signal is received normally.

Q: Is the check result normal?
YES : The trouble can be an intermittent malfunction (Refer to GROUP 00 – How to Cope with Intermittent Malfunction P.00-6).
NO : Replace the ETACS-ECU.

INSPECTION PROCEDURE N-4: The front door switch (LH) signal is not received. <L.H. drive vehicles>

⚠ CAUTION

Whenever the ECU is replaced, ensure that the input signal circuit is normal.

Driver's Door Switch Input Circuit <LHD>

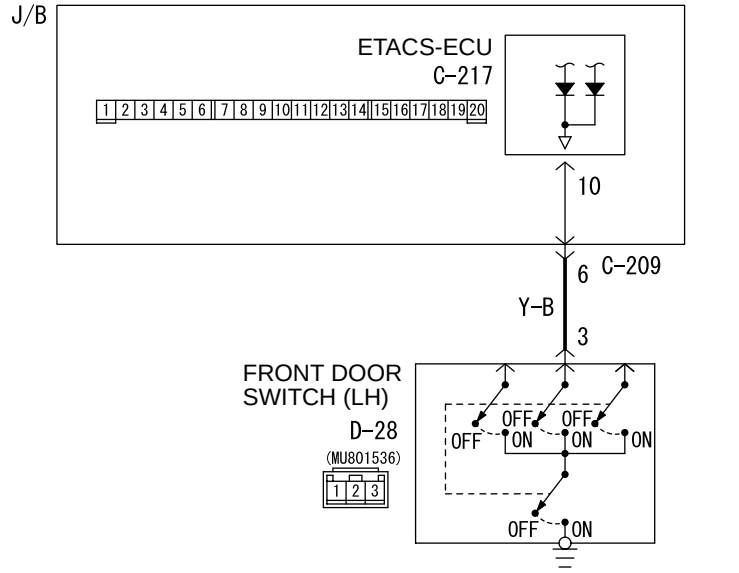

Wire colour code
B : Black LG : Light green G : Green L : Blue W : White Y : Yellow SB : Sky blue
BR : Brown O : Orange GR : Gray R : Red P : Pink V : Violet

W3Z10E27AB

COMMENTS ON TROUBLE SYMPTOM

Input signal from the driver's door switch is used to operate the functions below. If the signal is abnormal, these functions will not work normally.

- Lamp reminder function
- Key reminder function
- Ignition key cylinder illumination lamp
- Headlamp automatic-shutdown function
- Room lamps

POSSIBLE CAUSES

- Malfunction of the front door switch (LH)
- Malfunction of the ETACS-ECU
- Damaged harness wires and connectors

DIAGNOSTIC PROCEDURE

Step 1. Check the installation condition.
Check that the front door switch (LH) is installed on the body correctly.

Q: Is the check result normal?
YES : Go to Step 2.
NO : Correct the installation condition.

Step 2. Connector check: D-28 front door switch (LH) connector

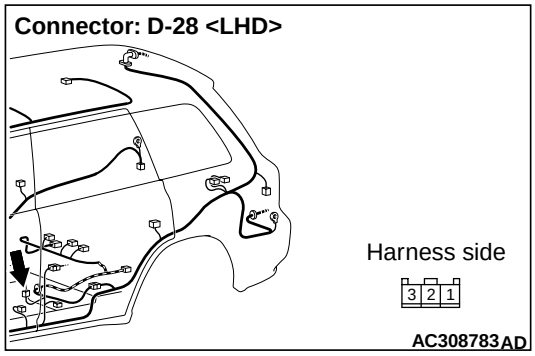

Q: Is the check result normal?
YES : Go to Step 3.
NO : Repair the defective connector.

Step 3. Check the front door switch (LH).
Refer to GROUP 42 – Door P.42-30.

Q: Is the check result normal?
YES : Go to Step 4.
NO : Replace the front door switch (LH).

Step 4. Connector check: C-217 ETACS-ECU connector

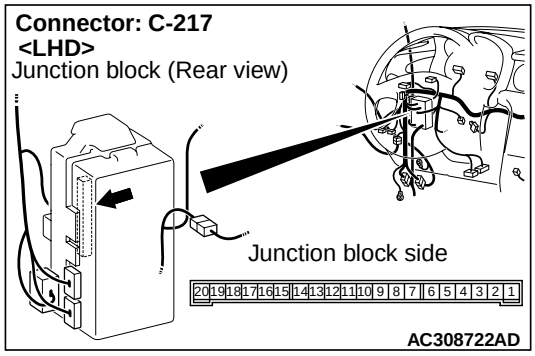

Q: Is the check result normal?
YES : Go to Step 5.
NO : Repair the defective connector.

Step 5. Check the wiring harness between D-28 front door switch (LH) connector terminal No.3 and C-217 ETACS-ECU connector terminal No.10.

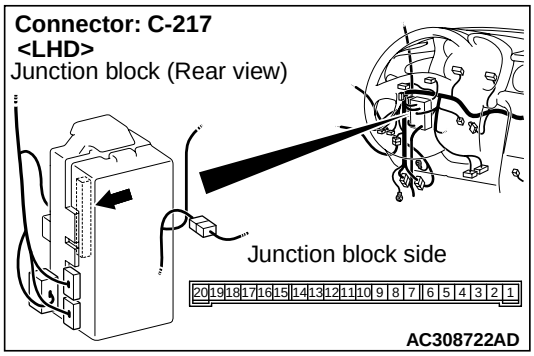

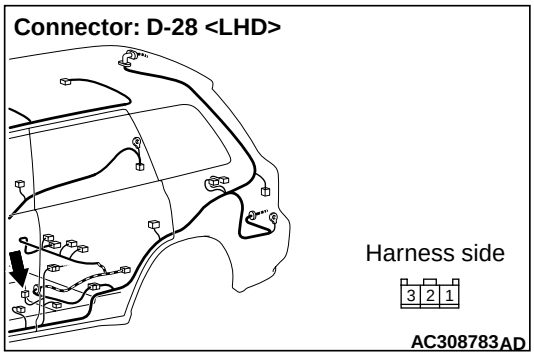

NOTE:

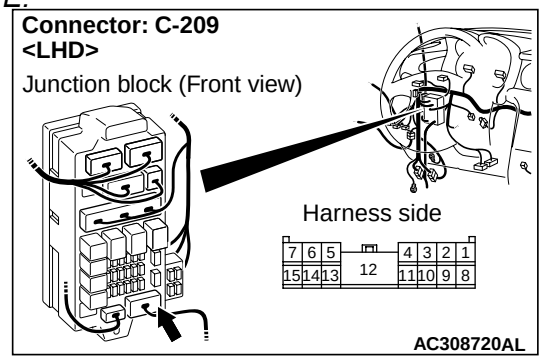

Prior to the wiring harness inspection, check joint connector C-209, and repair if necessary.

- Check the input line for open circuit.

Q: Is the check result normal?
YES : Go to Step 6.
NO : Repair the wiring harness.

Step 6. Retest the system.
Check that the driver's door switch signal is received normally.

Q: Is the check result normal?
YES : The trouble can be an intermittent malfunction (Refer to GROUP 00 – How to Cope with Intermittent Malfunction P.00-6).
NO : Replace the ETACS-ECU.

INSPECTION PROCEDURE N-4: The front door switch (RH) signal is not received. <R.H. drive vehicles>

⚠ CAUTION

Whenever the ECU is replaced, ensure that the input signal circuit is normal.

Driver's Door Switch Input Circuit <RHD>

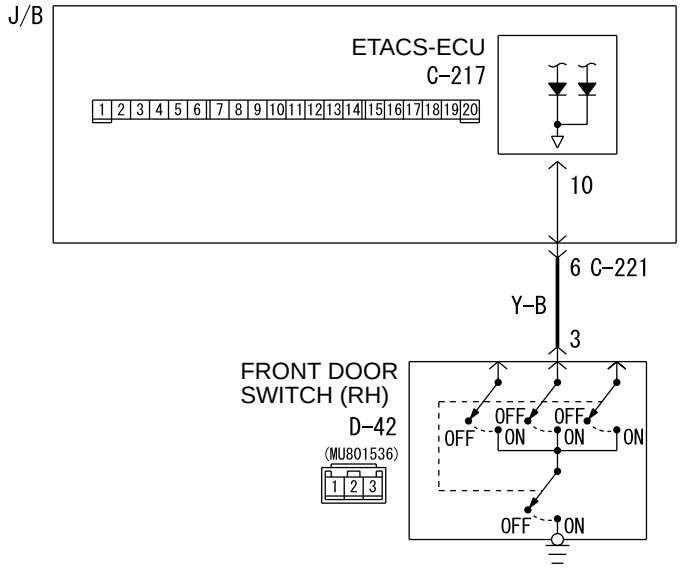

Wire colour code
B : Black LG : Light green G : Green L : Blue W : White Y : Yellow SB : Sky blue
BR : Brown O : Orange GR : Gray R : Red P : Pink V : Violet

W4Z54E35AA

COMMENTS ON TROUBLE SYMPTOM

Input signal from the front door switch (RH) is used to operate the functions below. If the signal is abnormal, these functions will not work normally.

- Lamp reminder function
- Headlamp automatic-shutdown function
- Room lamps

POSSIBLE CAUSES

- Malfunction of the front door switch (RH)
- Malfunction of the ETACS-ECU
- Damaged harness wires and connectors

DIAGNOSTIC PROCEDURE

Step 1. Check the installation condition.
Check that the front door switch (RH) is installed on the body correctly.

Q: Is the check result normal?
YES : Go to Step 2.
NO : Correct the installation condition.

Step 2. Connector check: D-42 front door switch (RH) connector

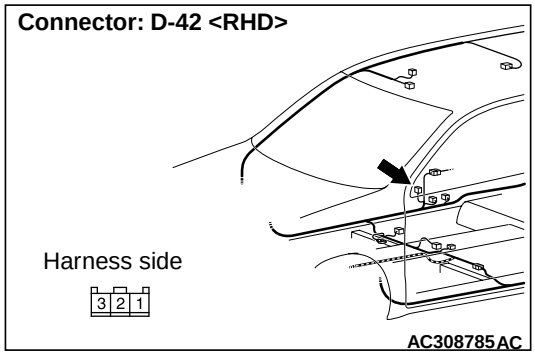

Q: Is the check result normal?
YES : Go to Step 3.
NO : Repair the defective connector.

Step 3. Check the front door switch (RH).
Refer to GROUP 42 – Door P.42-30.

Q: Is the check result normal?
YES : Go to Step 4.
NO : Replace the front door switch (RH).

Step 4. Connector check: C-217 ETACS-ECU connector

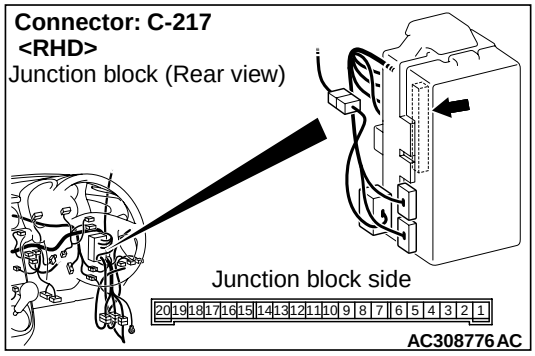

Q: Is the check result normal?
YES : Go to Step 5.
NO : Repair the defective connector.

Step 5. Check the wiring harness between D-42 front door switch (RH) connector terminal No.3 and C-217 ETACS-ECU connector terminal No.10.

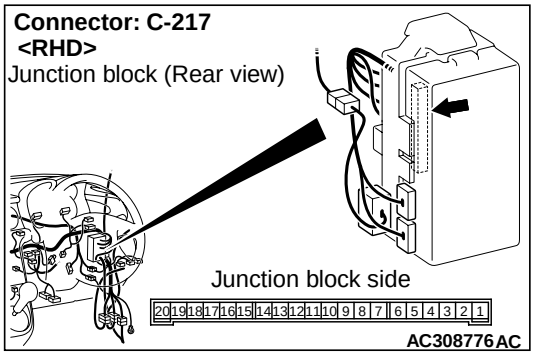

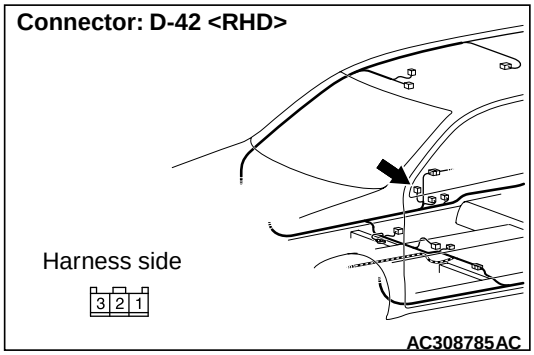

NOTE:

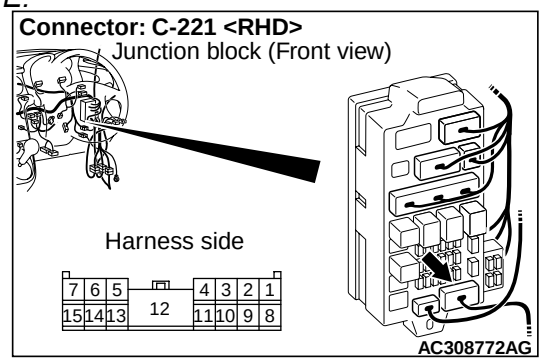

Prior to the wiring harness inspection, check joint connector C-221, and repair if necessary.

- Check the input line for open circuit.

Q: Is the check result normal?
YES : Go to Step 6.
NO : Repair the wiring harness.

Step 6. Retest the system.
Check that the front door switch (RH) signal is received normally.

Q: Is the check result normal?

YES : The trouble can be an intermittent malfunction (Refer to GROUP 00 – How to Cope with Intermittent Malfunction P.00-6).
NO : Replace the ETACS-ECU.

INSPECTION PROCEDURE N-5: The column switch (lighting, turn-signal lamp and headlamp washer switch) signal is not received.

⚠ CAUTION
Whenever the ECU is replaced, ensure that the input signal circuit is normal.

Lighting Switch Input Circuit

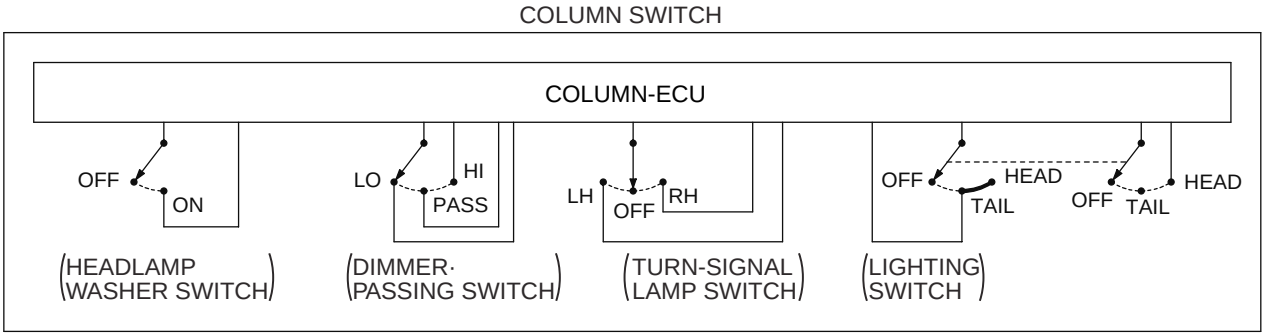

W3Z10E28AB

COMMENTS ON TROUBLE SYMPTOM
Input signal from the column switch (lighting, turn-signal lamp and headlamp washer switch) is used to operate the functions below. If the signal is abnormal, these functions will not work normally.
- Lamp reminder function
- Headlamp and tail lamp
- Fog lamp
- Turn signal lamp
- Headlamp washer

POSSIBLE CAUSES
- Malfunction of the column switch
- Damaged harness wires and connectors

DIAGNOSTIC PROCEDURE

Step 1. Check the column switch connector.
Check that the wiper and washer switch connector, the lighting switch connector and the switch body connector are in good condition.

Q: Is the check result normal?

YES : Go to Step 2.
NO : Repair the defective connector.

Step 2. Check the column switch (lighting switch and switch body).
Refer to GROUP 54A – Column switch P.54A-105.

Q: Is the check result normal?
YES : Go to Step 3.
NO : Replace the column switch.

Step 3. Use the MUT-II/III to confirm a diagnosis code.
Check that the ETACS-ECU sets a diagnosis code.

Q: Is the diagnosis code set?
YES : Refer to diagnosis code chart P.00-6.
NO : Go to Step 4.

Step 4. Retest the system.
Replace the column switch, and check if the column switch (lighting, turn-signal lamp and headlamp washer switch) sends signal.

(1) Replace the column switch.

(2) Check if the column switch (lighting and turn-signal switch) sends signal.

Q: Is the check result normal?
YES : The procedure is complete.
NO : Replace the ETACS-ECU.

INSPECTION PROCEDURE N-6: The column switch (windshield wiper washer and rear wiper washer switch) signal is not received.

⚠ CAUTION
Whenever the ECU is replaced, ensure that the input signal circuit is normal.

Windshield Wiper and Washer Switch Input Circuit

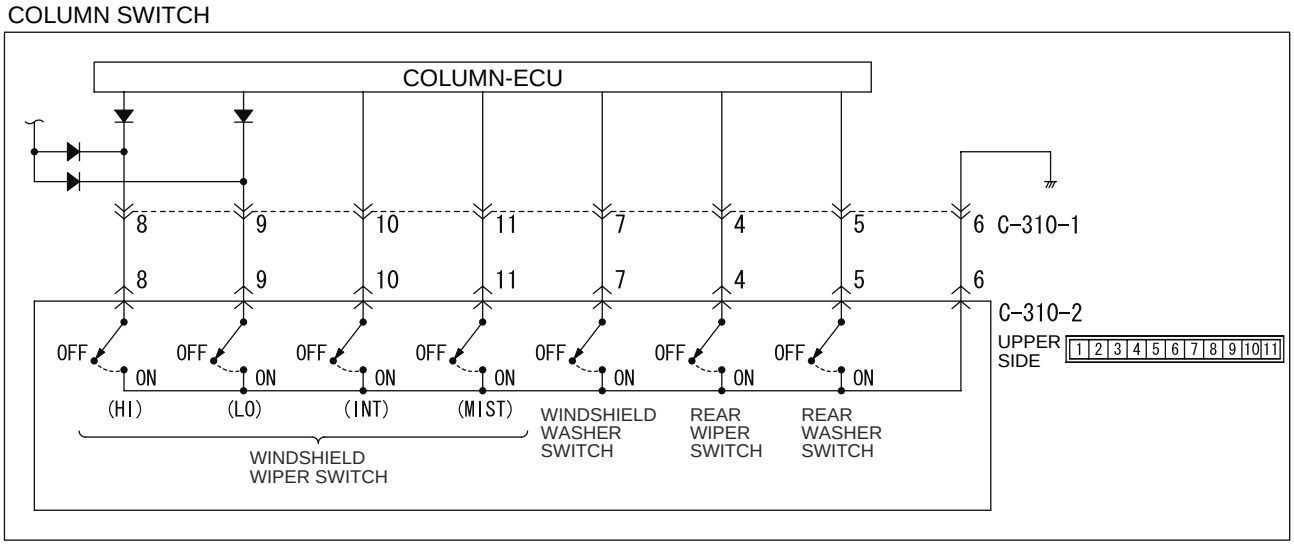

W3Z10E29AA

COMMENTS ON TROUBLE SYMPTOM
Input signal from the column switch (wiper switch) is used to operate the functions below. If the signal is abnormal, these functions will not work normally.

- Windshield wiper and washer
- Rear wiper and washer

POSSIBLE CAUSES
- Malfunction of the column switch
- Damaged harness wires and connectors

DIAGNOSTIC PROCEDURE

Step 1. Use the MUT-II/III to confirm a diagnosis code.
Check that the ETACS-ECU sets a diagnosis code.

Q: Is the diagnosis code set?
YES : Refer to diagnosis code chart P.00-6.
NO : Go to Step 2.

Step 2. Retest the system.
Replace the column switch, and check if the column switch (windshield wiper washer and rear wiper washer switch) sends signal.
(1) Replace the column switch.
(2) Check if the column switch (windshield wiper/washer and rear wiper washer switch) sends signal.

Q: Is the check result normal?
YES : The procedure is complete.
NO : Replace the ETACS-ECU.

INSPECTION PROCEDURE N-7: The windshield intermittent wiper volume signal is not received.

⚠ CAUTION
Whenever the ECU is replaced, ensure that the input signal circuit is normal.

Windshield Intermittent Wiper Interval Adjusting Knob Input Circuit

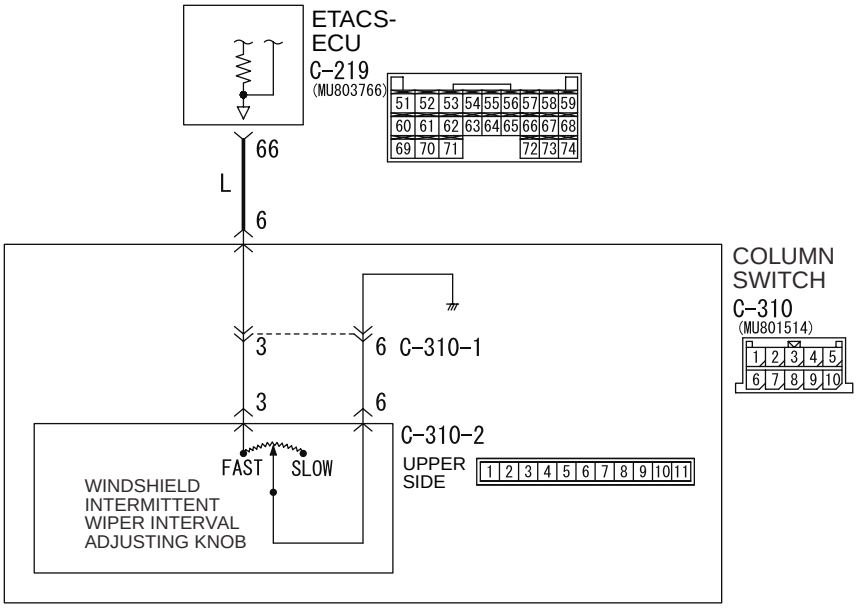

Wire colour code
B : Black LG : Light green G : Green L : Blue W : White Y : Yellow SB : Sky blue
BR : Brown O : Orange GR : Gray R : Red P : Pink V : Violet

W3Z10E30AA

COMMENTS ON TROUBLE SYMPTOM
The intermittent wiper interval is calculated in accordance with the input signal from the windshield intermittent wiper volume. If this signal is abnormal, the wiper interval can not be adjusted.

POSSIBLE CAUSES
- Malfunction of the column switch
- Malfunction of the ETACS-ECU
- Damaged harness wires and connectors

DIAGNOSTIC PROCEDURE

Step 1. Connector check: C-310 column switch connector

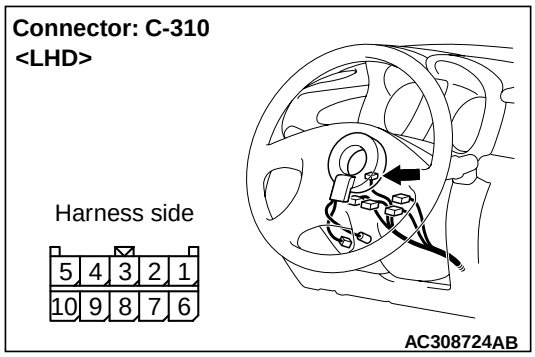

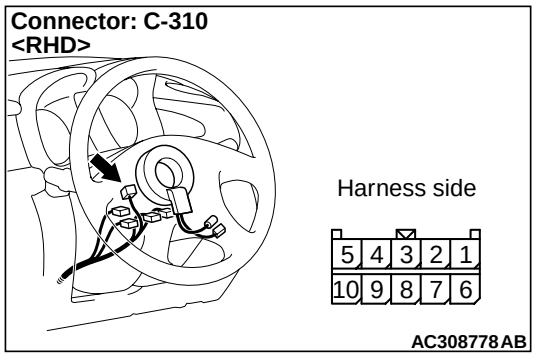

Q: Is the check result normal?
YES : Go to Step 2.
NO : Repair the defective connector.

Step 2. Measure the resistance at the C-310 column switch connector.

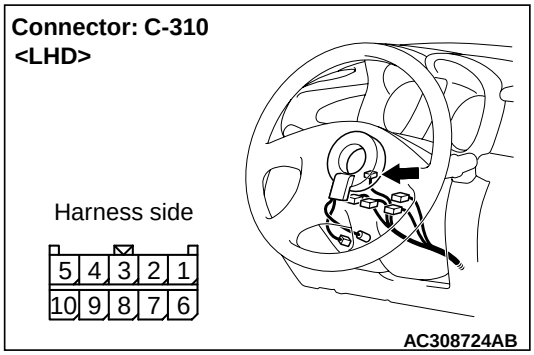

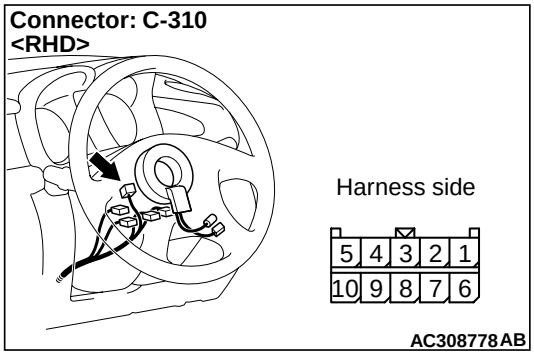

(1) Disconnect the connector, and measure at the column switch side.

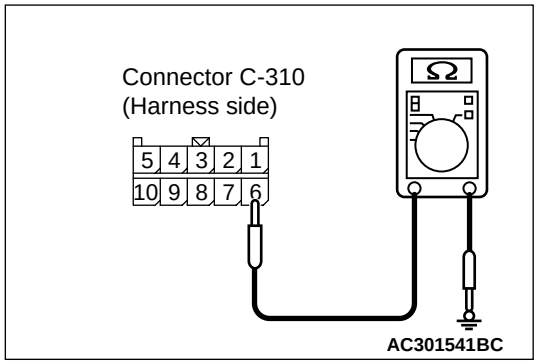

(2) Resistance between C-310 column switch connector terminal No.6 and body earth

OK: The resistance should rise from 0 to 1 kΩ when the windshield intermittent wiper volume is rotated from "Fast" to "Slow".

Q: Is the check result normal?
YES : Go to Step 3.
NO : Replace the column switch.

Step 3. Connector check: C-219 ETACS-ECU connector

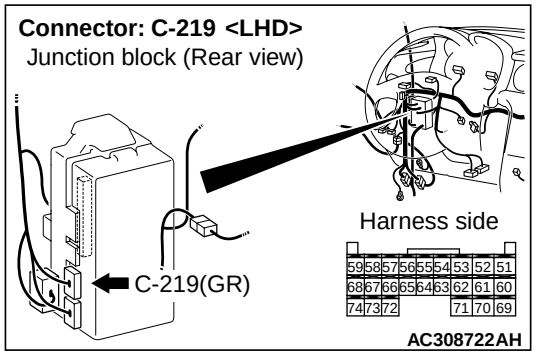

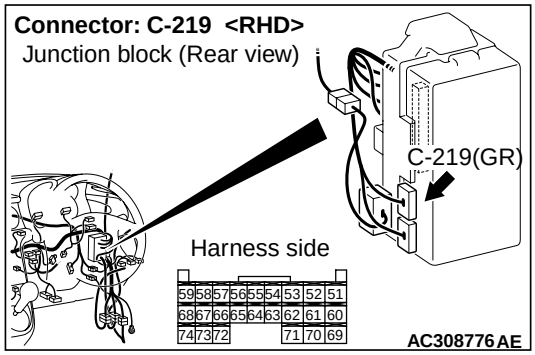

Q: Is the check result normal?
YES : Go to Step 4.
NO : Repair the defective connector.

Step 4. Check the wiring harness between C-310 column switch connector terminal No.6 and C-219 ETACS-ECU connector terminal No.66.

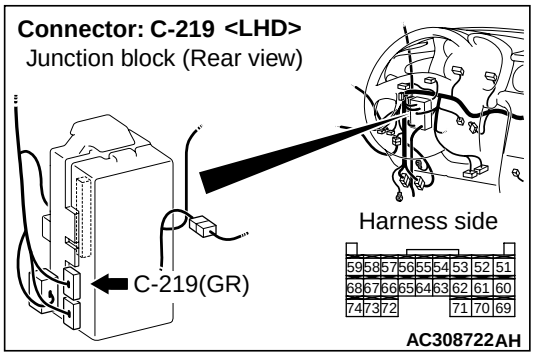

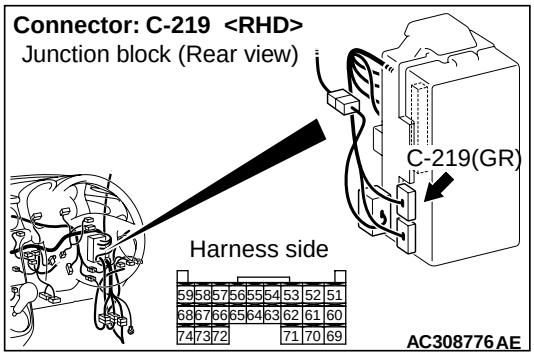

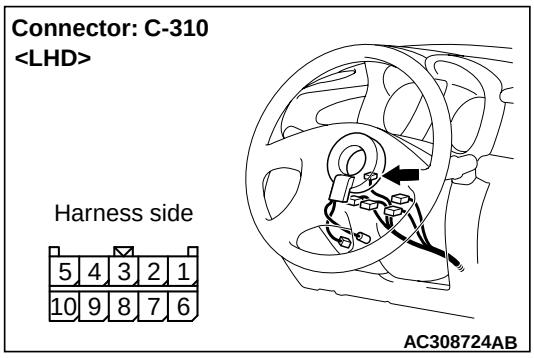

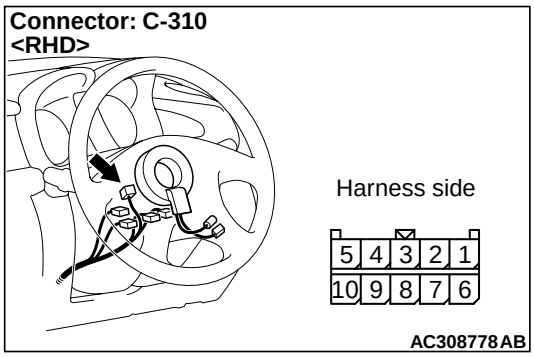

- Check the input line for open circuit.

Q: Is the check result normal?
YES : Go to Step 5.
NO : Repair the wiring harness.

Step 5. Retest the system.
Check that the windshield intermittent wiper volume is sending a correct signal.

Q: Is the check result normal?

YES : The trouble can be an intermittent malfunction (Refer to GROUP 00 – How to Cope with Intermittent Malfunction P.00-6).

NO : Replace the ETACS-ECU.

INSPECTION PROCEDURE N-8: When the power window main switch is operated, the switch signals are not received.

⚠ CAUTION

Whenever the ECU is replaced, ensure that the input signal circuit is normal.

Power Window Main Switch Input Circuit <LHD>

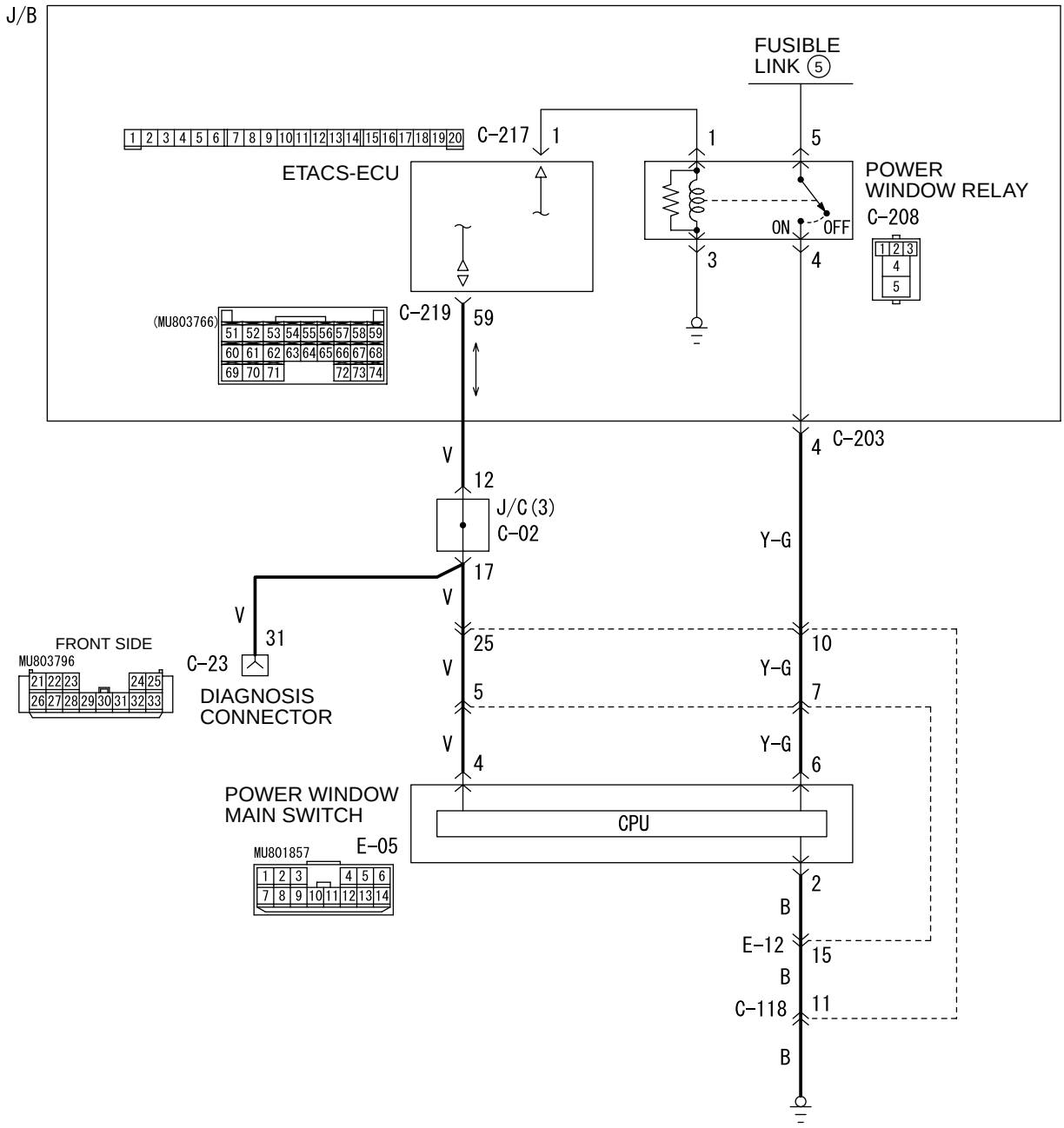

Wire colour code
B : Black LG : Light green G : Green L : Blue W : White Y : Yellow SB : Sky blue
BR : Brown O : Orange GR : Gray R : Red P : Pink V : Violet

W3Z10E46AB

Pwer Window Main Switch Input Circuit <RHD>

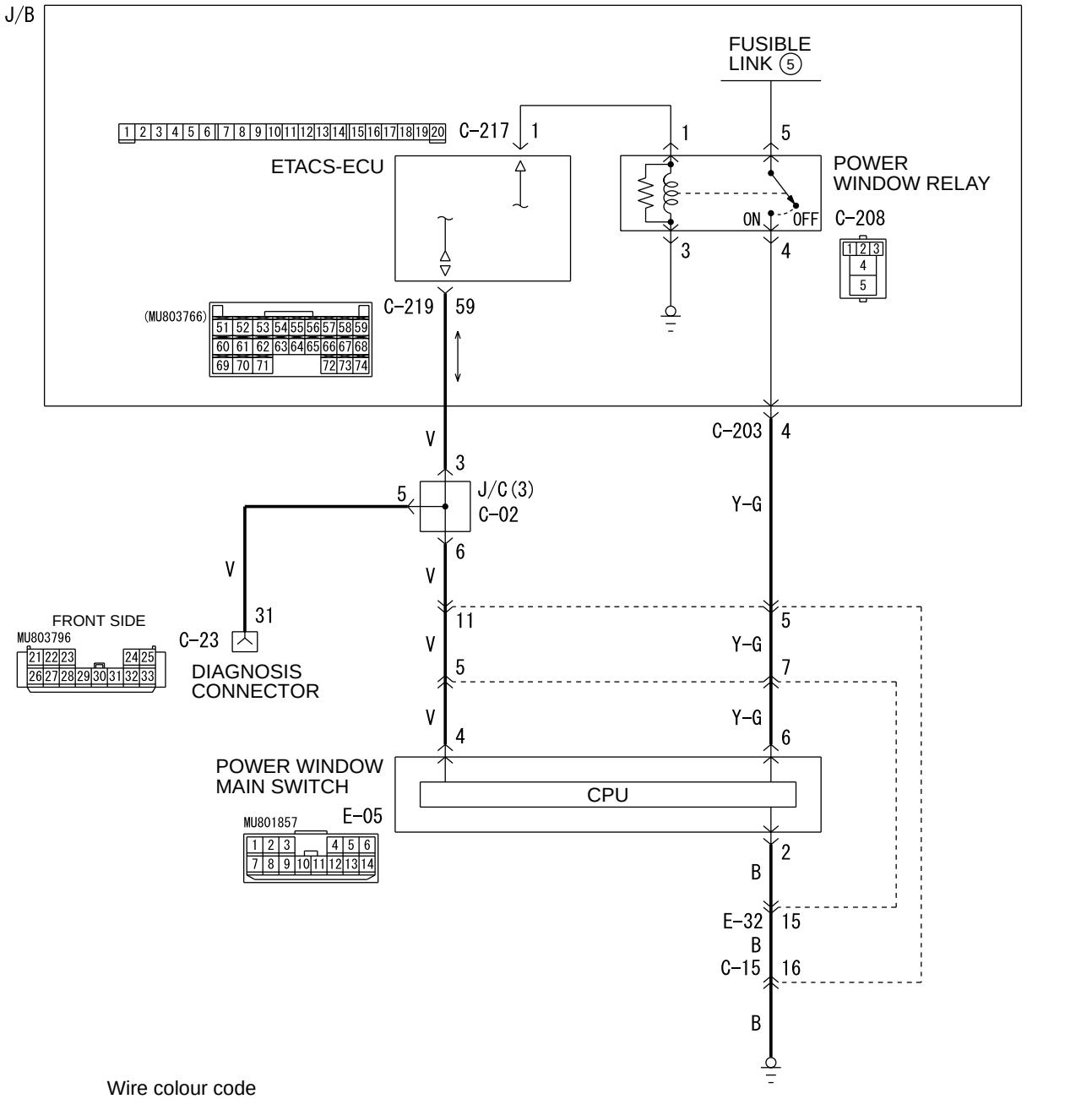

COMMENTS ON TROUBLE SYMPTOM

Input signal from the power window main switch is used in order to check the power window main switch and confirm how the system is communicating with the ETACS-ECU. If the communication line is defective, the power windows will not work normally.

POSSIBLE CAUSES

- Malfunction of the power window main switch
- Damaged harness wires and connectors

DIAGNOSTIC PROCEDURE

Step 1. Check the operation by using the power window main switch.
Check if each window can be operated by means of the power window main switch.

Q: Can each power window be operated by means of the power window main switch?
YES : Go to Step 2.
NO : Go to Step 5.

Step 2. Connector check: C-219 ETACS-ECU connector and E-05 power window main switch connector

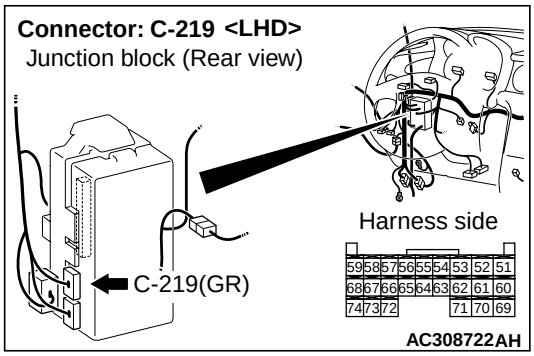

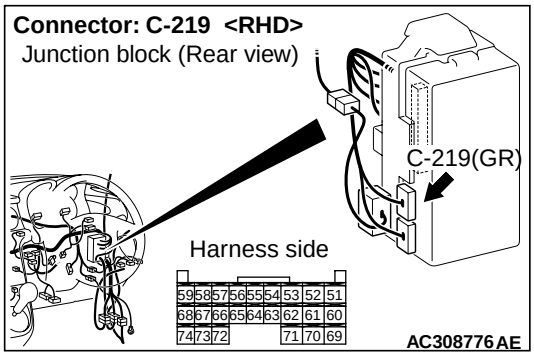

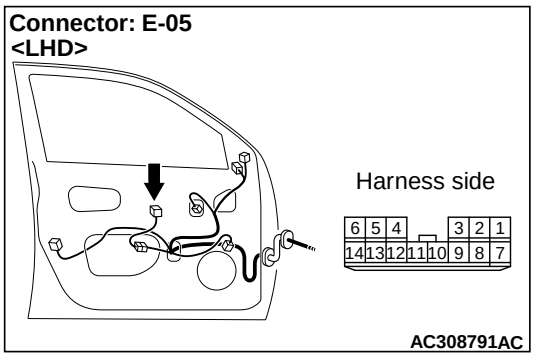

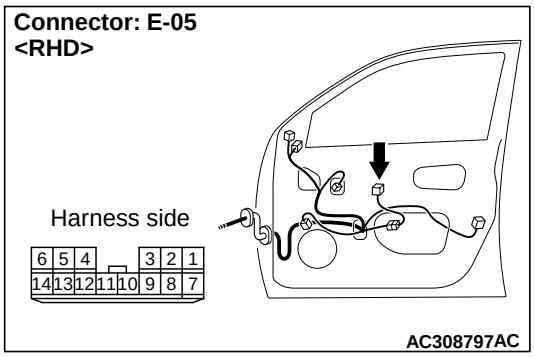

Q: Is the check result normal?
YES : Go to Step 3.
NO : Repair the defective connector.

Step 3. Check the wiring harness between C-219 ETACS-ECU connector terminal No.59 and E-05 power window main switch connector terminal No.4.

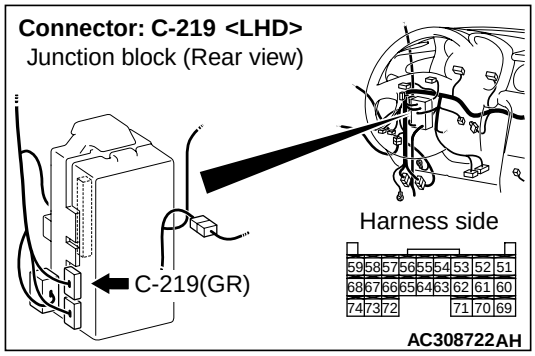

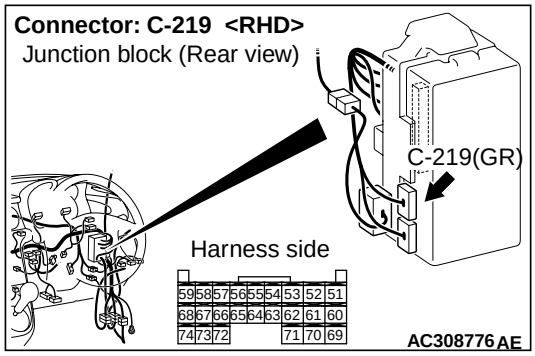

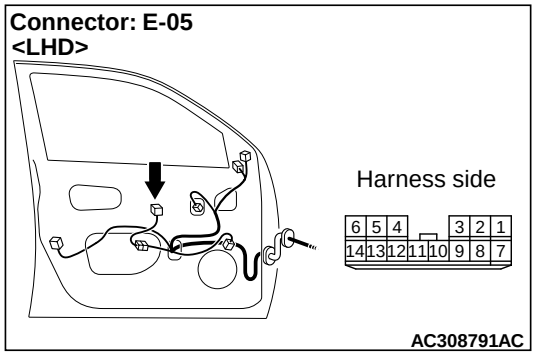

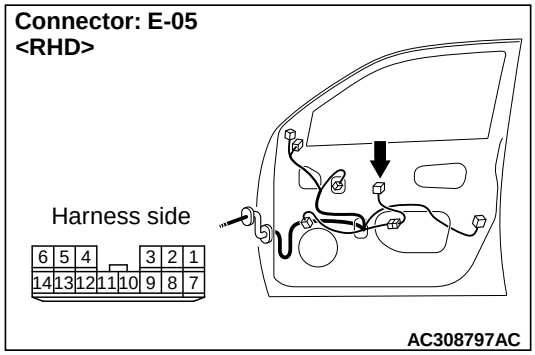

NOTE:

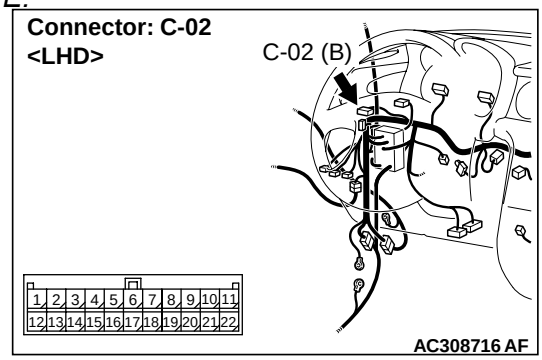

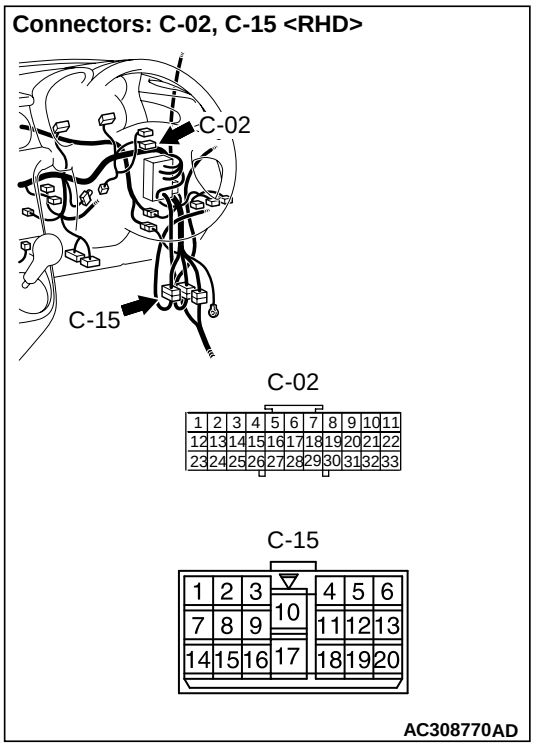

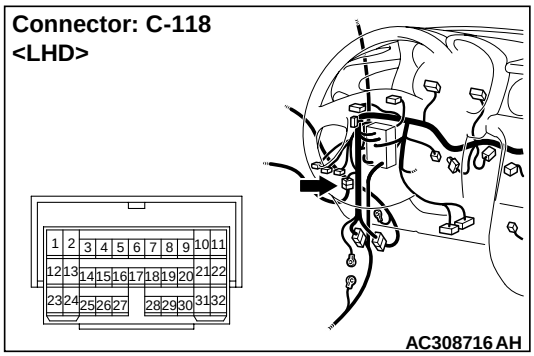

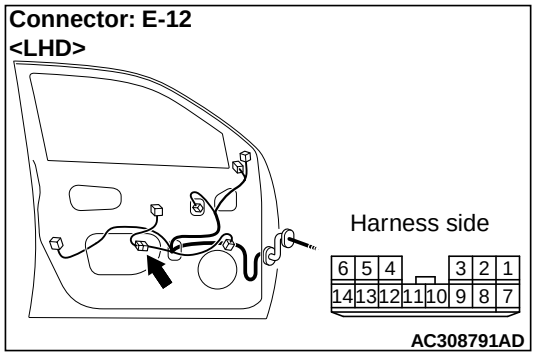

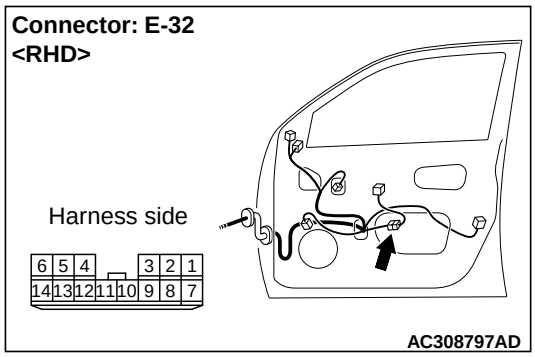

Prior to the wiring harness inspection, check intermediate connectors C-118 <L.H. drive vehicles>, E-12 <L.H. drive vehicles>, C-15 <R.H. drive vehicles>, E-32 <R.H. drive vehicles> and joint connector C-02, and repair if necessary.

- Check the communication lines for open circuit.

Q: Is the check result normal?
YES : Go to Step 4.
NO : Repair the wiring harness.

Step 4. Replace the power window main switch, and then retest the system.

Replace the power window main switch, and check that the power window main switch signal is received.

(1) Replace the power window main switch.
(2) Check that the power window main switch signal is received.

Q: Is the check result normal?
YES : The procedure is complete.
NO : Replace the ETACS-ECU.

Step 5. Measure the voltage at the E-05 power window main switch connector.

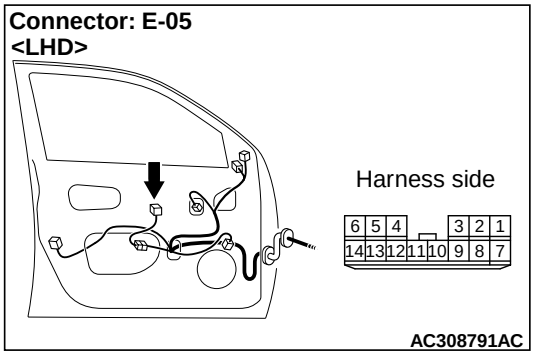

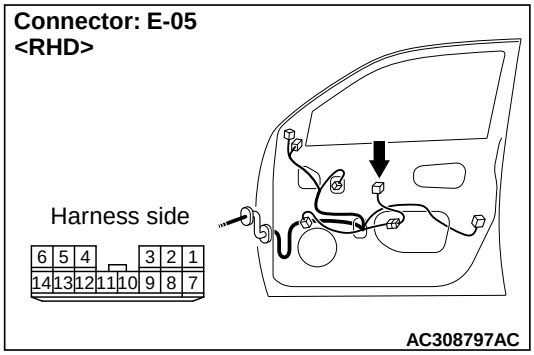

(1) Remove the power window main switch, and measure at the wiring harness side.
(2) Ignition switch: ON position

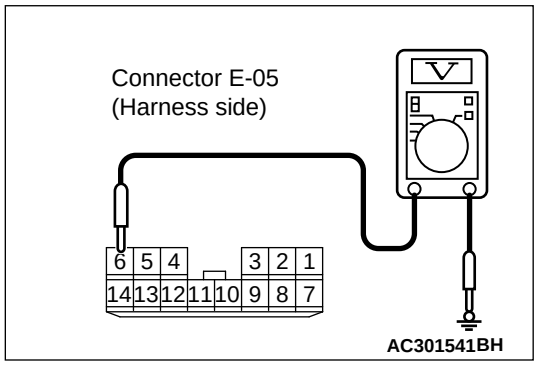

(3) Voltage between E-05 power window main switch connector terminal No.6 and body earth

OK: System voltage

Q: Is the check result normal?
YES : Go to Step 8.
NO : Go to Step 6.

Step 6. Connector check: C-208 power window relay connector

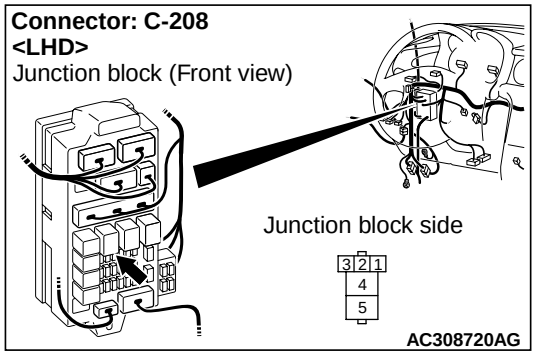

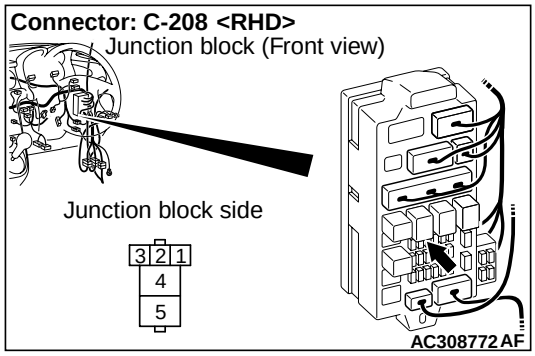

Q: Is the check result normal?
YES : Go to Step 7.
NO : Repair the defective connector.

Step 7. Check the wiring harness between C-208 power window relay connector terminal No.4 and E-05 power window main switch connector terminal No.6.

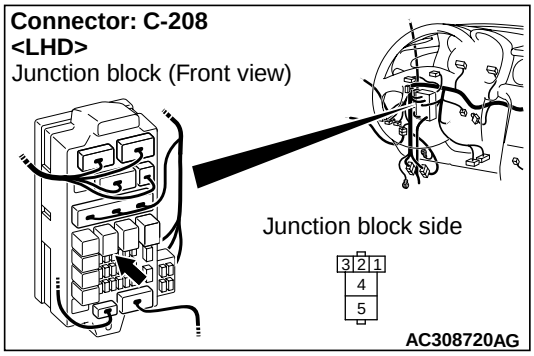

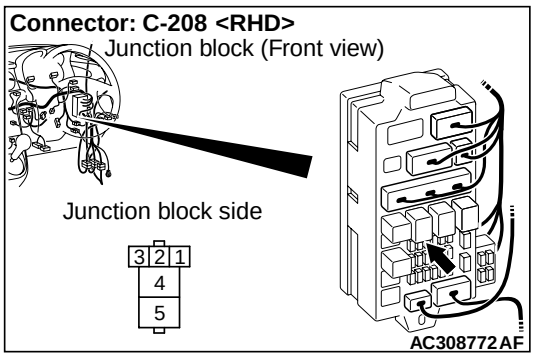

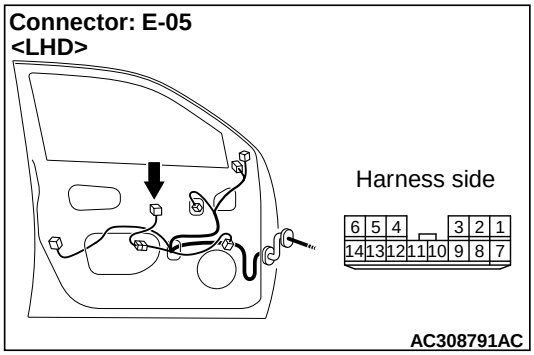

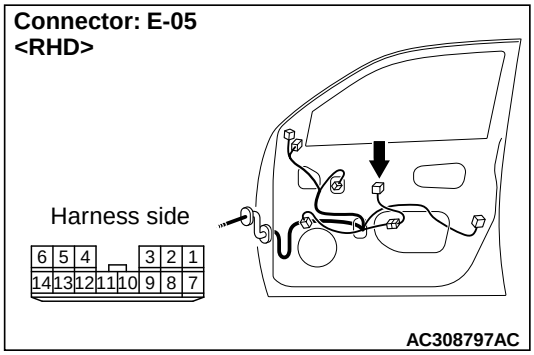

NOTE:

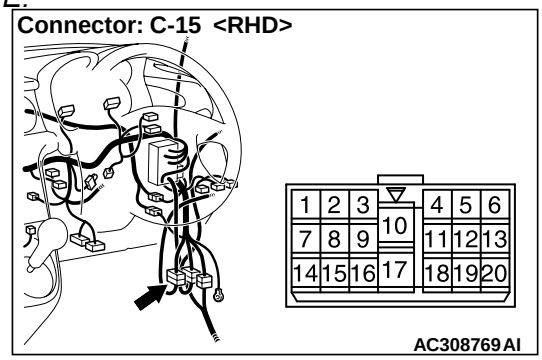

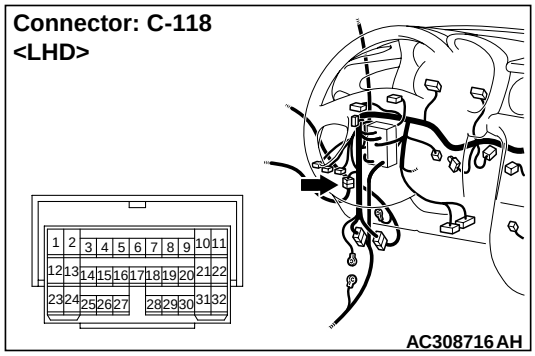

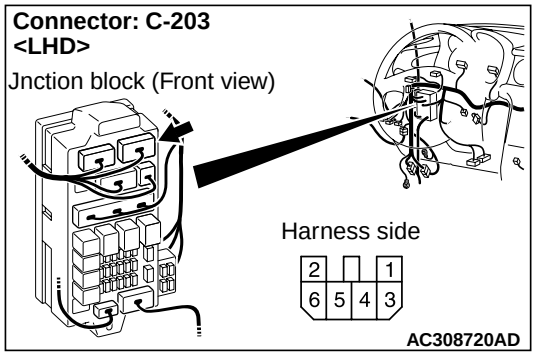

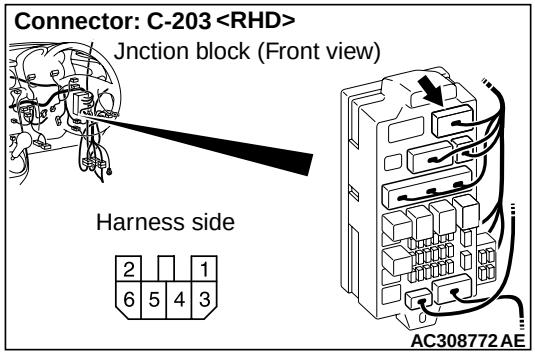

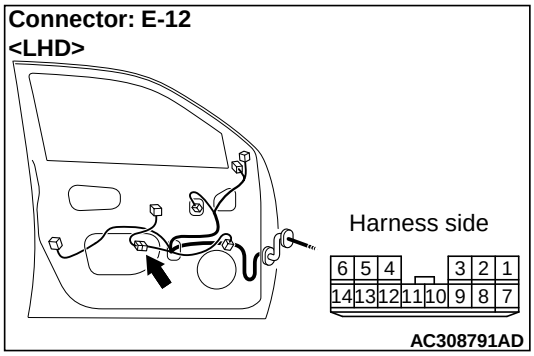

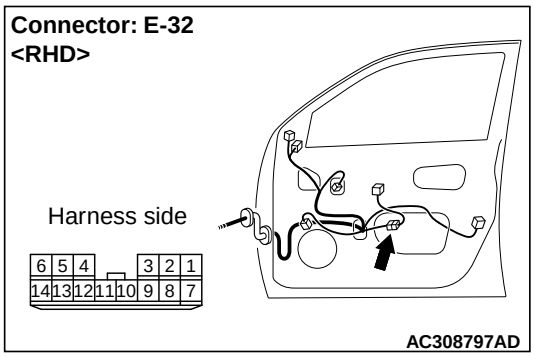

Prior to the wiring harness inspection, check intermediate connectors C-118 <L.H. drive vehicles>, E-12 <L.H. drive vehicles>, C-15 <R.H. drive vehicles>, E-32 <R.H. drive vehicles> and junction block connector C-203, and repair if necessary.

- Check the power supply line for open circuit.

Q: Is the check result normal?

YES : The trouble can be an intermittent malfunction (Refer to GROUP 00 – How to Cope with Intermittent Malfunction P.00-6).

NO : Repair the wiring harness.

Step 8. Measure the resistance at the E-05 power window main switch connector.

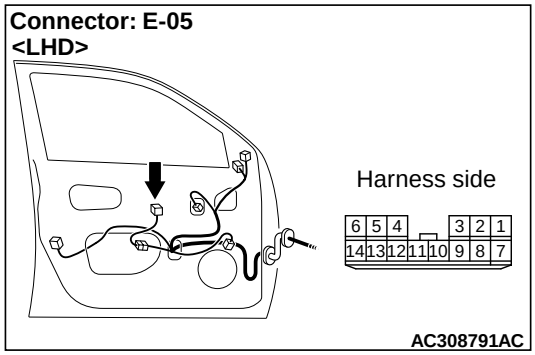

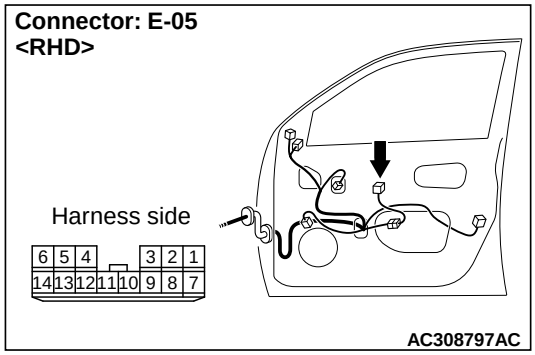

(1) Remove the power window main switch, and measure at the wiring harness side.

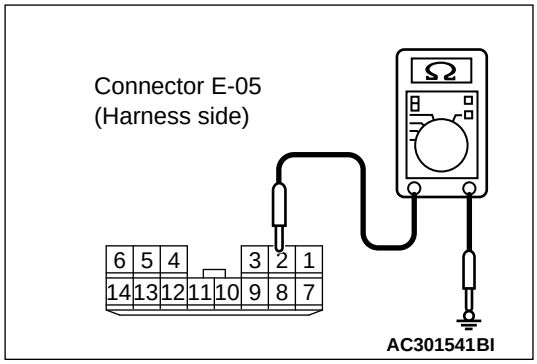

(2) Resistance between E-05 power window main switch connector terminal No.2 and body earth

OK: 2Ω or less

Q: Is the check result normal?

YES : Go to Step 10.

NO : Go to Step 9.

Step 9. Check the wiring harness between E-05 power window main switch connector terminal No.2 and body earth.

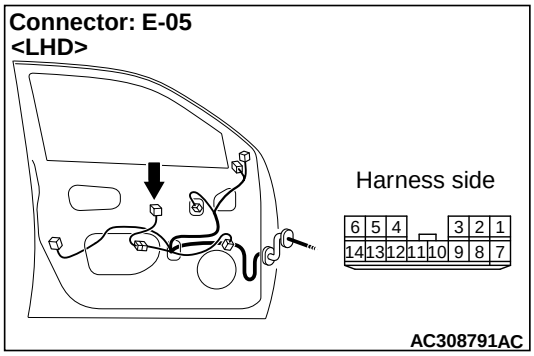

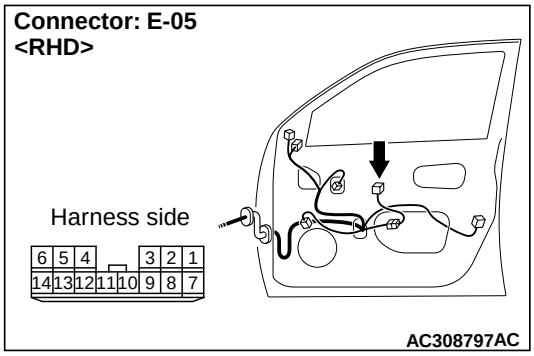

NOTE:

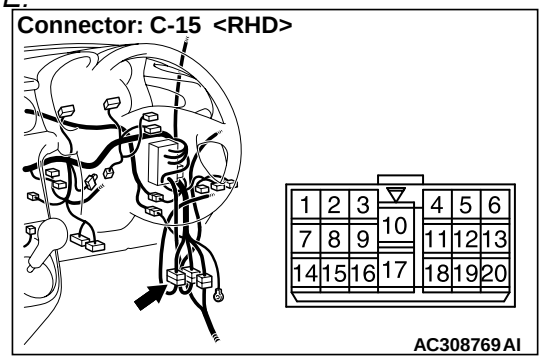

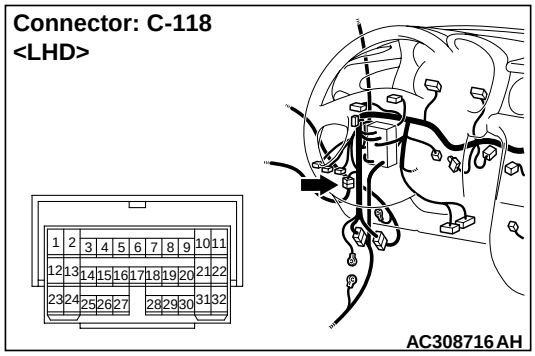

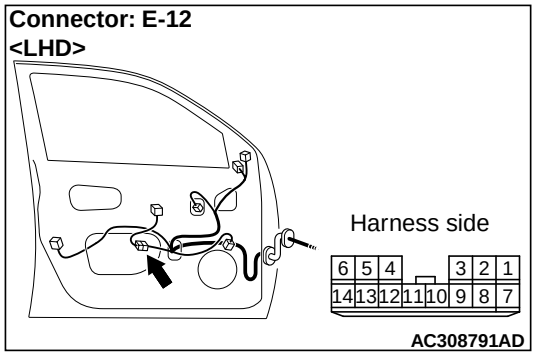

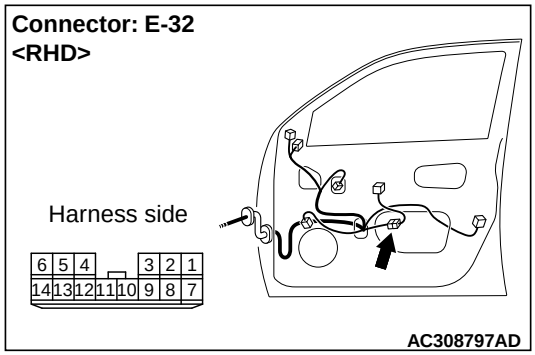

Prior to the wiring harness inspection, check intermediate connectors C-118 <L.H. drive vehicles>, E-12 <L.H. drive vehicles>, C-15 <R.H. drive vehicles> and E-32 <R.H. drive vehicles>, and repair if necessary.

- Check the earth wires for open circuit.

Q: Is the check result normal?

YES : The trouble can be an intermittent malfunction (Refer to GROUP 00 – How to Cope with Intermittent Malfunction P.00-6).

NO : Repair the wiring harness.

Step 10. Retest the system.

Check that each switch signal is received by operating the power window main switch.

Q: Is the check result normal?

YES : The trouble can be an intermittent malfunction (Refer to GROUP 00 – How to Cope with Intermittent Malfunction P.00-6).

NO : Replace the power window main switch.

INSPECTION PROCEDURE N-9: The key reminder switch signal is not received.

⚠ CAUTION

Whenever the ECU is replaced, ensure that the input signal circuit is normal.

Key Reminder Switch Input Circuit

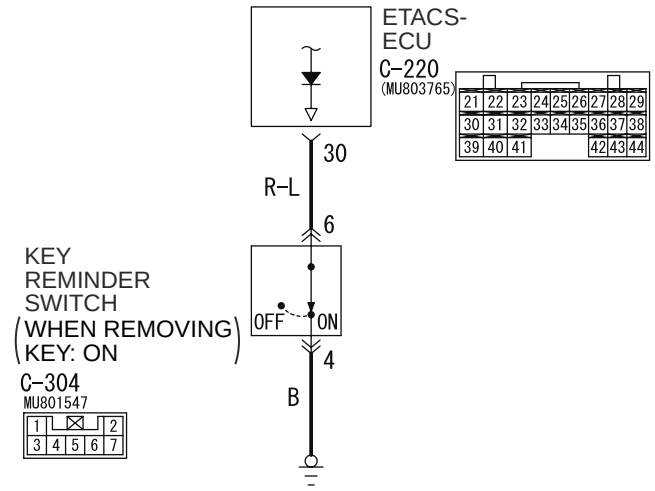

Wire colour code
B : Black LG : Light green G : Green L : Blue W : White Y : Yellow SB : Sky blue
BR : Brown O : Orange GR : Gray R : Red P : Pink V : Violet

W3Z10E34AA

COMMENTS ON TROUBLE SYMPTOM

Input signal from the key reminder switch is used to operate the functions below. If the signal is abnormal, these functions will not work normally.

- Key reminder function
- Keyless entry system
- Ignition key cylinder illumination lamp
- Room lamps

POSSIBLE CAUSES

- Malfunction of the key reminder switch
- Malfunction of the ETACS-ECU
- Damaged harness wires and connectors

DIAGNOSTIC PROCEDURE

Step 1. Connector check: C-304 key reminder switch connector

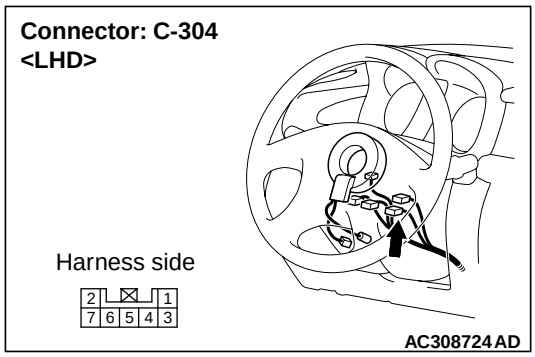

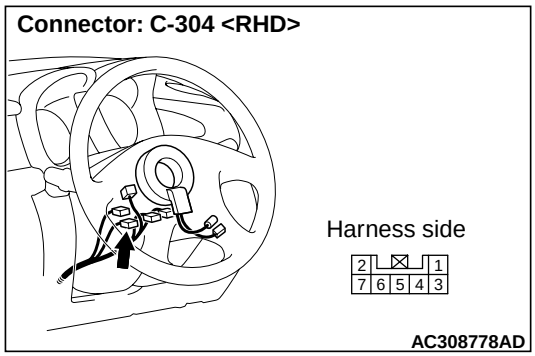

Q: Is the check result normal?
YES : Go to Step 2.
NO : Repair the defective connector.

Step 2. Check the key reminder switch.

Refer to GROUP 54A – Ignition switch P.54A-105.

Q: Is the check result normal?
YES : Go to Step 3.
NO : Replace the key reminder switch.

Step 3. Measure the resistance at the C-304 key reminder switch connector.

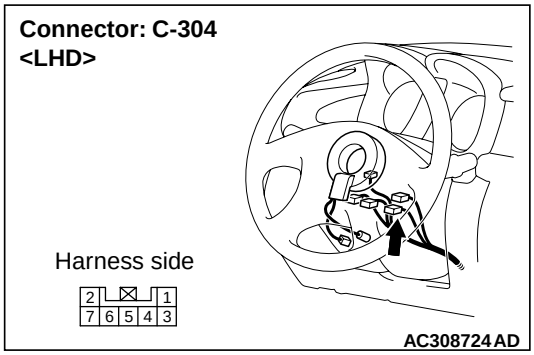

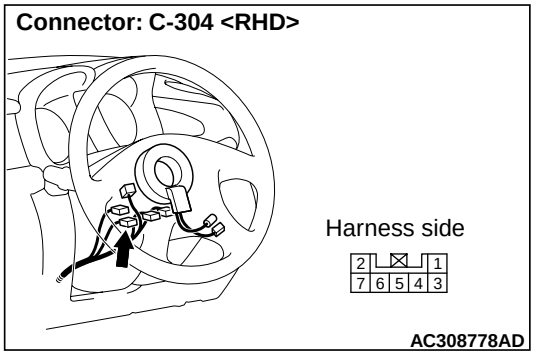

(1) Disconnect the connector, and measure at the wiring harness side.

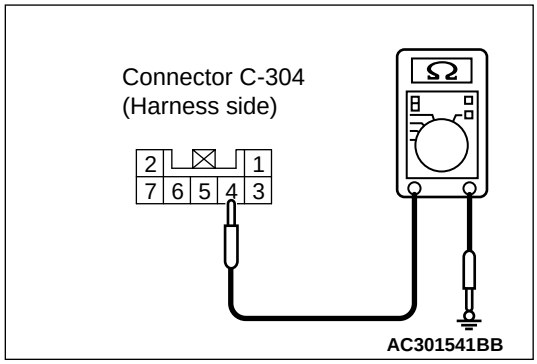

(2) Resistance between C-304 key reminder switch connector terminal No.4 and body earth

OK: 2 Ω or less

Q: Is the check result normal?
YES : Go to Step 5.
NO : Go to Step 4.

Step 4. Check the wiring harness between C-304 key reminder switch connector terminal No.4 and the body earth.

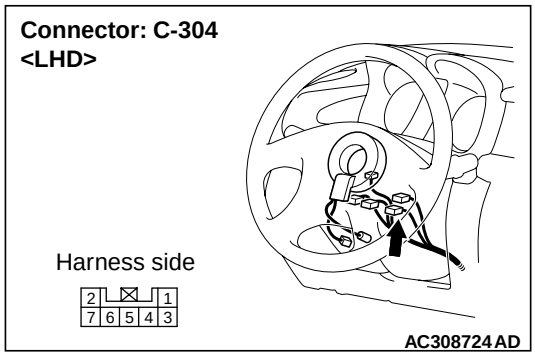

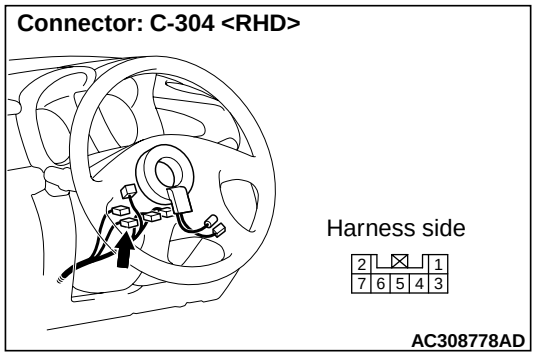

- Check the earth wires for open circuit.

Q: Is the check result normal?
YES : The trouble can be an intermittent malfunction (Refer to GROUP 00 – How to Cope with Intermittent Malfunction P.00-6).
NO : Repair the wiring harness.

Step 5. Connector check: C-220 ETACS-ECU connector

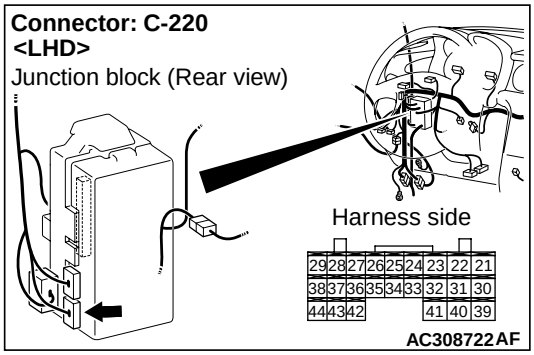

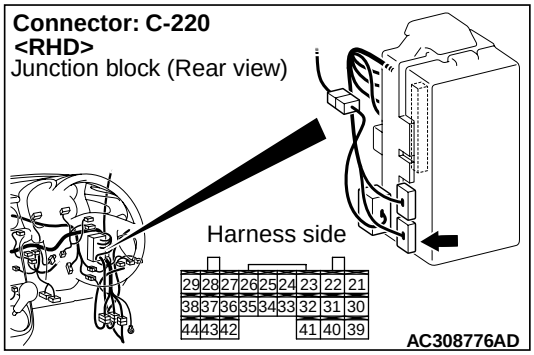

Q: Is the check result normal?
YES : Go to Step 6.
NO : Repair the defective connector.

Step 6. Check the wiring harness between C-304 key reminder switch connector terminal No.6 and C-220 ETACS-ECU connector terminal No.30.

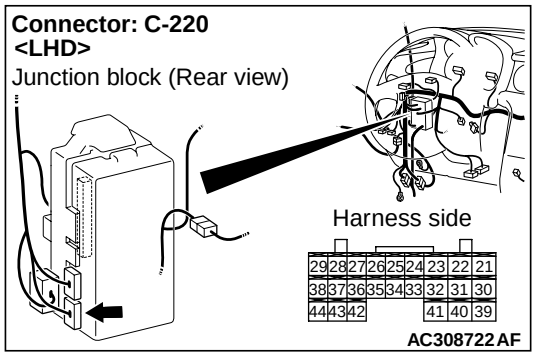

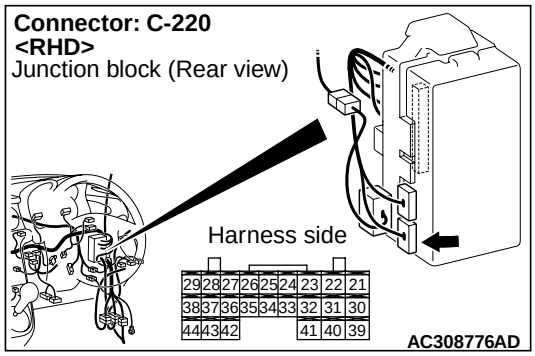

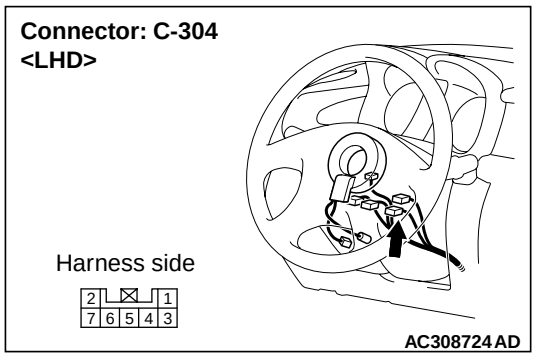

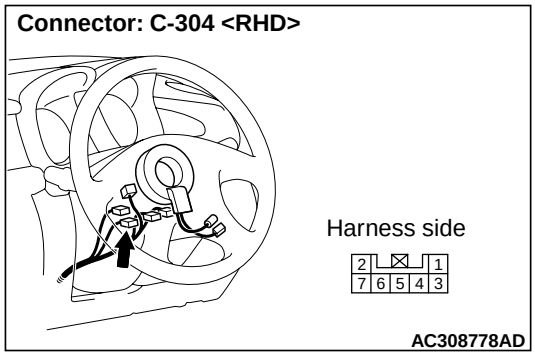

- Check the input line for open circuit.

Q: Is the check result normal?

YES : Go to Step 7.
NO : Repair the wiring harness.

Step 7. Retest the system.
Check that the key reminder switch signal is received normally.

Q: Is the check result normal?
YES : The trouble can be an intermittent malfunction (Refer to GROUP 00 – How to Cope with Intermittent Malfunction P.00-6).
NO : Replace the ETACS-ECU.

INSPECTION PROCEDURE N-10: The hazard warning lamp switch signal is not received.

⚠ CAUTION

Whenever the ECU is replaced, ensure that the input signal circuit is normal.

Hazard Warning Lamp Switch Input Circuit

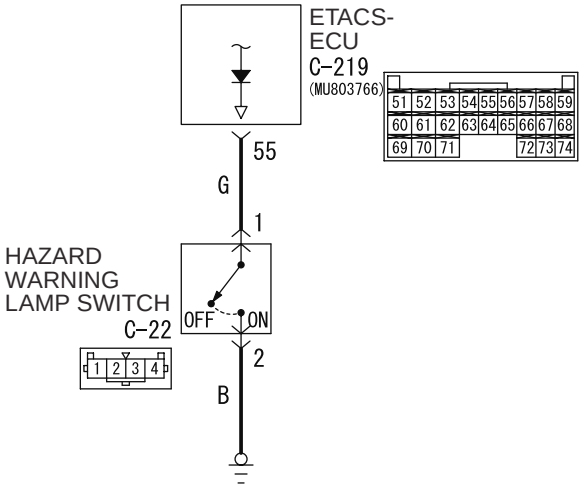

Wire colour code
B : Black LG : Light green G : Green L : Blue W : White Y : Yellow SB : Sky blue
BR : Brown O : Orange GR : Gray R : Red P : Pink V : Violet

W3Z10E35AA

COMMENTS ON TROUBLE SYMPTOM

Input signal from the hazard warning lamp switch is used to operate the functions below. If the signal is abnormal, these functions will not work normally.

- Keyless entry system (encrypted code registration)
- Hazard warning lamp

POSSIBLE CAUSES

- Malfunction of the hazard warning lamp switch
- Malfunction of the ETACS-ECU
- Damaged harness wires and connectors

DIAGNOSTIC PROCEDURE

Step 1. Connector check: C-22 hazard warning lamp switch connector

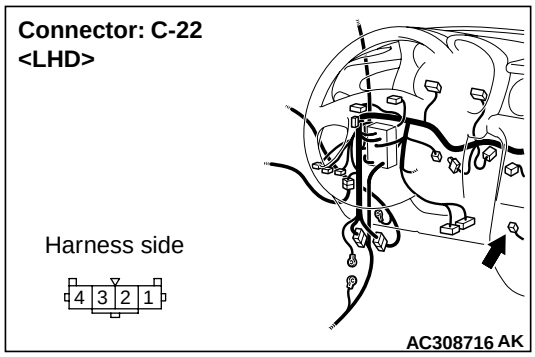

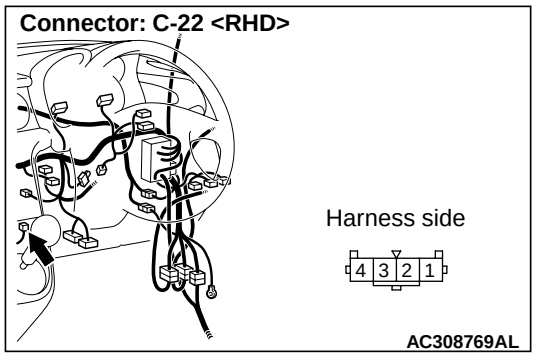

Q: Is the check result normal?
YES : Go to Step 2.
NO : Repair the defective connector.

Step 2. Check the hazard warning lamp switch.

Refer to GROUP 54A – Hazard warning lamp switch P.54A-93.

Q: Is the check result normal?
YES : Go to Step 3.
NO : Replace the hazard warning lamp switch.

Step 3. Measure the resistance at the C-22 hazard warning lamp switch connector.

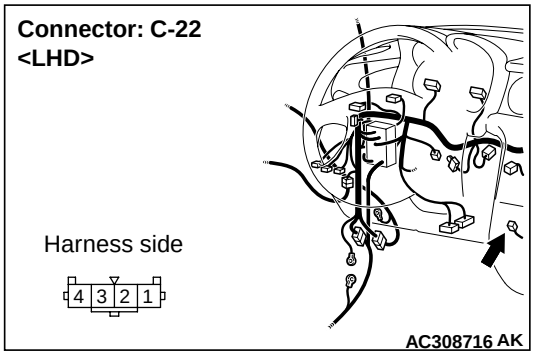

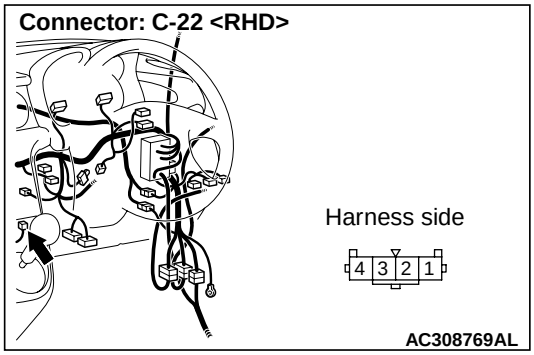

(1) Disconnect the connector, and measure at the wiring harness side.

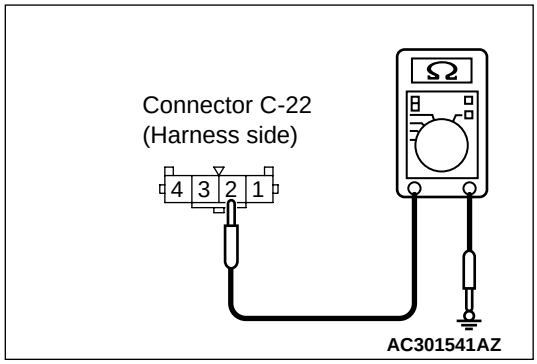

(2) Resistance between C-22 hazard warning lamp switch connector terminal No.2 and body earth

OK: 2 Ω or less

Q: Is the check result normal?
YES : Go to Step 5.
NO : Go to Step 4.

Step 4. Check the wiring harness between C-22 hazard warning lamp switch connector terminal No.2 and the body earth.

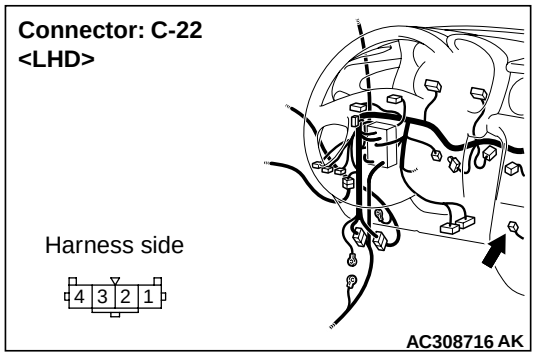

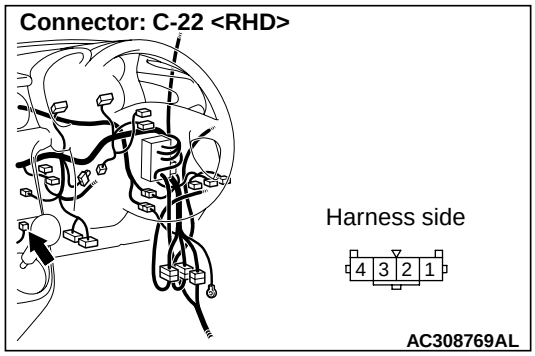

- Check the earth wires for open circuit.

Q: Is the check result normal?
YES : The trouble can be an intermittent malfunction (Refer to GROUP 00 – How to Cope with Intermittent Malfunction P.00-6).
NO : Repair the wiring harness.

Step 5. Connector check: C-219 ETACS-ECU connector

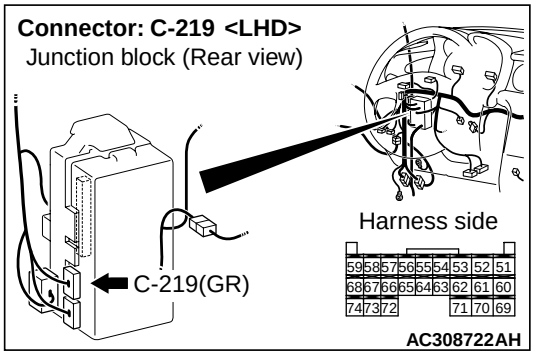

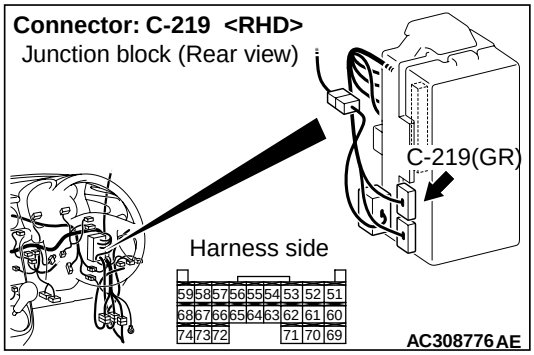

Q: Is the check result normal?
YES : Go to Step 6.
NO : Repair the defective connector.

Step 6. Check the wiring harness between C-219 ETACS-ECU connector terminal No.55 and C-22 hazard warning lamp switch connector terminal No.1.

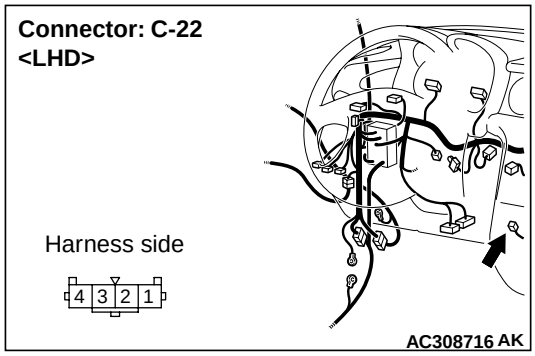

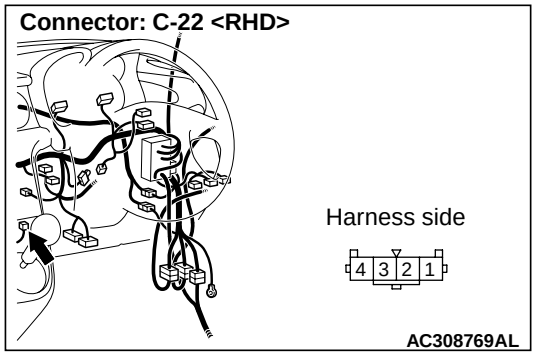

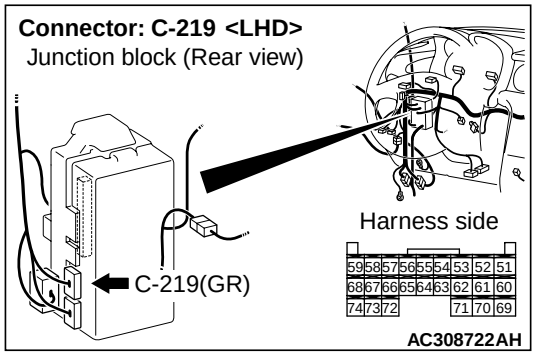

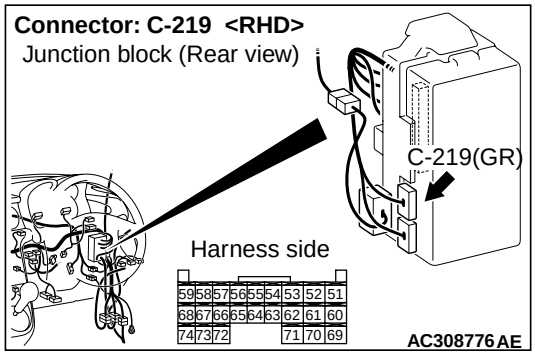

- Check the input line for open circuit.

Q: Is the check result normal?

YES : Go to Step 7.
NO : Repair the wiring harness.

Step 7. Retest the system.
Check that the hazard warning lamp switch signal is received normally.

Q: Is the check result normal?
YES : The trouble can be an intermittent malfunction (Refer to GROUP 00 – How to Cope with Intermittent Malfunction P.00-6).
NO : Replace the ETACS-ECU.

INSPECTION PROCEDURE N-11: All the door switch signals are not received. <L.H. drive vehicles>

⚠ CAUTION

Whenever the ECU is replaced, ensure that the input signal circuit is normal.

All Door Switches Input Circuit

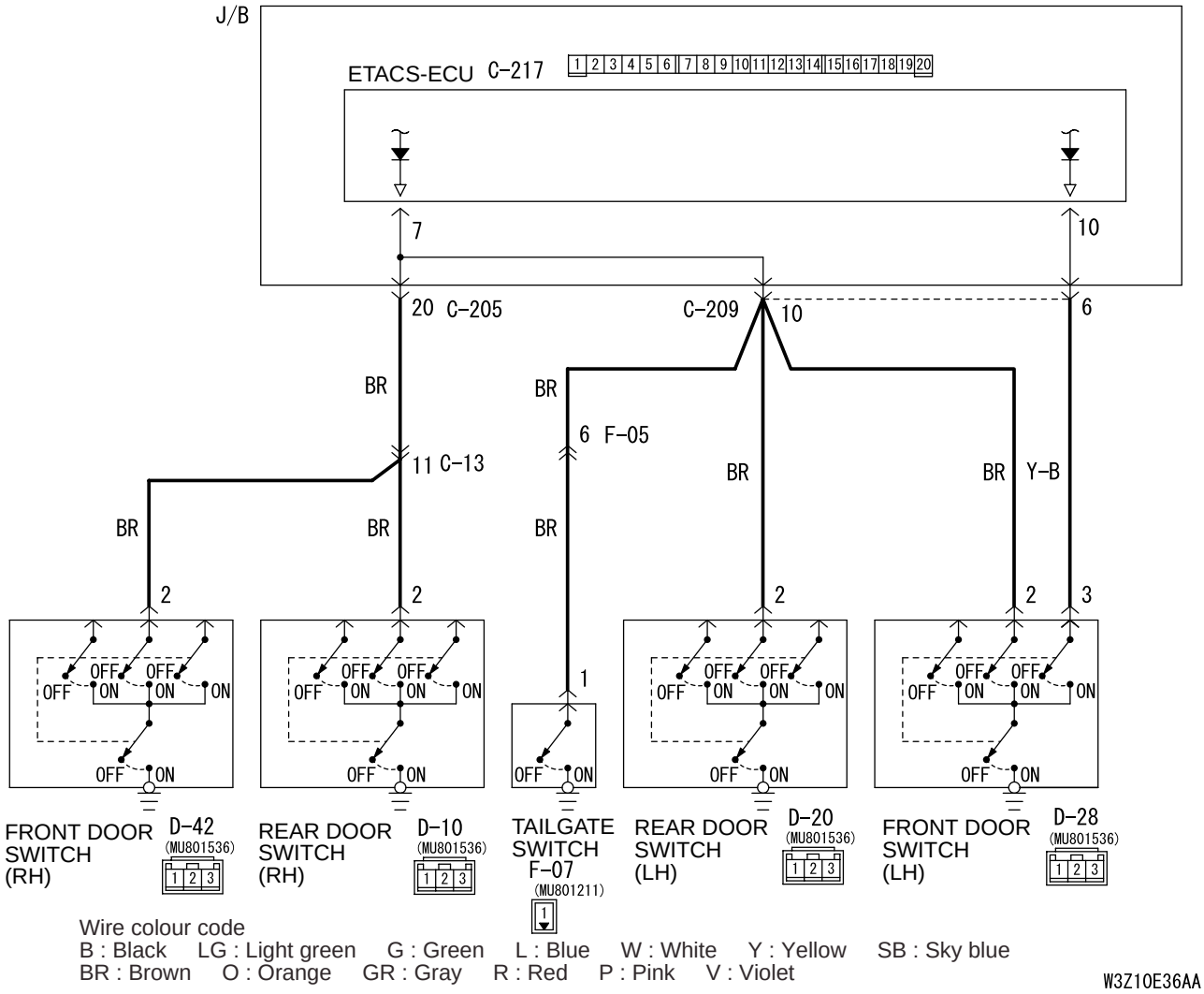

COMMENTS ON TROUBLE SYMPTOM

Input signals from all the door switches are used to operate the functions below. If the signal(s) are abnormal, these functions will not work normally.

- Keyless entry system
- Room lamps

POSSIBLE CAUSES

- Malfunction of the door switches
- Malfunction of the ETACS-ECU
- Damaged harness wires and connectors

DIAGNOSTIC PROCEDURE

Step 1. Pulse check

Check the input signal from the driver's door switch.

System switch	Check condition
Driver's door switch	When the driver's door is opened

OK: The MUT-II/III sounds or the voltmeter needle fluctuates.

Q: Is the check result normal?

YES : Go to Step 2.
NO : Refer to inspection procedure N-4 "The front door switch signal is not received <L.H. drive vehicles>P.54B-315."

Step 2. Connector check: D-28 <front: LH> D-42 <front: RH>, D-10 <rear: RH> or D-20 <rear: LH> door switch connectors or F-07 <tailgate> tailgate switch connector, and C-217 ETACS-ECU connector

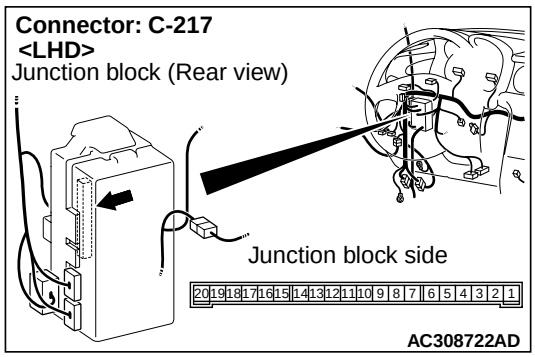

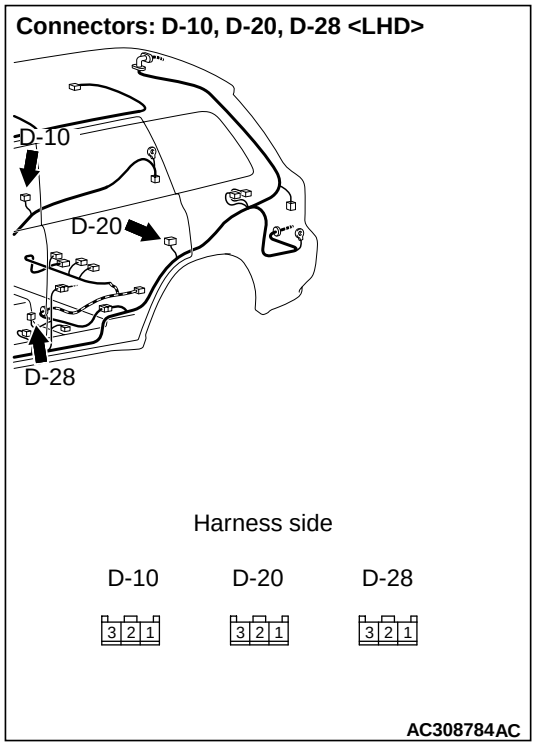

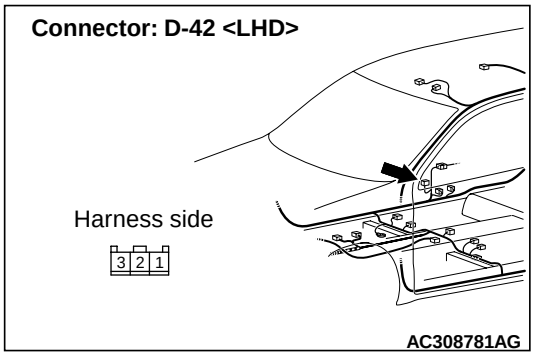

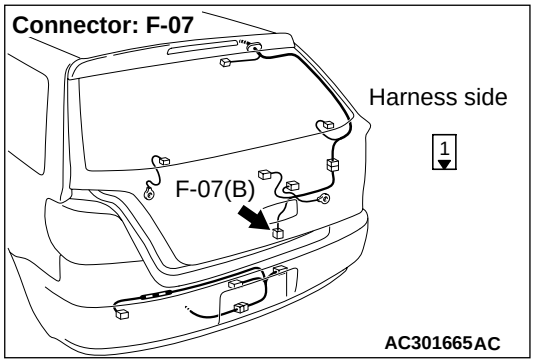

Q: Is the check result normal?
YES : Go to Step 3.
NO : Repair the defective connector.

Step 3. Check the installation condition.
Check that the door switch is installed on the body correctly.

Q: Is the check result normal?
YES : Go to Step 4.
NO : Correct the installation condition.

Step 4. Check the door switch.
Refer to GROUP 42 – Door P.42-30.

Q: Is the check result normal?
YES : Go to Step 5.
NO : Replace the door switch.

Step 5. Check the wiring harness from terminal No.2 of the D-28 <front: LH>, D-42 <front: RH>, D-10 <rear: RH> or D-20 <rear LH> door switch connector or terminal No.1 of the F-07 <tailgate> tailgate switch connector to terminal No.7 of the C-217 ETACS-ECU connector.

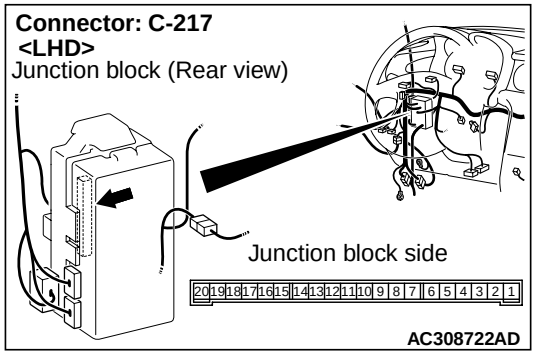

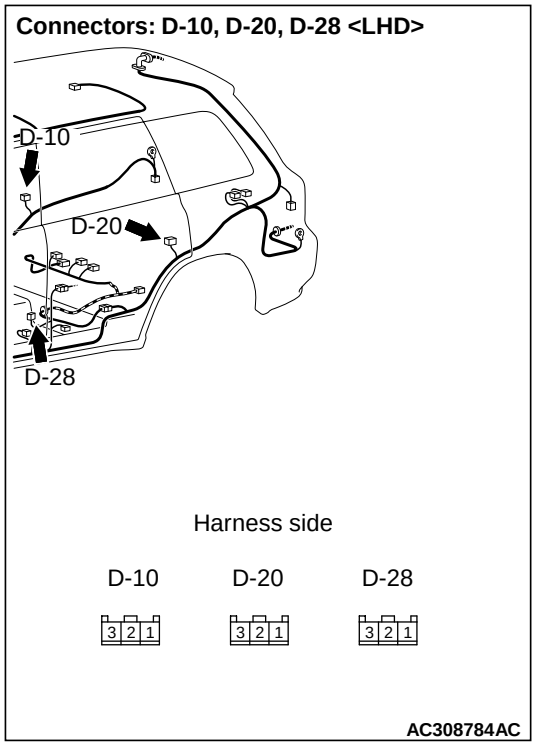

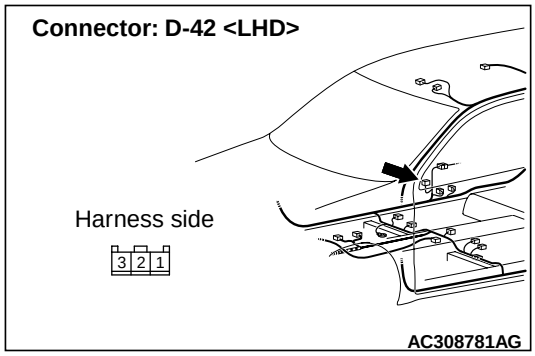

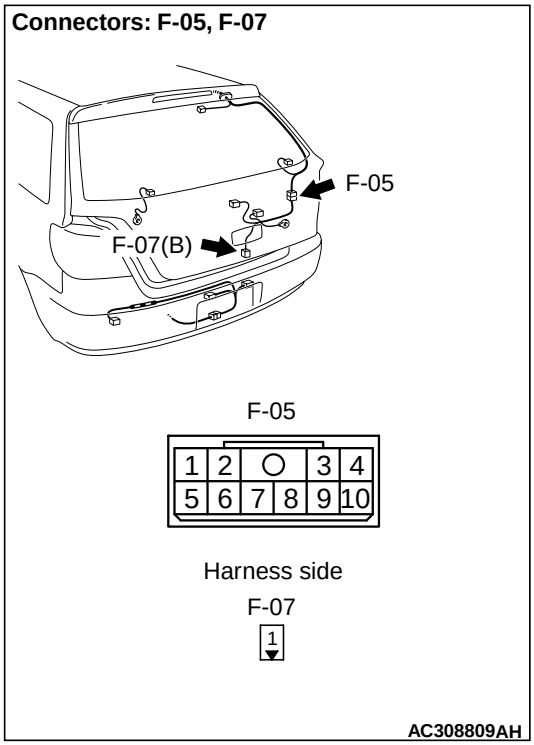

NOTE:

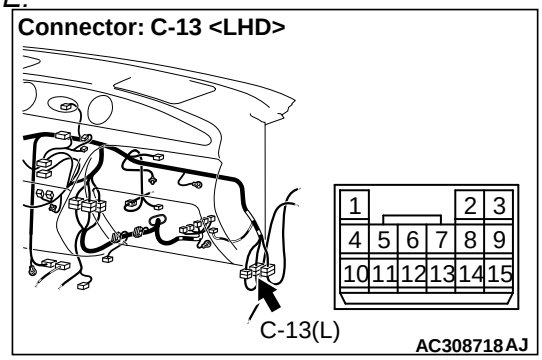

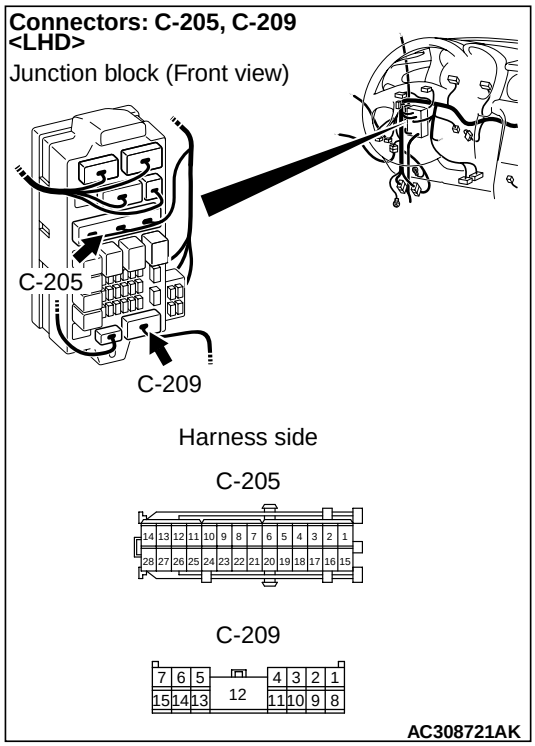

Prior to the wiring harness inspection, check intermediate connector F-05 <tailgate> or C-13 <RH> and junction block connector C-205 <RH> or C-209 <LH and tailgate>, and repair if necessary.

- Check the input line for open circuit.

Q: Is the check result normal?

YES : Go to Step 6.

NO : Repair the wiring harness between each of the door switches and the ETACS-ECU.

Step 6. Retest the system.

Check that all the driver's door switch signals are received normally.

Q: Is the check result normal?

YES : The trouble can be an intermittent malfunction (Refer to GROUP 00 – How to Cope with Intermittent Malfunction P.00-6).

NO : Replace the ETACS-ECU.

INSPECTION PROCEDURE N-11: All the door switch signals are not received. <R.H. drive vehicles>

⚠ CAUTION

Whenever the ECU is replaced, ensure that the input signal circuit is normal.

All Door Switches Input Circuit <RHD>

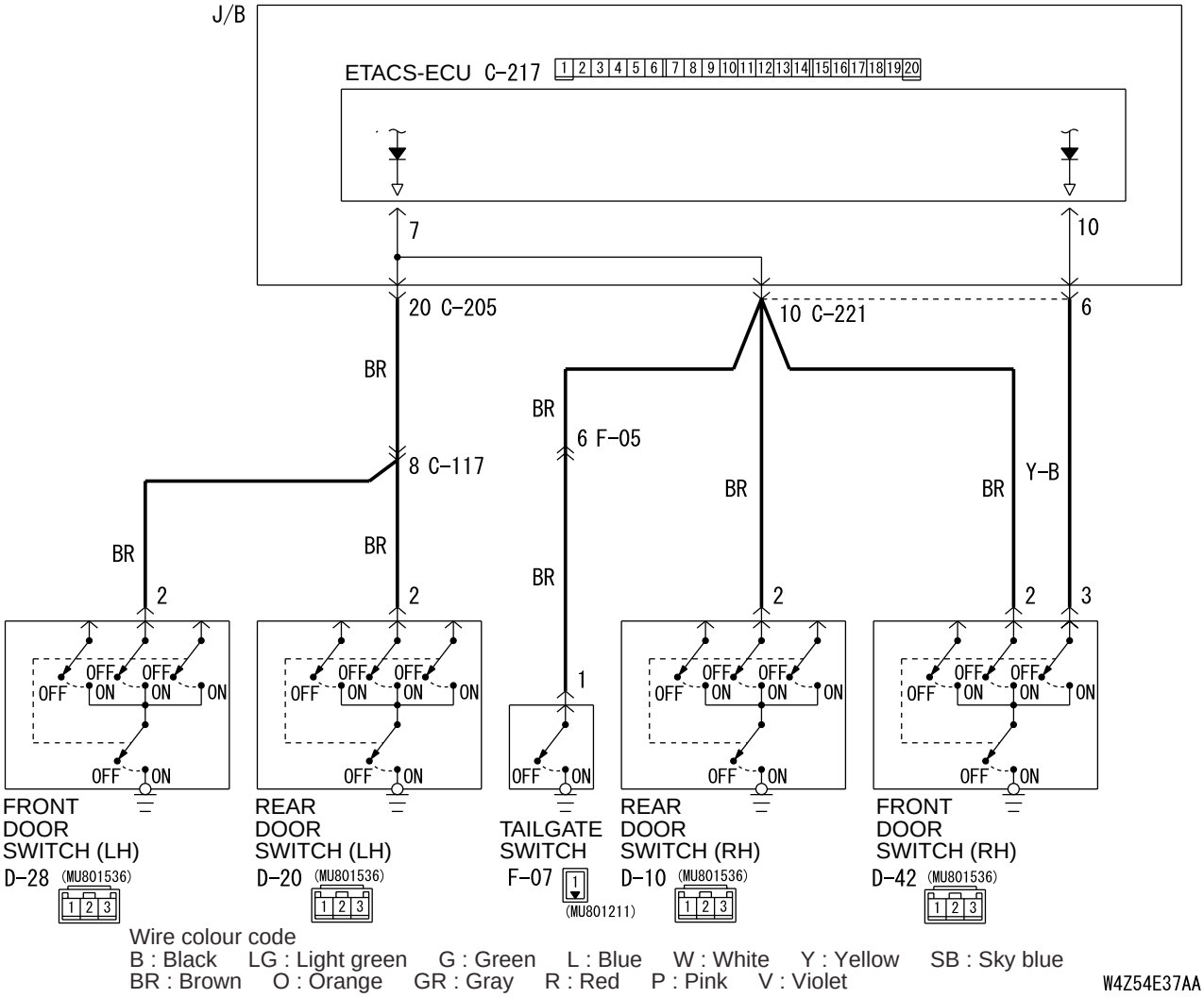

COMMENTS ON TROUBLE SYMPTOM

Input signals from all the door switches are used to operate the functions below. If the signal(s) are abnormal, these functions will not work normally.

- Keyless entry system
- Room lamps

POSSIBLE CAUSES

- Malfunction of the door switches
- Malfunction of the ETACS-ECU
- Damaged harness wires and connectors

DIAGNOSTIC PROCEDURE

Step 1. Pulse check
Check the input signal from the front door switch (RH).

System switch	Check condition
front door switch (RH)	When the driver's door is opened

OK: The MUT-II/III sounds or the voltmeter needle fluctuates.

Q: Is the check result normal?
YES : Go to Step 2.
NO : Refer to inspection procedure N-4 "The front door switch (RH) signal is not received <R.H. drive vehicles>P.54B-317."

Step 2. Connector check: D-28 <front: LH>, D-42 <front: RH>, D-10 <rear: RH> or D-20 <rear: LH> door switch connectors or F-07 <tailgate> tailgate switch connector, and C-217 ETACS-ECU connector

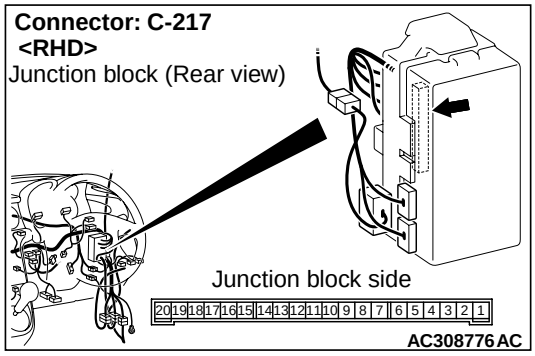

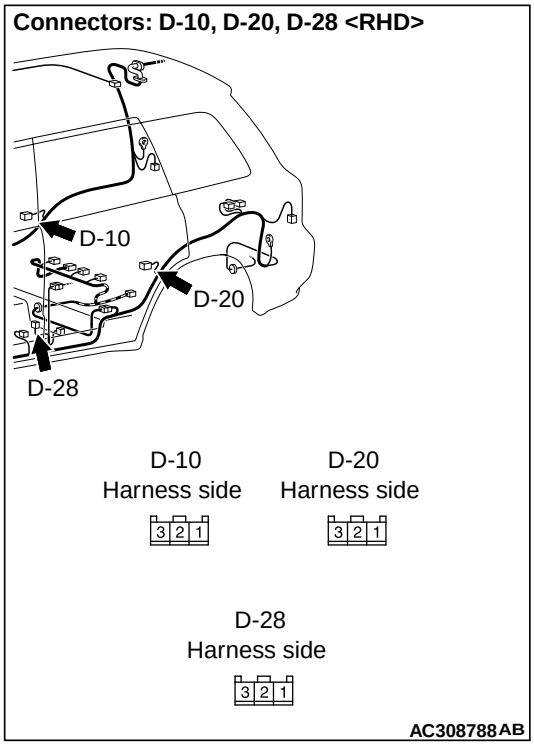

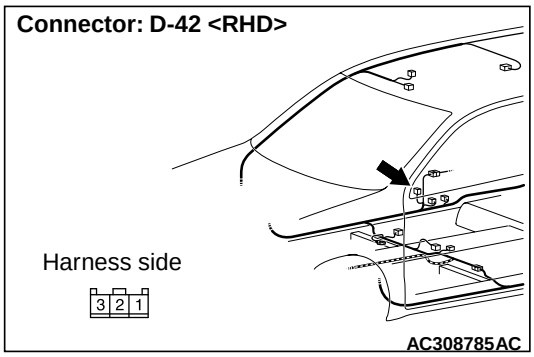

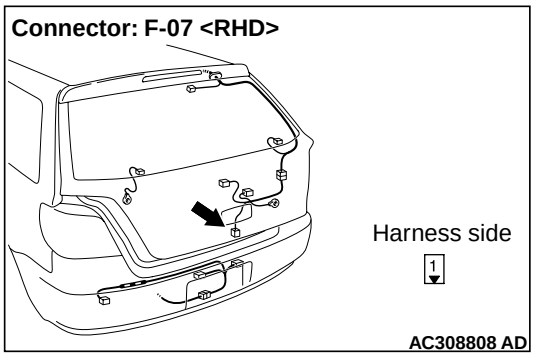

Q: Is the check result normal?
YES : Go to Step 3.
NO : Repair the defective connector.

Step 3. Check the installation condition.
Check that the door switch is installed on the body correctly.

Q: Is the check result normal?
YES : Go to Step 4.
NO : Correct the installation condition.

Step 4. Check the door switch.
Refer to GROUP 42 – Door P.42-30.

Q: Is the check result normal?
YES : Go to Step 5.
NO : Replace the door switch.

Step 5. Check the wiring harness from terminal No.2 of the D-10 <front: RH>, D-28 <front: LH>, D-42 <rear: RH> or D-20 <rear: LH> door switch connector or terminal No.1 of the F-07 <tailgate> tailgate switch connector to terminal No.7 of the C-217 ETACS-ECU connector.

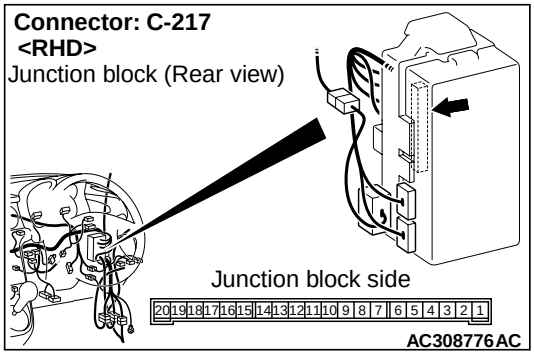

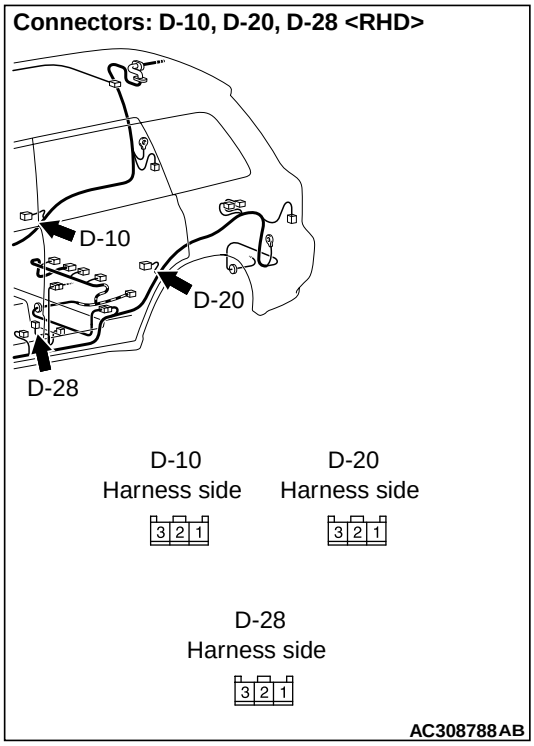

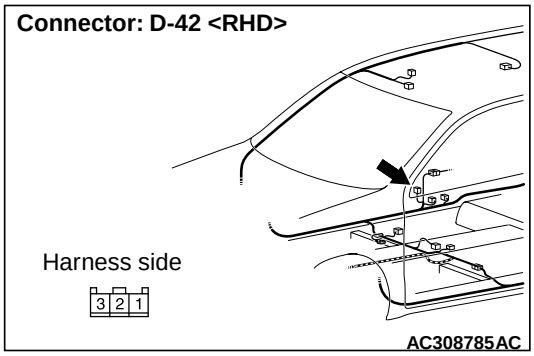

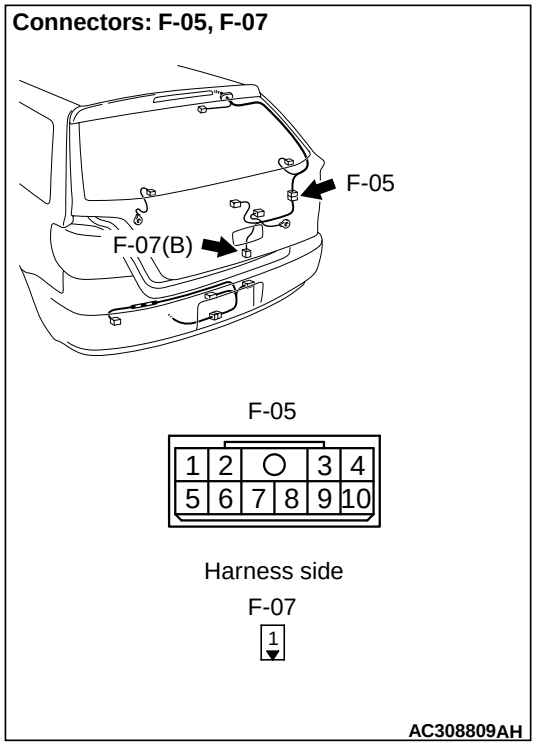

NOTE:

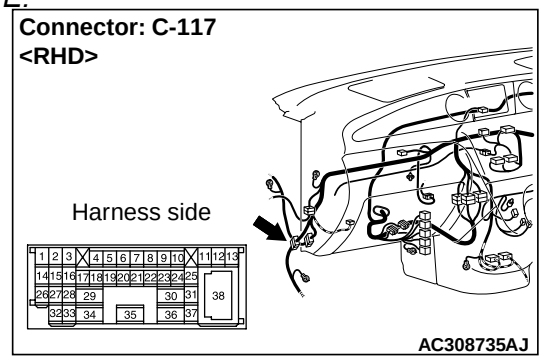

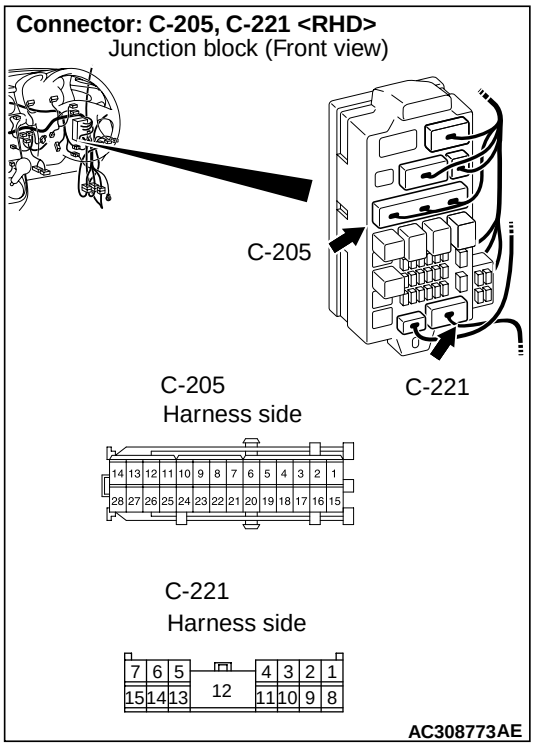

Prior to the wiring harness inspection, check intermediate connector F-05 <tailgate> or C-117 <LH> and junction block connector C-221 <RH and tailgate> or C-205 <LH>, and repair if necessary.

- Check the input line for open circuit.

Q: Is the check result normal?

YES : Go to Step 6.

NO : Repair the wiring harness between each of the door switches and the ETACS-ECU.

Step 6. Retest the system.

Check that all the driver's door switch signals are received normally.

Q: Is the check result normal?

YES : The trouble can be an intermittent malfunction (Refer to GROUP 00 – How to Cope with Intermittent Malfunction P.00-6).

NO : Replace the ETACS-ECU.

INSPECTION PROCEDURE N-12: The driver's door lock actuator switch signal is not received. <L.H. drive vehicles>

⚠ CAUTION

Whenever the ECU is replaced, ensure that the input signal circuit is normal.

Door Lock Actuator Input Circuit <LHD>

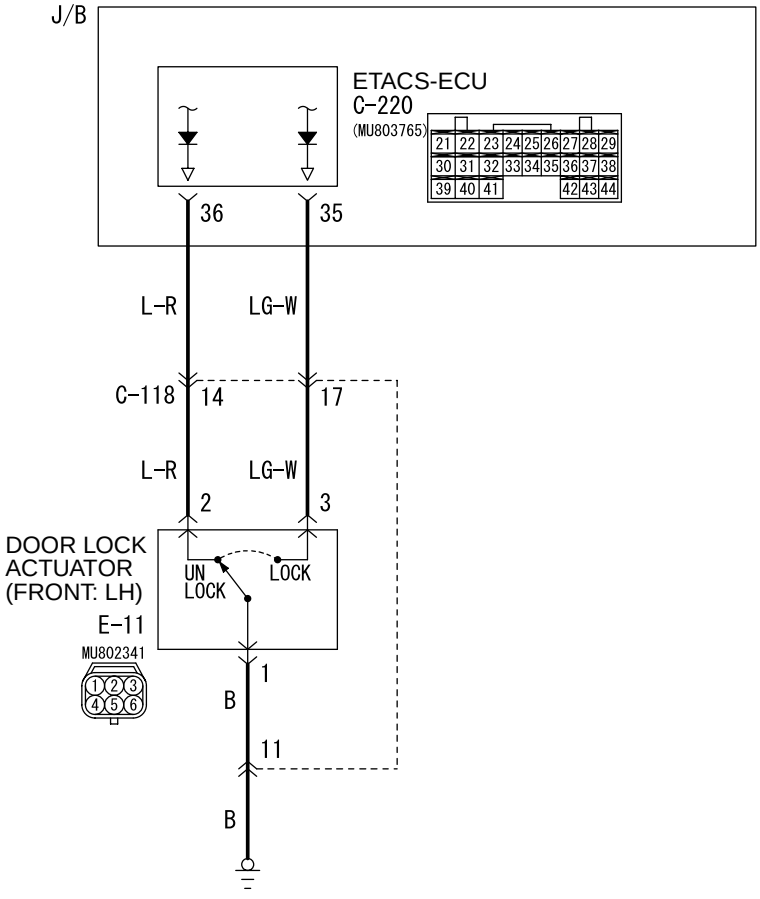

COMMENTS ON TROUBLE SYMPTOM

Input signal from the driver's door lock actuator is used to operate the functions below. If the signal is abnormal, these functions will not work normally.

- Key reminder function
- Central door locking
- Keyless entry system
- Room lamps

POSSIBLE CAUSES

- Malfunction of the front door lock actuator (LH)
- Malfunction of the ETACS-ECU
- Damaged harness wires and connectors

DIAGNOSTIC PROCEDURE

Step 1. Connector check: E-11 front door lock actuator (LH) connector

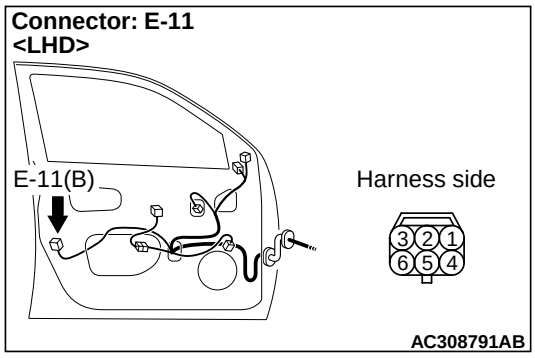

Q: Is the check result normal?
YES : Go to Step 2.
NO : Repair the defective connector.

Step 2. Check the front door lock actuator (LH).

Refer to GROUP 42 – Door P.42-35.

Q: Is the check result normal?
YES : Go to Step 3.
NO : Replace the front door lock actuator (RH).

Step 3. Measure the resistance at the E-11 front door lock actuator (LH) connector.

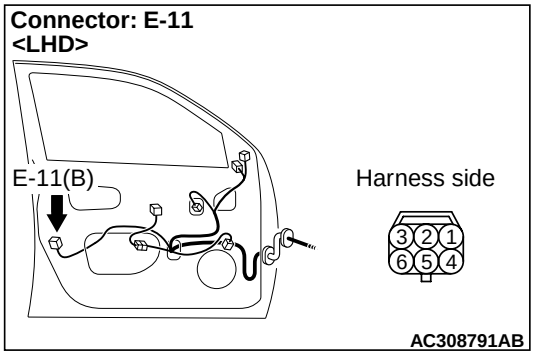

(1) Disconnect the connector, and measure at the wiring harness side.

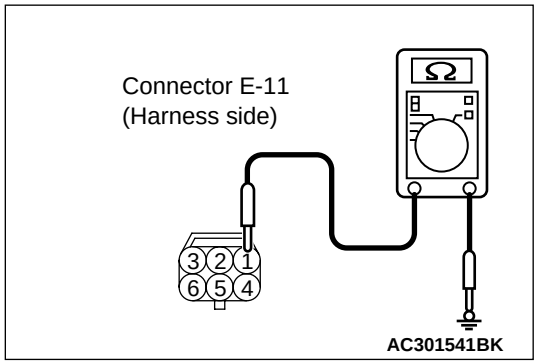

(2) Resistance between E-11 front door lock actuator (LH) connector terminal No.1 and body earth

OK: 2 Ω or less

Q: Is the check result normal?
YES : Go to Step 5.
NO : Go to Step 4.

Step 4. Check the wiring harness between E-11 front door lock actuator (LH) connector terminal No.1 and body earth

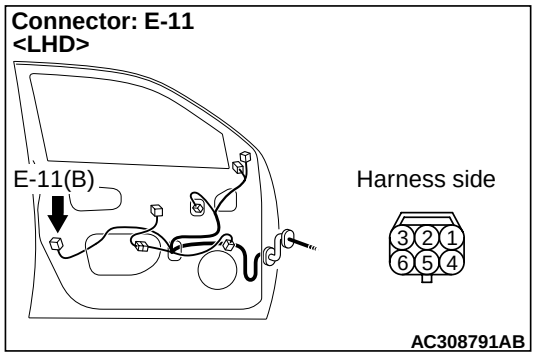

NOTE:

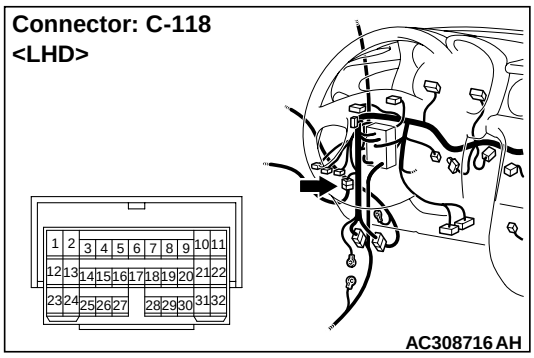

Prior to the wiring harness inspection, check intermediate connector C-118, and repair if necessary.

- Check the earth wires for open circuit.

Q: Is the check result normal?
YES : The trouble can be an intermittent malfunction (Refer to GROUP 00 – How to Cope with Intermittent Malfunction P.00-6).
NO : Repair the wiring harness.

Step 5. Connector check: C-220 ETACS-ECU connector

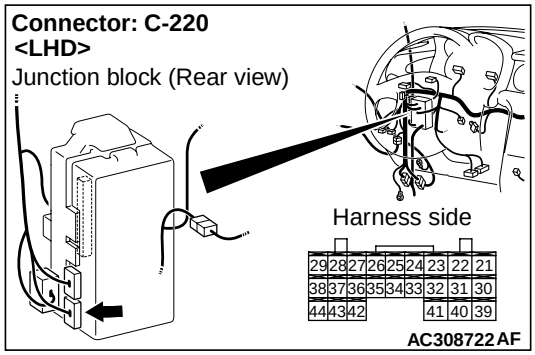

Q: Is the check result normal?
YES : Go to Step 6.
NO : Repair the defective connector.

Step 6. Check the wiring harness from E-11 front door lock actuator (LH) connector terminal Nos. 2 and 3 to C-220 ETACS-ECU connector terminal Nos. 36 and 35.

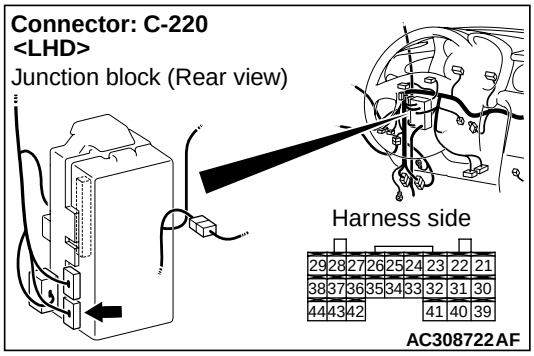

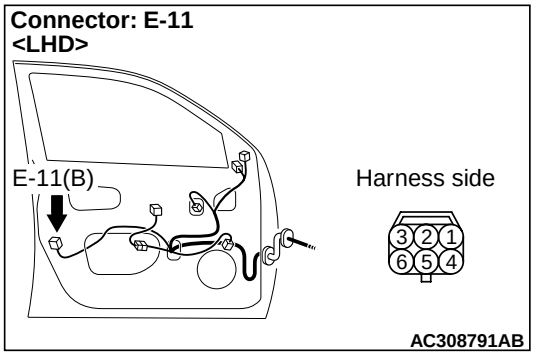

NOTE:

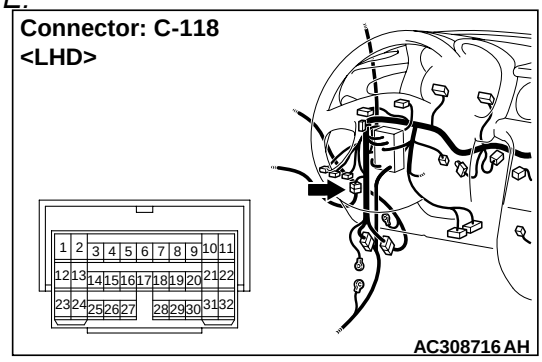

Prior to the wiring harness inspection, check intermediate connector C-118, and repair if necessary.

- Check the input line for open circuit.

Q: Is the check result normal?
YES : Go to Step 7.
NO : Repair the wiring harness.

Step 7. Retest the system.
Check that the driver's door lock actuator switch signal is received normally.

Q: Is the check result normal?

YES : The trouble can be an intermittent malfunction (Refer to GROUP 00 – How to Cope with Intermittent Malfunction P.00-6).

NO : Replace the ETACS-ECU.

INSPECTION PROCEDURE N-12: The driver's door lock actuator switch signal is not received. <R.H. drive vehicles>

⚠ CAUTION

Whenever the ECU is replaced, ensure that the input signal circuit is normal.

Door Lock Actuator Input Circuit <RHD>

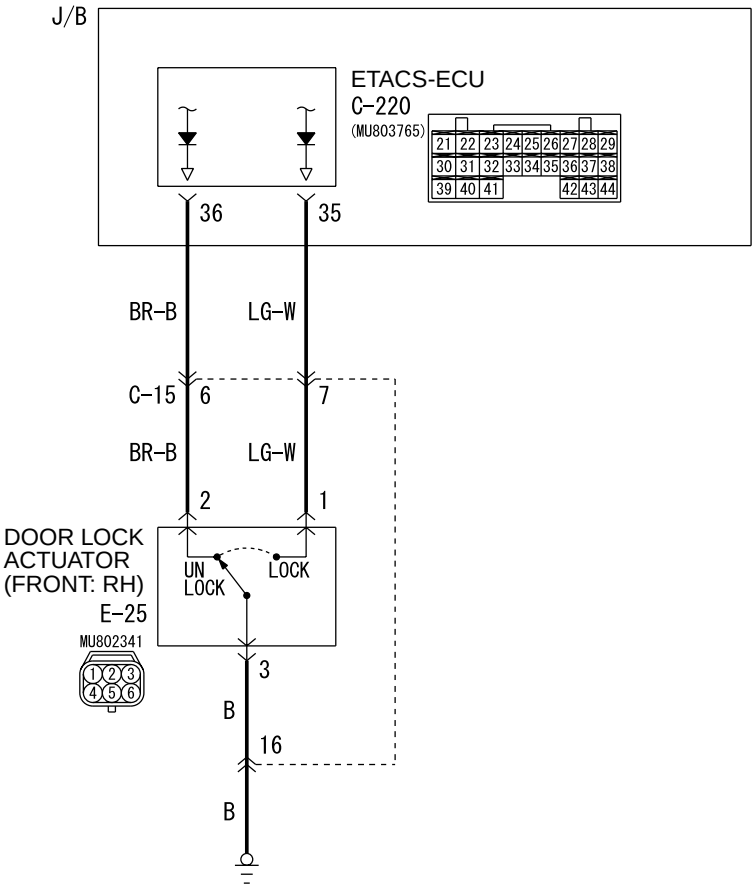

Wire colour code
B : Black LG : Light green G : Green L : Blue W : White Y : Yellow SB : Sky blue
BR : Brown O : Orange GR : Gray R : Red P : Pink V : Violet

W4Z54E38AA

COMMENTS ON TROUBLE SYMPTOM

Input signal from the front door lock actuator (RH) is used to operate the functions below. If the signal is abnormal, these functions will not work normally.

- Central door locking
- Keyless entry system
- Room lamps

POSSIBLE CAUSES

- Malfunction of the front door lock actuator (RH)
- Malfunction of the ETACS-ECU
- Damaged harness wires and connectors

DIAGNOSTIC PROCEDURE

Step 1. Connector check: E-25 front door lock actuator (RH) connector

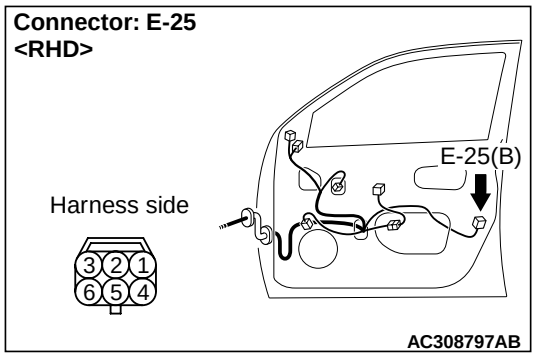

Q: Is the check result normal?
YES : Go to Step 2.
NO : Repair the defective connector.

Step 2. Check the front door lock actuator (RH).

Refer to GROUP 42 – Door P.42-35.

Q: Is the check result normal?
YES : Go to Step 3.
NO : Replace the front door lock actuator (RH).

Step 3. Resistance measurement at the E-25 front door lock actuator (RH) connector

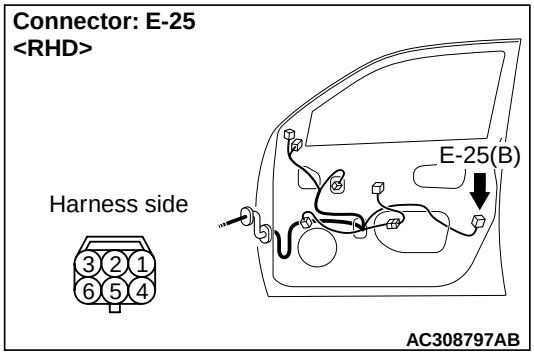

(1) Disconnect the connector, and measure at the wiring harness side.

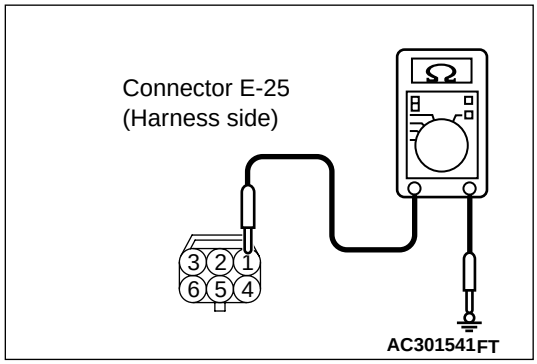

(2) Resistance between E-25 front door lock actuator (RH) connector terminal No.3 and body earth

OK: 2 Ω or less

Q: Is the check result normal?
YES : Go to Step 5.
NO : Go to Step 4.

Step 4. Check the wiring harness between E-25 front door lock actuator (RH) connector terminal No.3 and body earth

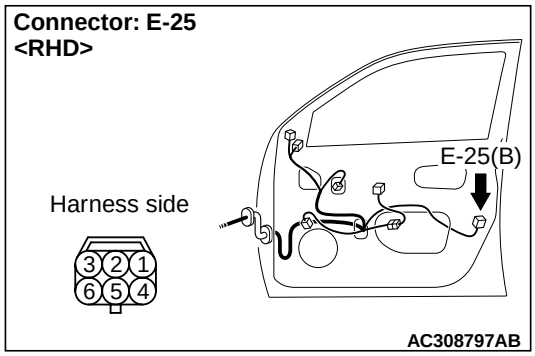

NOTE:

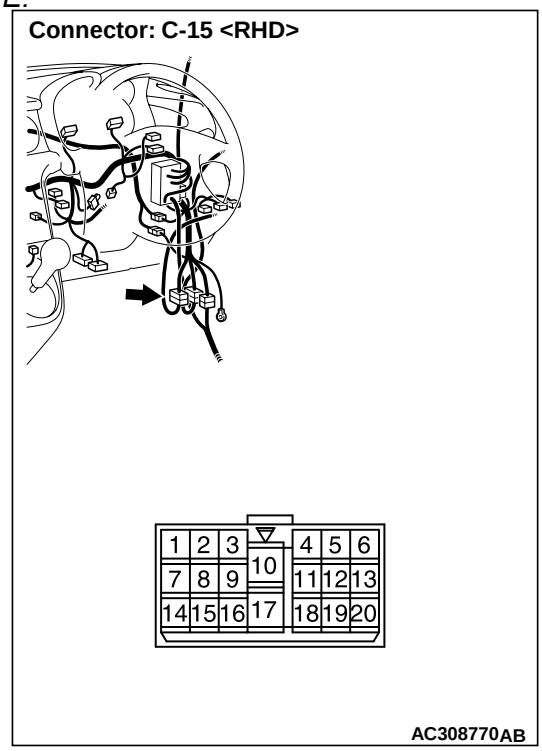

Prior to the wiring harness inspection, check intermediate connector C-15, and repair if necessary.

- Check the earth wires for open circuit.

Q: Is the check result normal?

YES : The trouble can be an intermittent malfunction (Refer to GROUP 00 – How to Cope with Intermittent Malfunction P.00-6).

NO : Repair the wiring harness.

Step 5. Connector check: C-220 ETACS-ECU connector

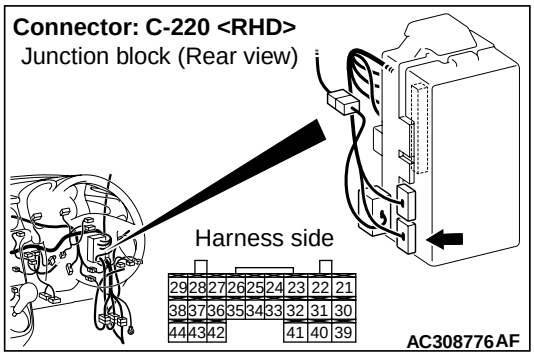

Q: Is the check result normal?

YES : Go to Step 6.

NO : Repair the defective connector.

Step 6. Check the wiring harness from E-25 front door lock actuator (RH) connector terminal Nos. 1 and 2 to C-220 ETACS-ECU connector terminal Nos. 35 and 36.

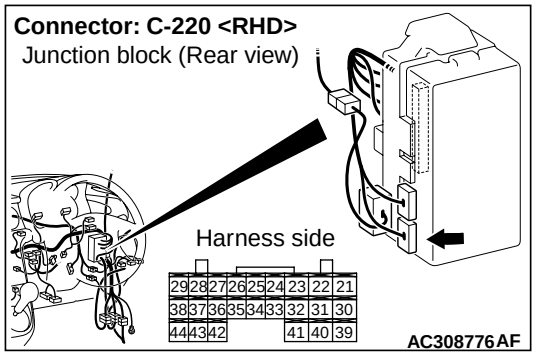

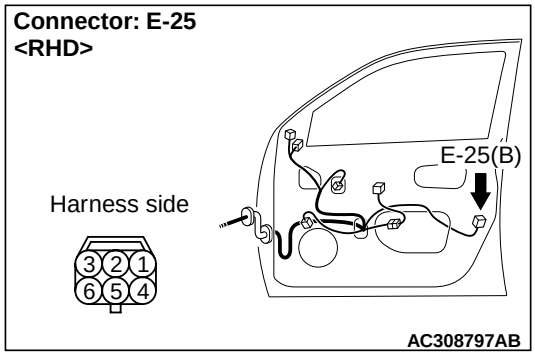

NOTE:

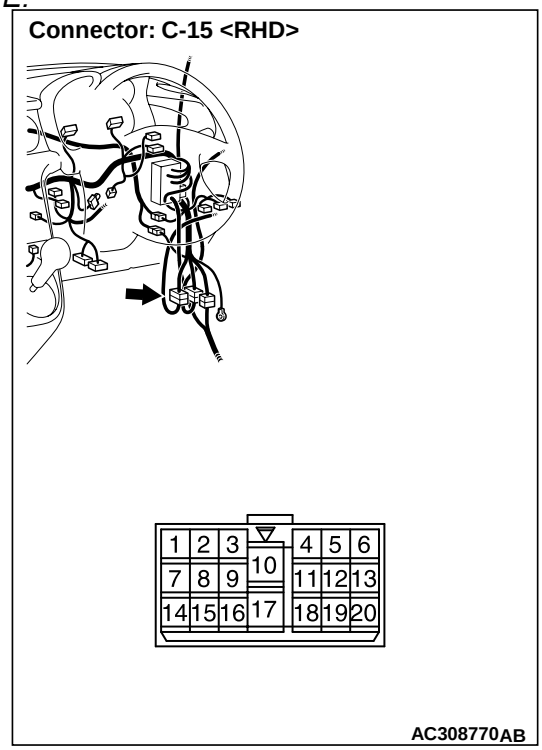

Prior to the wiring harness inspection, check intermediate connector C-15, and repair if necessary.

- Check the input line for open circuit.

Q: Is the check result normal?

YES : Go to Step 7.
NO : Repair the wiring harness.

Step 7. Retest the system.

Check that the front door lock actuator (RH) switch signal is received normally.

Q: Is the check result normal?

YES : The trouble can be an intermittent malfunction (Refer to GROUP 00 – How to Cope with Intermittent Malfunction P.00-6).
NO : Replace the ETACS-ECU.

INSPECTION PROCEDURE N-13: The vehicle speed signal is not received. <M/T>

⚠ CAUTION

Whenever the ECU is replaced, ensure that the input signal circuit is normal.

Vehicle Speed Sensor Input Circuit <M/T>

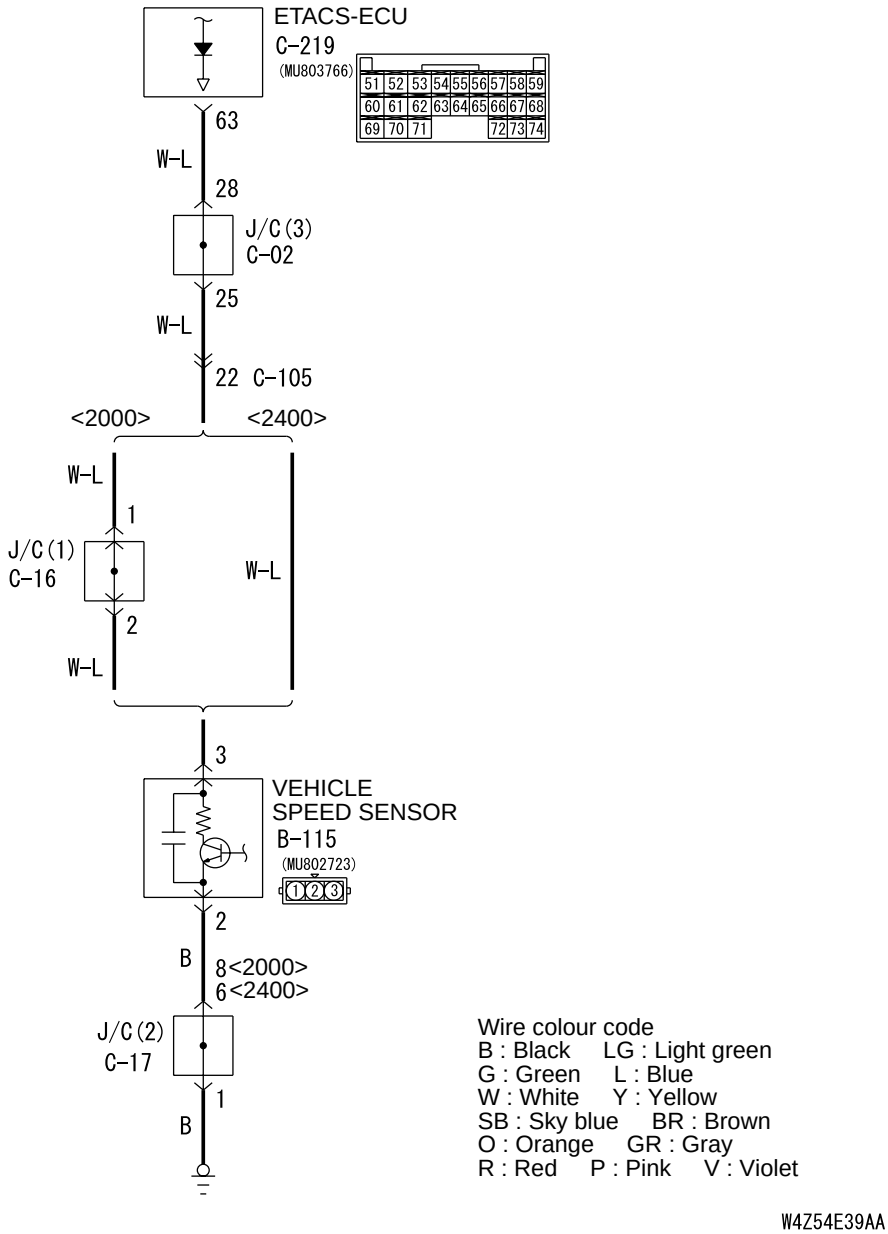

COMMENTS ON TROUBLE SYMPTOM

Vehicle speed signal is used to operate the windshield wiper (vehicle speed-dependent wiper function). If this signal is abnormal, the windshield wipers do not work normally.

POSSIBLE CAUSES

- Malfunction of the vehicles speed sensor
- Malfunction of the ETACS-ECU
- Damaged harness wires and connectors

DIAGNOSTIC PROCEDURE

Step 1. Check the speedometer.
Check that the speedometer works normally.

Q: Is the diagnosis code set?
YES : Go to Step 2.
NO : Diagnose the combination meter (Refer to GROUP 54A – Combination meter P.54A-38).

Step 2. Connector check: B-115 vehicles speed sensor connector

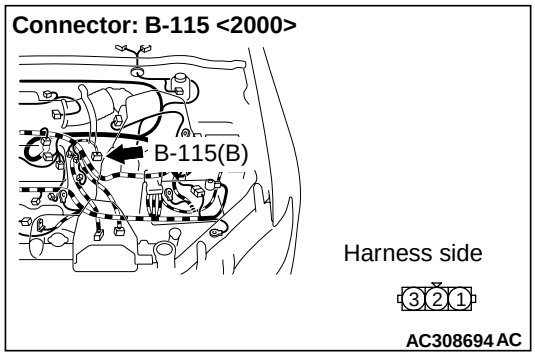

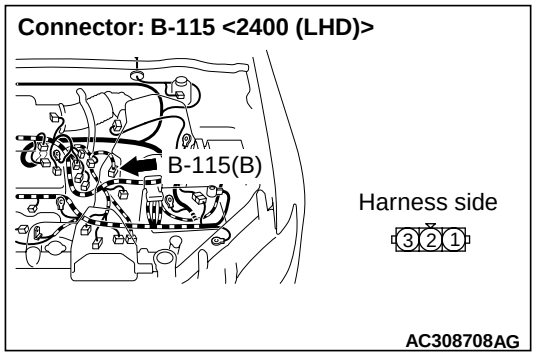

Q: Is the check result normal?
YES : Go to Step 3.
NO : Repair the defective connector.

Step 3. Measure the resistance at the B-115 vehicles speed sensor connector.

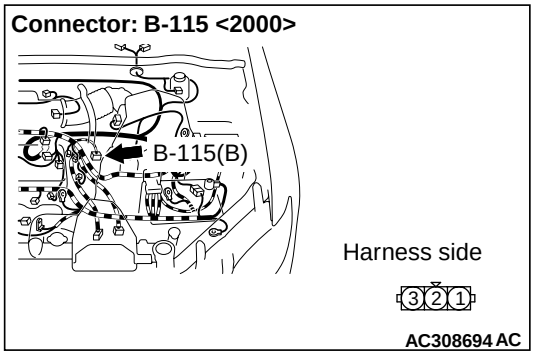

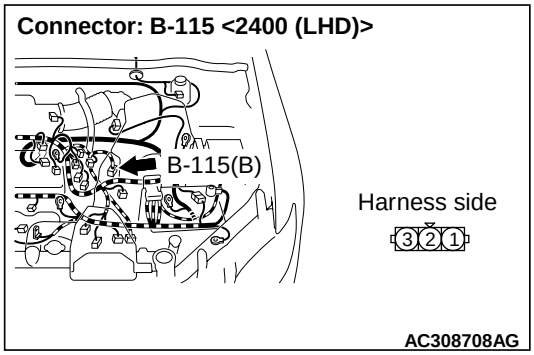

(1) Disconnect the connector, and measure at the wiring harness side.

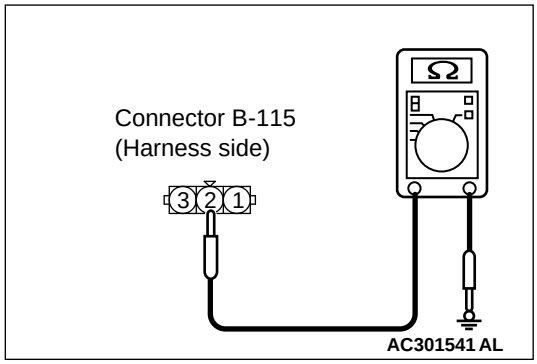

(2) Resistance between B-115 vehicles speed sensor connector terminal No.2 and body earth

OK: 2 Ω or less

Q: Is the check result normal?
YES : Go to Step 5.
NO : Go to Step 4.

Step 4. Check the wiring harness between B-115 vehicles speed sensor connector terminal No.2 and the body earth.

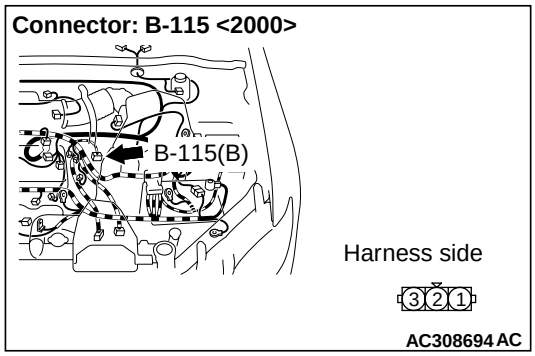

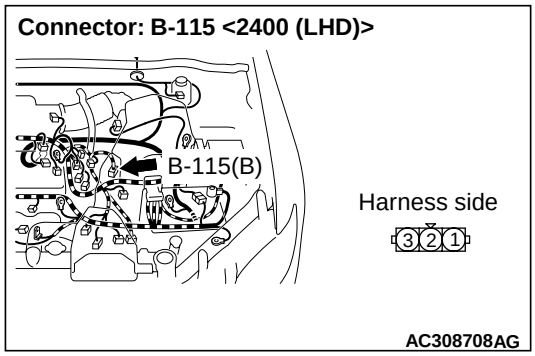

NOTE:

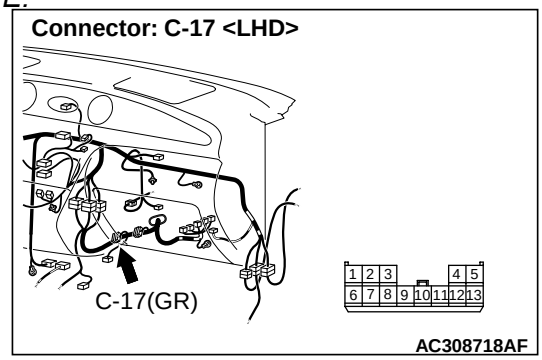

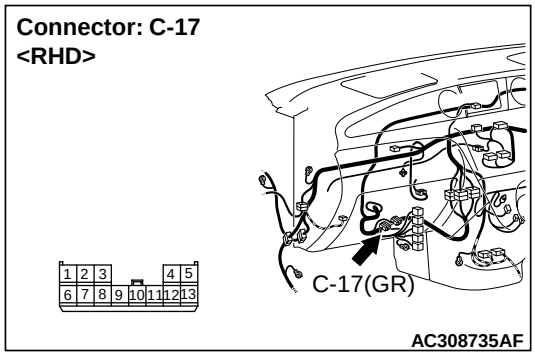

Prior to the wiring harness inspection, check joint connector C-17, and repair if necessary.

- Check the earth wires for open circuit.

Q: Is the check result normal?

YES : The trouble can be an intermittent malfunction (Refer to GROUP 00 – How to Cope with Intermittent Malfunction P.00-6).

NO : Repair the wiring harness.

Step 5. Connector check: C-219 ETACS-ECU connector

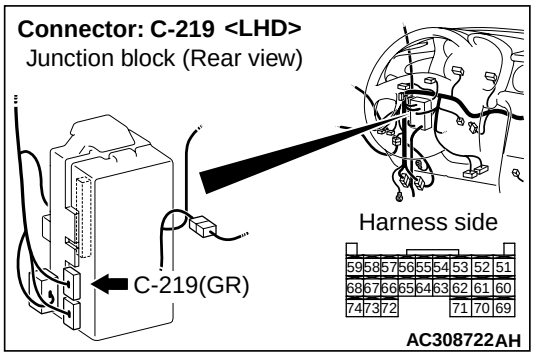

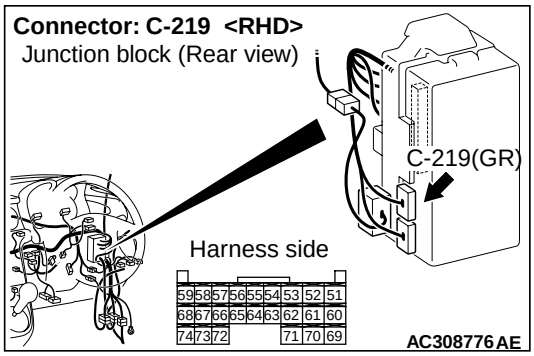

Q: Is the check result normal?

YES : Go to Step 6.

NO : Repair the defective connector.

Step 6. Check the wiring harness between B-115 vehicles speed sensor connector terminal No.3 and C-219 ETACS-ECU connector terminal No.63.

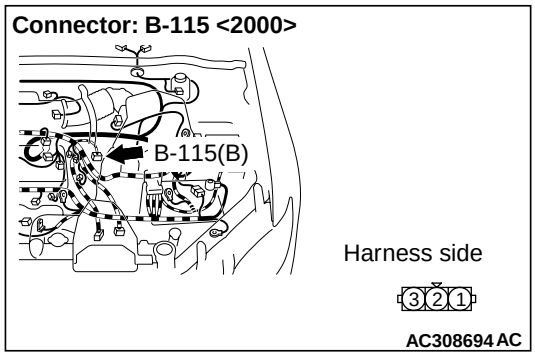

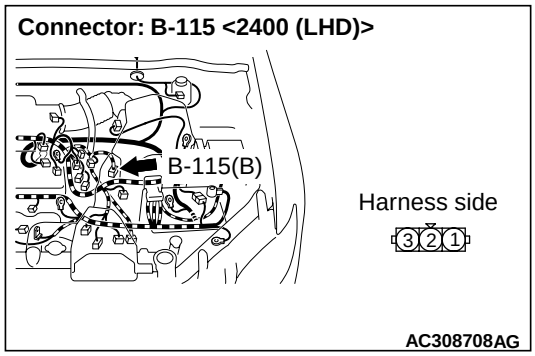

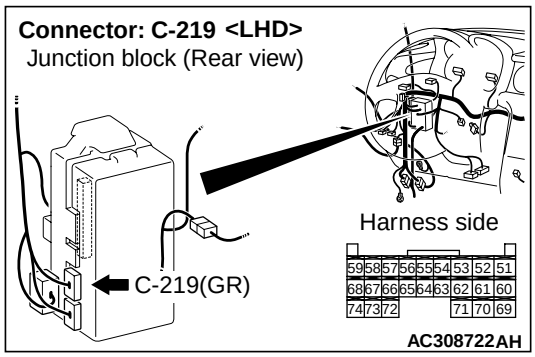

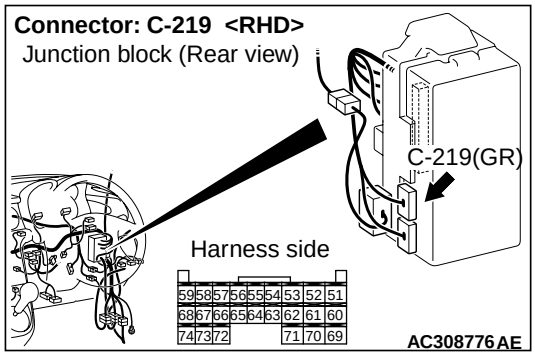

NOTE:

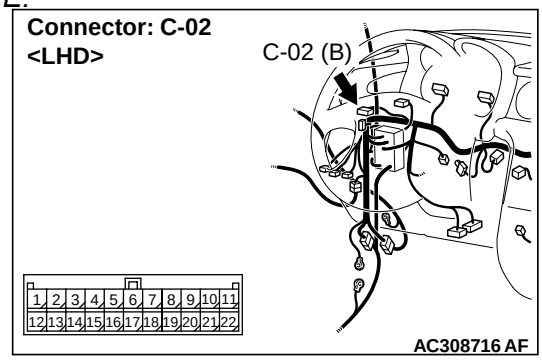

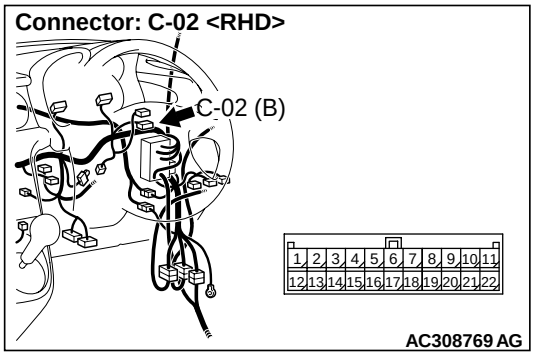

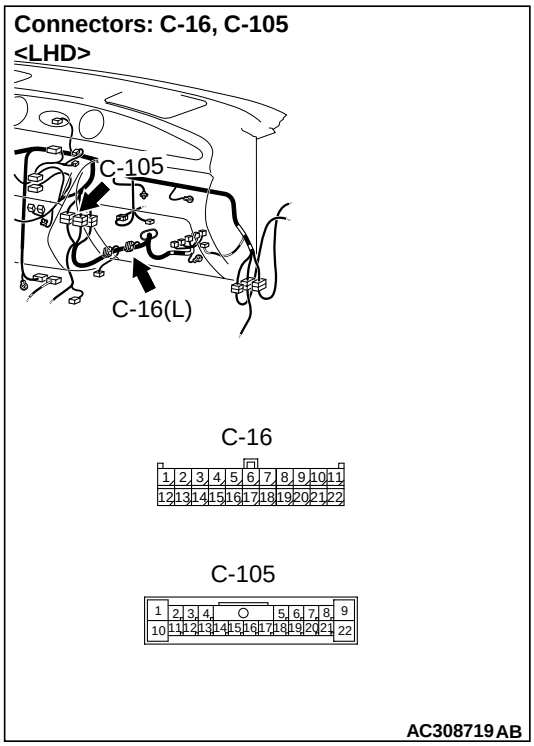

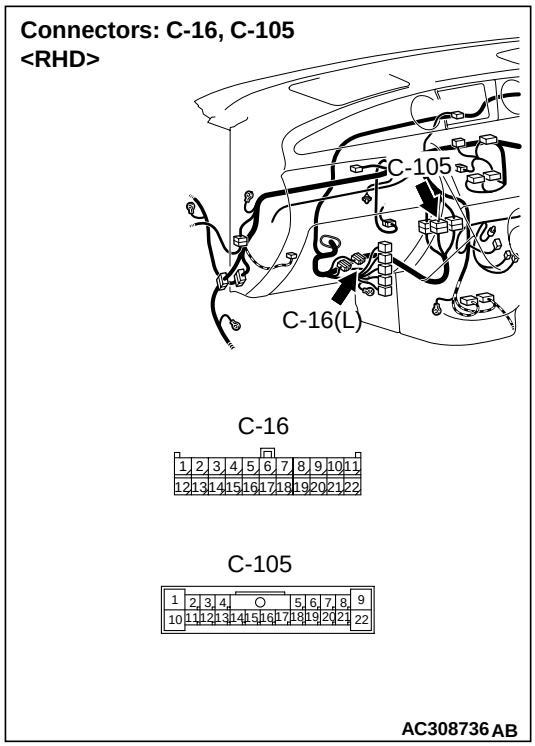

Prior to the wiring harness inspection, check joint connector C-02, C-16 <2000> and intermediate connector C-105, and repair if necessary.

- Check the input line for open circuit.

Q: Is the check result normal?
YES : Go to Step 7.
NO : Repair the wiring harness.

Step 7. Retest the system.
Check that the vehicle speed signal is received normally.

Q: Is the check result normal?
YES : The trouble can be an intermittent malfunction (Refer to GROUP 00 – How to Cope with Intermittent Malfunction P.00-6).
NO : Replace the ETACS-ECU.

INSPECTION PROCEDURE N-13: The vehicle speed signal is not received. <A/T>

⚠ CAUTION

Whenever the ECU is replaced, ensure that the input signal circuit is normal.

Vehicle Speed Sensor Input Circuit <A/T>

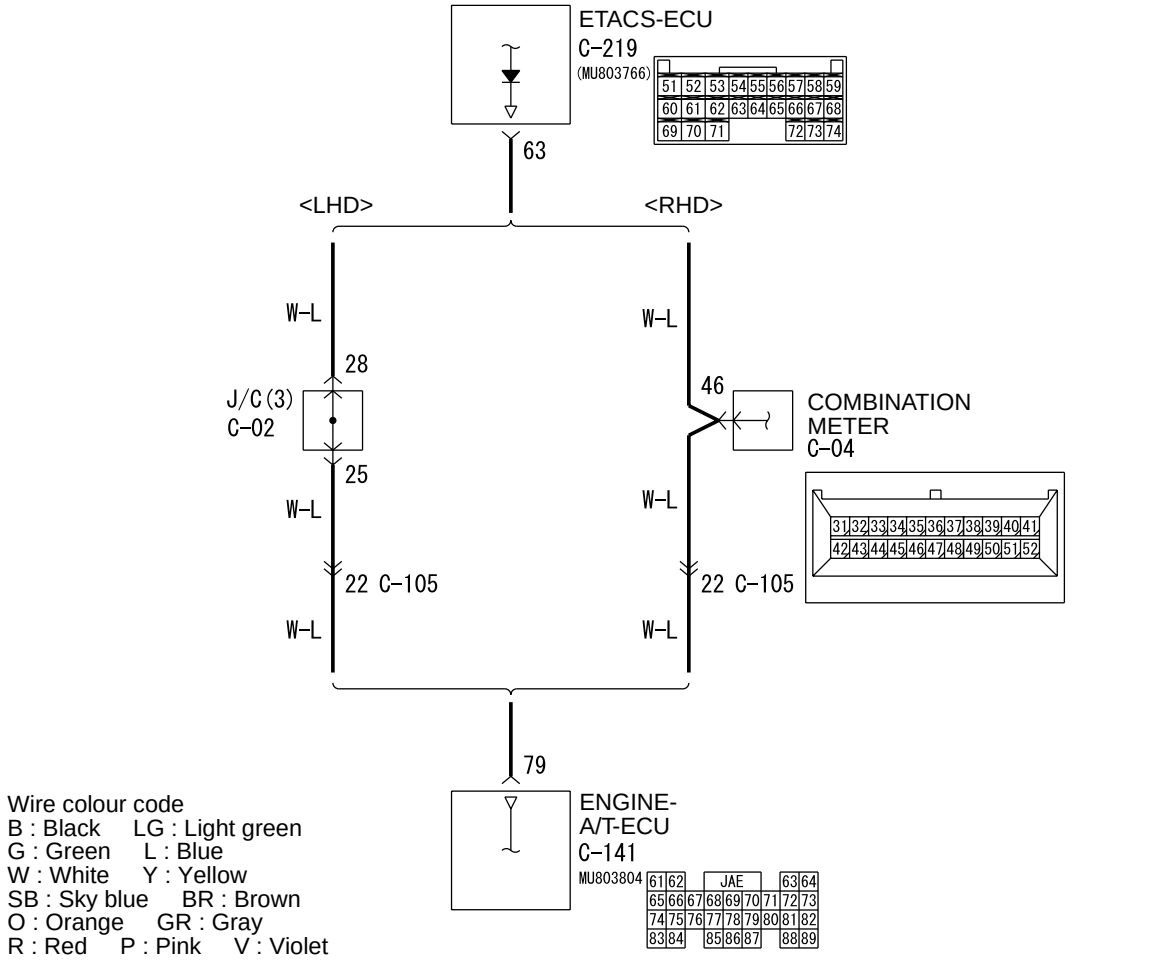

COMMENTS ON TROUBLE SYMPTOM

Vehicle speed signal is used to operate the windshield wiper (vehicle speed-dependent wiper function). If this signal is abnormal, the windshield wipers do not work normally.

POSSIBLE CAUSES

- Malfunction of the engine-A/T-ECU
- Malfunction of the ETACS-ECU
- Damaged harness wires and connectors

DIAGNOSTIC PROCEDURE

Step 1. Check if the A/T related diagnosis code is set.

Q: Is the diagnosis code set?

YES : Diagnose the automatic transmission control system. (Refer to GROUP 23 – Troubleshooting P.23A-18)

NO : Go to Step 2.

Step 2. Connector check: C-141 engine-A/T-ECU connector and C-219 ETACS-ECU connector

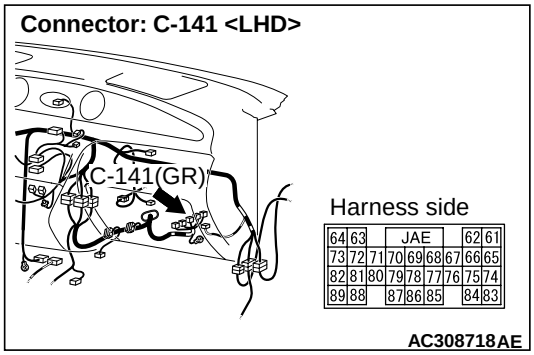

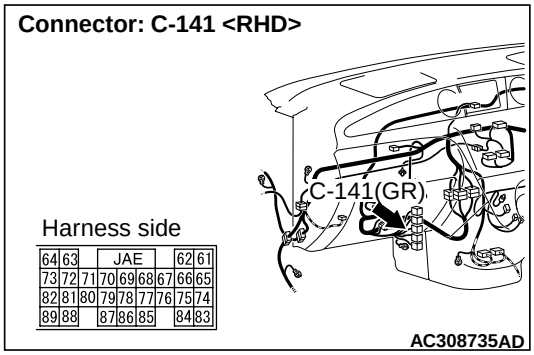

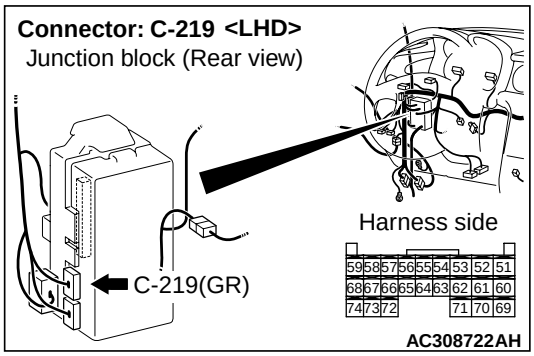

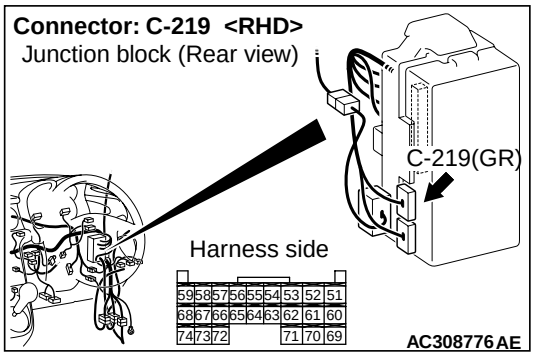

Q: Is the check result normal?

YES : Go to Step 3.

NO : Repair the defective connector.

Step 3. Check the wiring harness between C-141 engine-A/T-ECU connector terminal No.79 and C-219 ETACS-ECU connector terminal No.63.

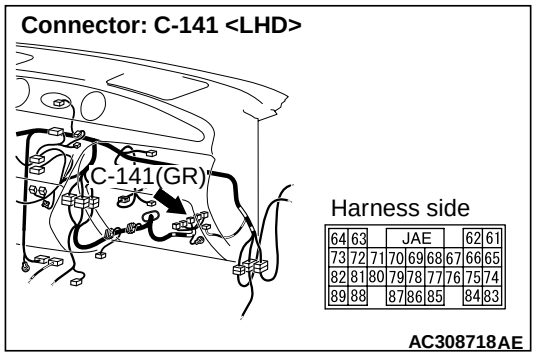

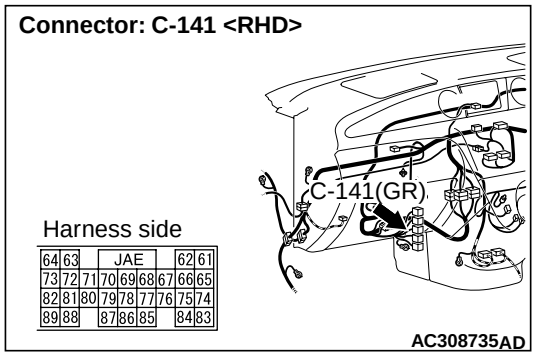

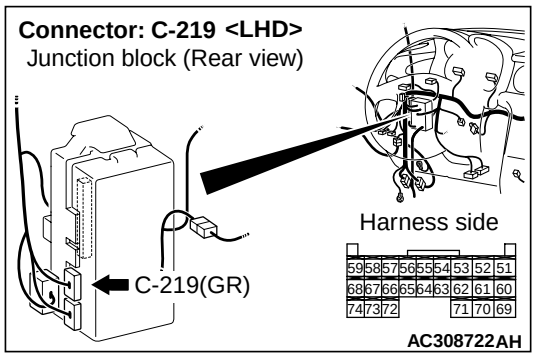

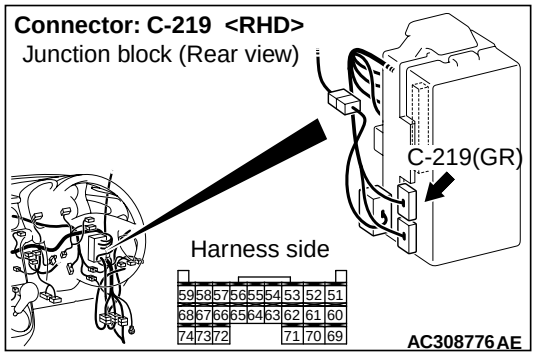

NOTE:

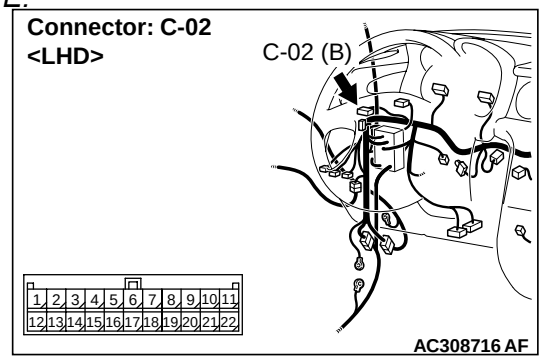

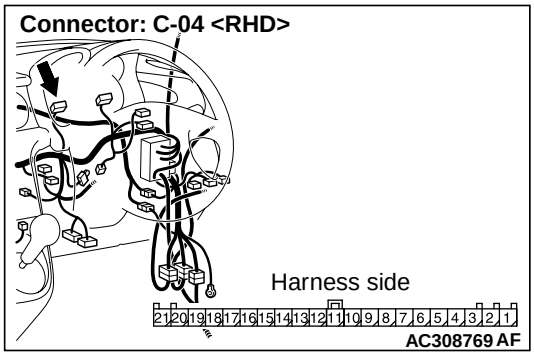

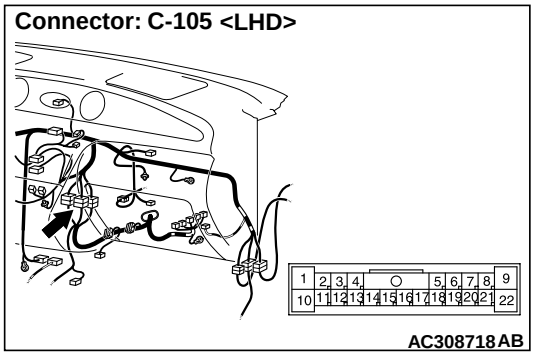

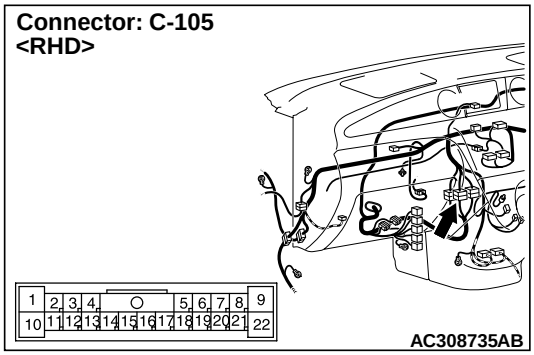

Prior to the wiring harness inspection, check joint connector C-02 <L.H. driver vehicles>, combination meter connector C-04 <R.H. drive vehicles> and intermediate connector C-105, and repair if necessary.

- Check the input line for open circuit.

Q: Is the check result normal?
YES : Go to Step 4.
NO : Repair the wiring harness.

Step 4. Check the speedometer.
Check that the speedometer works normally.

Q: Is the check result normal?
YES : Go to Step 5.
NO : Replace the engine-A/T-ECU.

Step 5. Retest the system.
Check that the vehicle speed signal is received normally.

Q: Is the check result normal?
YES : The trouble can be an intermittent malfunction (Refer to GROUP 00 – How to Cope with Intermittent Malfunction P.00-6).
NO : Replace the ETACS-ECU.

INSPECTION PROCEDURE N-14: Each switch signal of the keyless entry transmitter is not received.

⚠ CAUTION
Whenever the ECU is replaced, ensure that the input signal circuit is normal.

Transmitter Input Circuit

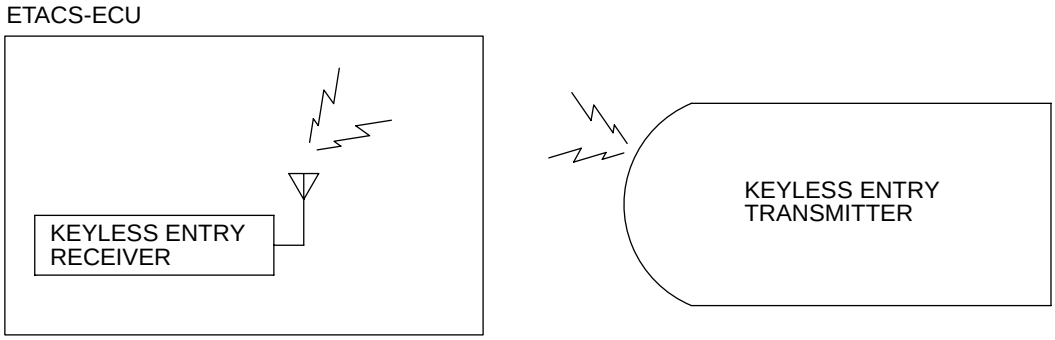

W3Z10E39AA

COMMENTS ON TROUBLE SYMPTOM
Input signal from the keyless entry transmitter is used to operate the keyless entry system. If the signal is abnormal, the keyless entry system will not work normally.

POSSIBLE CAUSES
- Malfunction of the keyless entry transmitter
- Defective battery of the keyless entry transmitter
- Malfunction of the ETACS-ECU

DIAGNOSTIC PROCEDURE

Step 1. Pulse check
Check whether the ETACS-ECU receives signal from a transmitter or not. For this check, you should use the 2-button-type transmitter (integrated with a key), which cover screw is silver and has already been registered.

NOTE: For how to register the keyless entry transmitter encrypted code, refer to GROUP 42 – On-vehicle Service P.42-54.

System switch	Check condition
Keyless entry transmitter "LOCK/UNLOCK" switch	When the switch is turned from off to on

OK: The MUT-II/III sounds or the voltmeter needle fluctuates.

Q: Is the check result normal?
YES : Go to Step 2.
NO : Go to Step 4.

Step 2. Check the transmitter battery.
Refer to GROUP 42 – Keyless entry system P.42-50.

Q: Is the check result normal?
YES : Go to Step 3.
NO : Replace the keyless entry transmitter battery.

Step 3. Register the encrypted code, and then retest the system.
(1) Register the keyless entry transmitter again.
(2) Check that each signal is received from the keyless entry transmitter.

Q: Is the check result normal?
YES : The trouble can be an intermittent malfunction (Refer to GROUP 00 – How to Cope with Intermittent Malfunction P.00-6).
NO : Replace the keyless entry transmitter.

Step 4. Retest the system.
Check that each signal is received from the keyless entry transmitter.

Q: Is the check result normal?
YES : The trouble can be an intermittent malfunction (Refer to GROUP 00 – How to Cope with Intermittent Malfunction P.00-6).
NO : Replace the ETACS-ECU.

INSPECTION PROCEDURE N-15: The front fog lamp switch signal is not received.

⚠ CAUTION
Whenever the ECU is replaced, ensure that the input signal circuit is normal.

Front Fog Lamp Switch Input Circuit

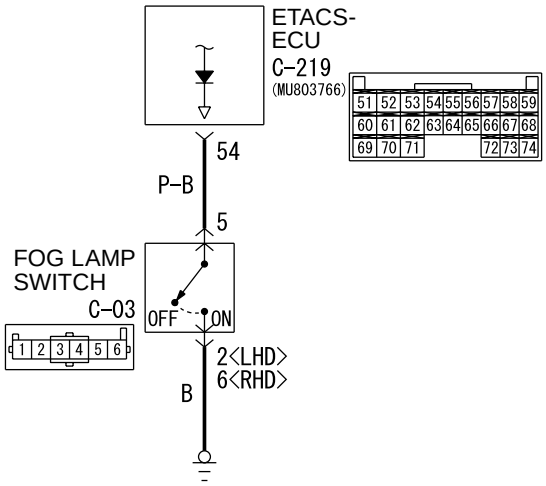

Wire colour code
B : Black LG : Light green G : Green L : Blue W : White Y : Yellow SB : Sky blue
BR : Brown O : Orange GR : Gray R : Red P : Pink V : Violet

W4Z54E41AA

COMMENTS ON TROUBLE SYMPTOM
Input signal from the front fog lamp switch is used to operate the front fog lamps. If the signal is abnormal, the front fog lamps will not illuminate and extinguish normally.

POSSIBLE CAUSES
- Malfunction of the fog lamp switch
- Malfunction of the ETACS-ECU
- Damaged harness wires and connectors

DIAGNOSTIC PROCEDURE

Step 1. Connector check: C-03 fog lamp switch connector

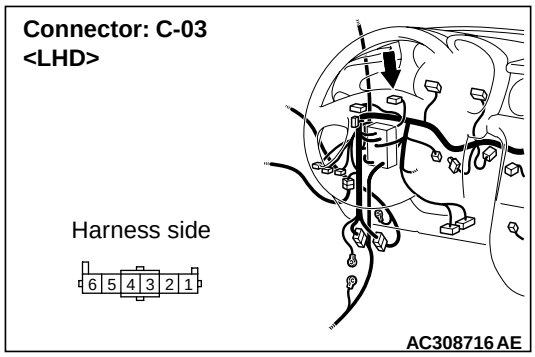

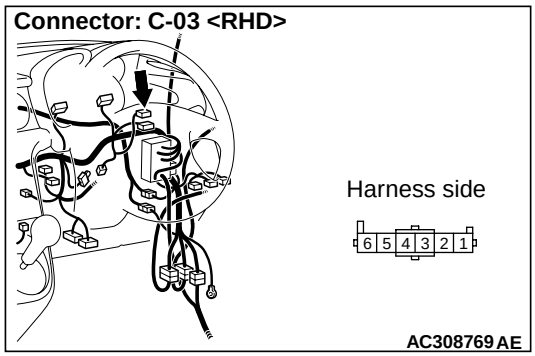

Q: Is the check result normal?
YES : Go to Step 2.
NO : Repair the defective connector.

Step 2. Check the front fog lamp switch.

Refer to GROUP 54A – Front fog lamp P.54A-82.

Q: Is the check result normal?
YES : Go to Step 3.
NO : Replace the fog lamp switch.

Step 3. Measure the resistance at the C-03 fog lamp switch connector.

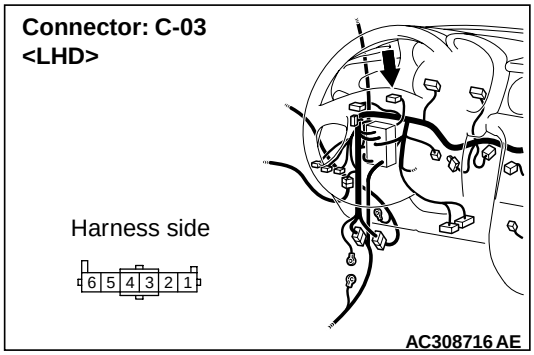

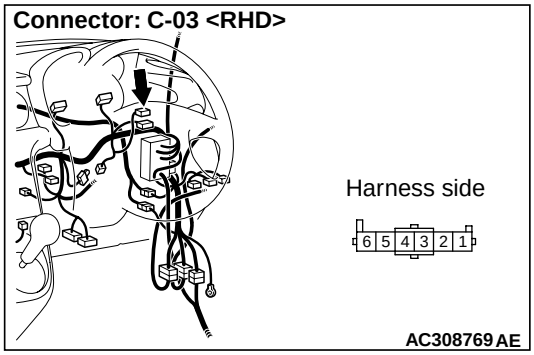

(1) Remove the fog lamp switch, and measure at the wiring harness side.

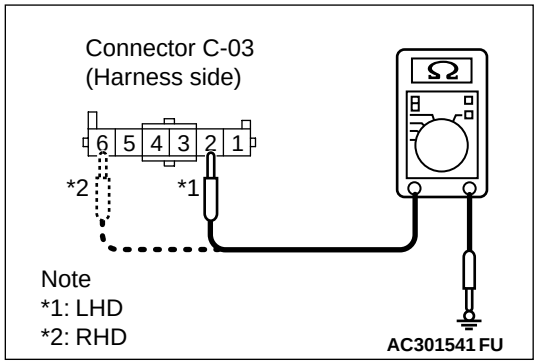

(2) Resistance between C-03 fog lamp switch connector terminal No.2 <L.H. drive vehicles> or terminal No.6 <R.H. drive vehicles> and body earth

OK: 2Ω or less

Q: Is the check result normal?
YES : Go to Step 5.
NO : Go to Step 4.

Step 4. Check the wiring harness from C-03 fog lamp switch connector terminal No.2 <L.H. drive vehicles> or terminal No.6 <R.H. drive vehicles> to body earth.

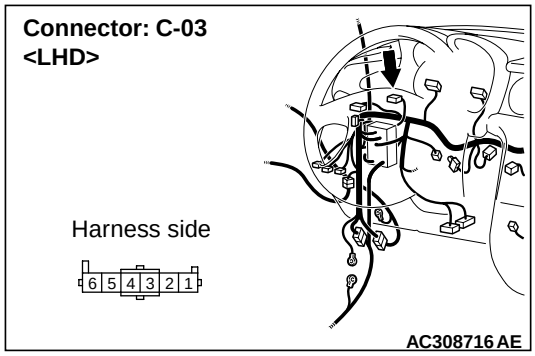

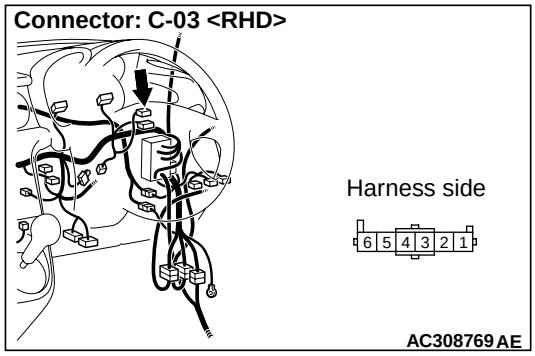

- Check the earth wires for open circuit.

Q: Is the check result normal?

YES : The trouble can be an intermittent malfunction (Refer to GROUP 00 – How to Cope with Intermittent Malfunction P.00-6).

NO : Repair the wiring harness.

Step 5. Connector check: C-219 ETACS-ECU connector

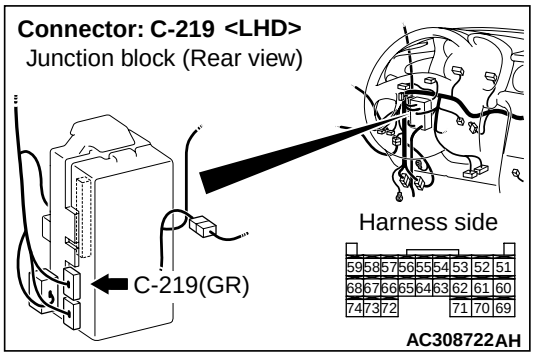

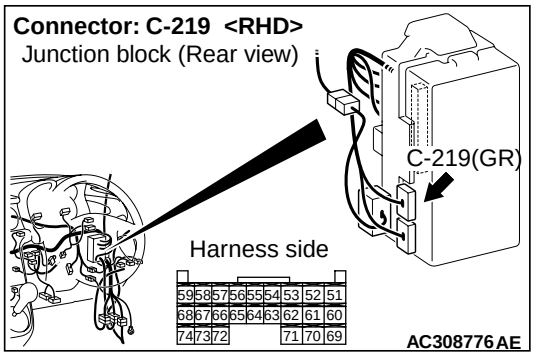

Q: Is the check result normal?

YES : Go to Step 6.

NO : Repair the defective connector.

Step 6. Check the wiring harness from C-219 ETACS-ECU connector No.54 to C-03 fog lamp switch connector terminal No.5.

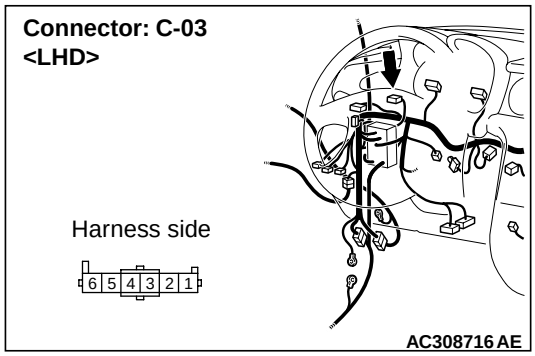

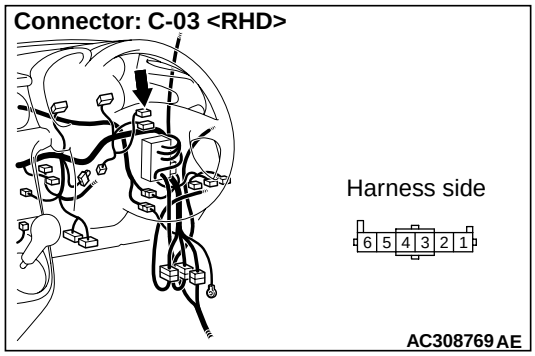

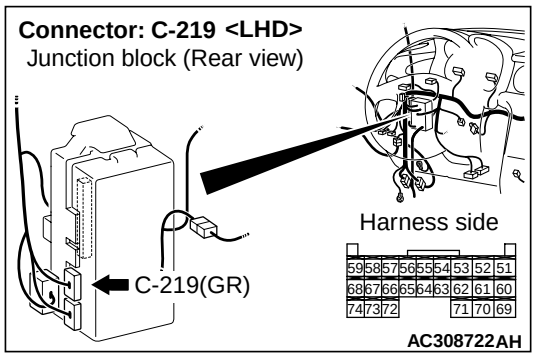

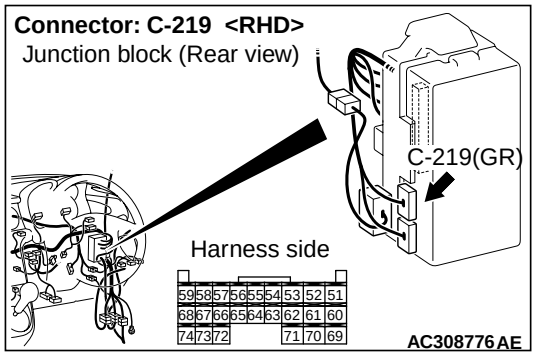

- Check the input line for open circuit.

Q: Is the check result normal?

YES : Go to Step 7.
NO : Repair the wiring harness.

Step 7. Retest the system.
Check that the front fog lamp switch signal is received normally.

Q: Is the check result normal?
YES : The trouble can be an intermittent malfunction (Refer to GROUP 00 – How to Cope with Intermittent Malfunction P.00-6).
NO : Replace the ETACS-ECU.

INSPECTION PROCEDURE N-16: The rear fog lamp switch signal is not received.

⚠ CAUTION

Whenever the ECU is replaced, ensure that the input signal circuit is normal.

Rear Fog Lamp Switch Input Circuit

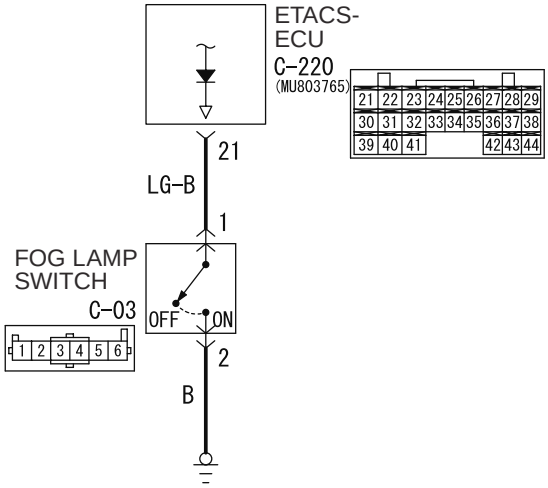

Wire colour code
B : Black LG : Light green G : Green L : Blue W : White Y : Yellow SB : Sky blue
BR : Brown O : Orange GR : Gray R : Red P : Pink V : Violet

W3Z10E33AA

COMMENTS ON TROUBLE SYMPTOM

Input signal from the rear fog lamp switch is used to operate the rear fog lamps. If the signal is abnormal, the rear fog lamps will not illuminate and extinguish normally.

POSSIBLE CAUSES

- Malfunction of the fog lamp switch
- Malfunction of the ETACS-ECU
- Damaged harness wires and connectors

DIAGNOSTIC PROCEDURE

Step 1. Connector check: C-03 fog lamp switch connector

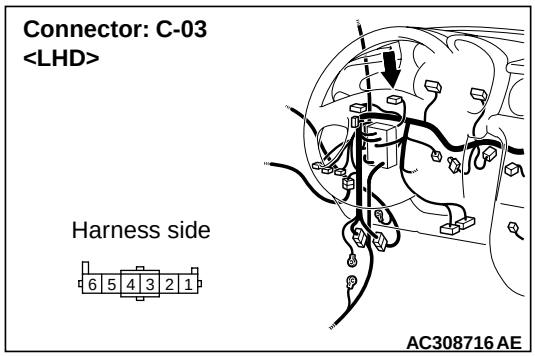

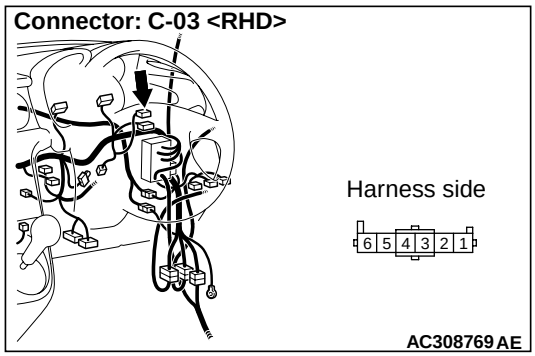

Q: Is the check result normal?
YES : Go to Step 2.
NO : Repair the defective connector.

Step 2. Check the rear fog lamp switch.

Refer to GROUP 54A – Rear fog lamp P.54A-85.

Q: Is the check result normal?
YES : Go to Step 3.
NO : Replace the fog lamp switch.

Step 3. Measure the resistance at the C-03 fog lamp switch connector.

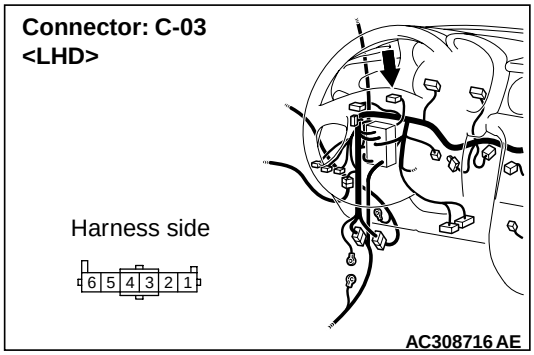

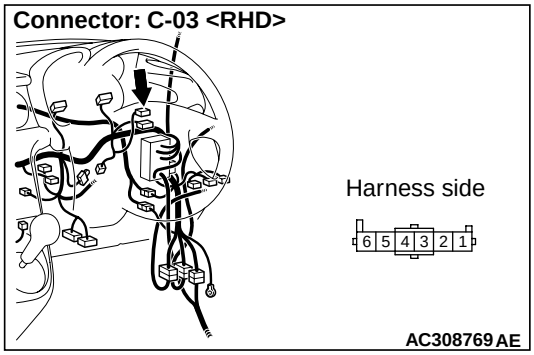

(1) Remove the fog lamp switch, and measure at the wiring harness side.

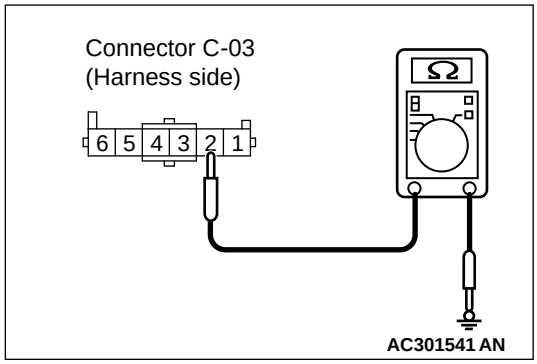

(2) Continuity between C-03 fog lamp switch connector terminal No.2 and body earth

OK: 2Ω or less

Q: Is the check result normal?
YES : Go to Step 5.
NO : Go to Step 4.

Step 4. Check the wiring harness between C-03 fog lamp switch connector terminal No.2 and body earth.

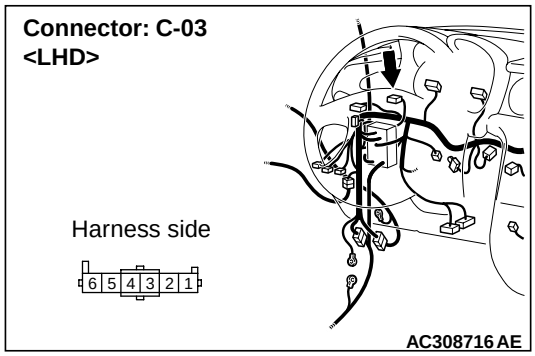

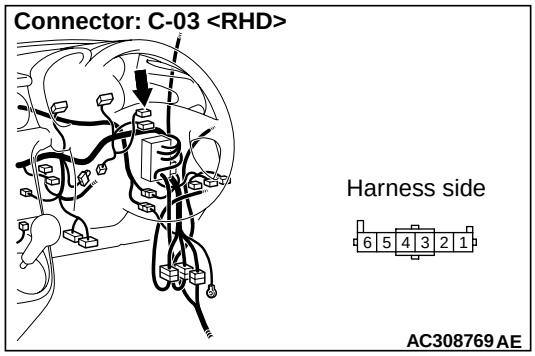

- Check the earth wires for open circuit.

Q: Is the check result normal?
YES : The trouble can be an intermittent malfunction (Refer to GROUP 00 – How to Cope with Intermittent Malfunction P.00-6).
NO : Repair the wiring harness.

Step 5. Connector check: C-220 ETACS-ECU connector

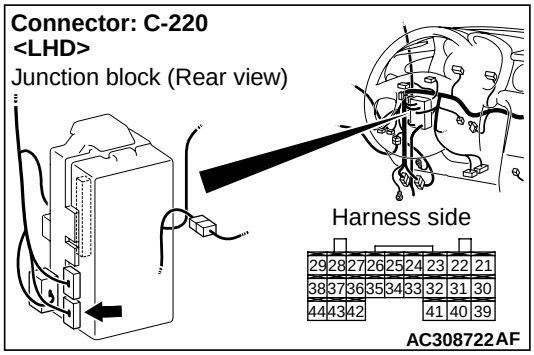

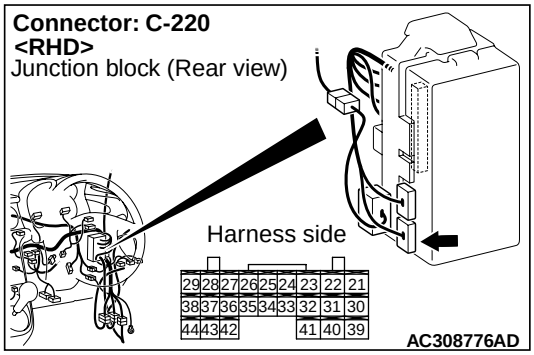

Q: Is the check result normal?
YES : Go to Step 6.
NO : Repair the defective connector.

Step 6. Check the wiring harness between C-220 ETACS-ECU connector terminal No.21 and C-03 fog lamp switch connector terminal No.1.

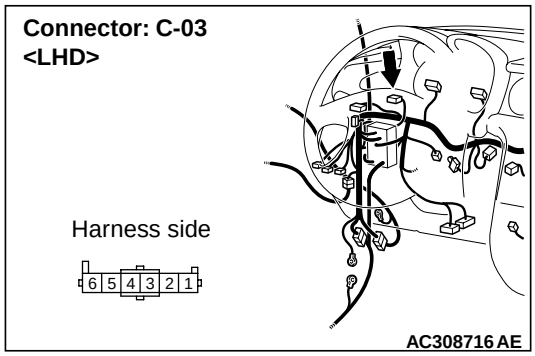

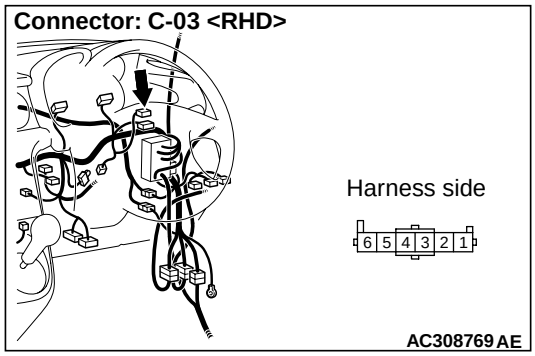

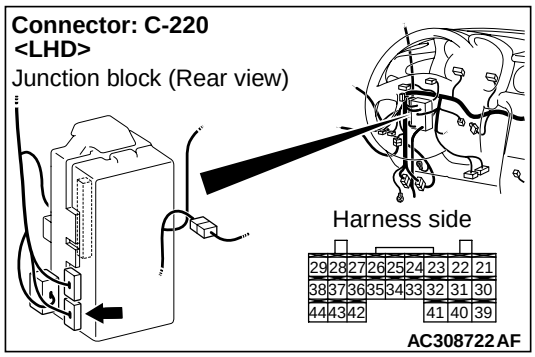

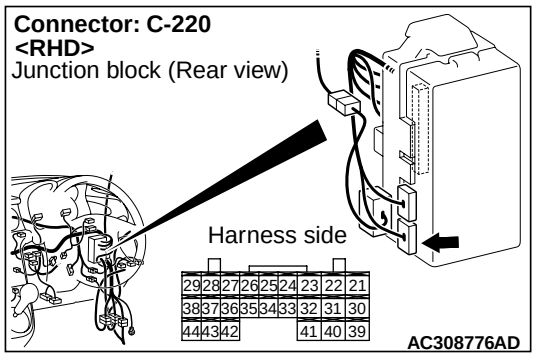

- Check the input line for open circuit.

Q: Is the check result normal?

YES : Go to Step 7.
NO : Repair the wiring harness.

Step 7. Retest the system.
Check that the rear fog lamp switch signal is received normally.

Q: Is the check result normal?
YES : The trouble can be an intermittent malfunction (Refer to GROUP 00 – How to Cope with Intermittent Malfunction P.00-6).
NO : Replace the ETACS-ECU.

INSPECTION PROCEDURE N-17: The interior lamp loaded signal is not detected.

⚠ CAUTION

Whenever the ECU is replaced, ensure that the input signal circuit is normal.

Interior Lamp Automatic Shut-off Function Circuit <LHD>

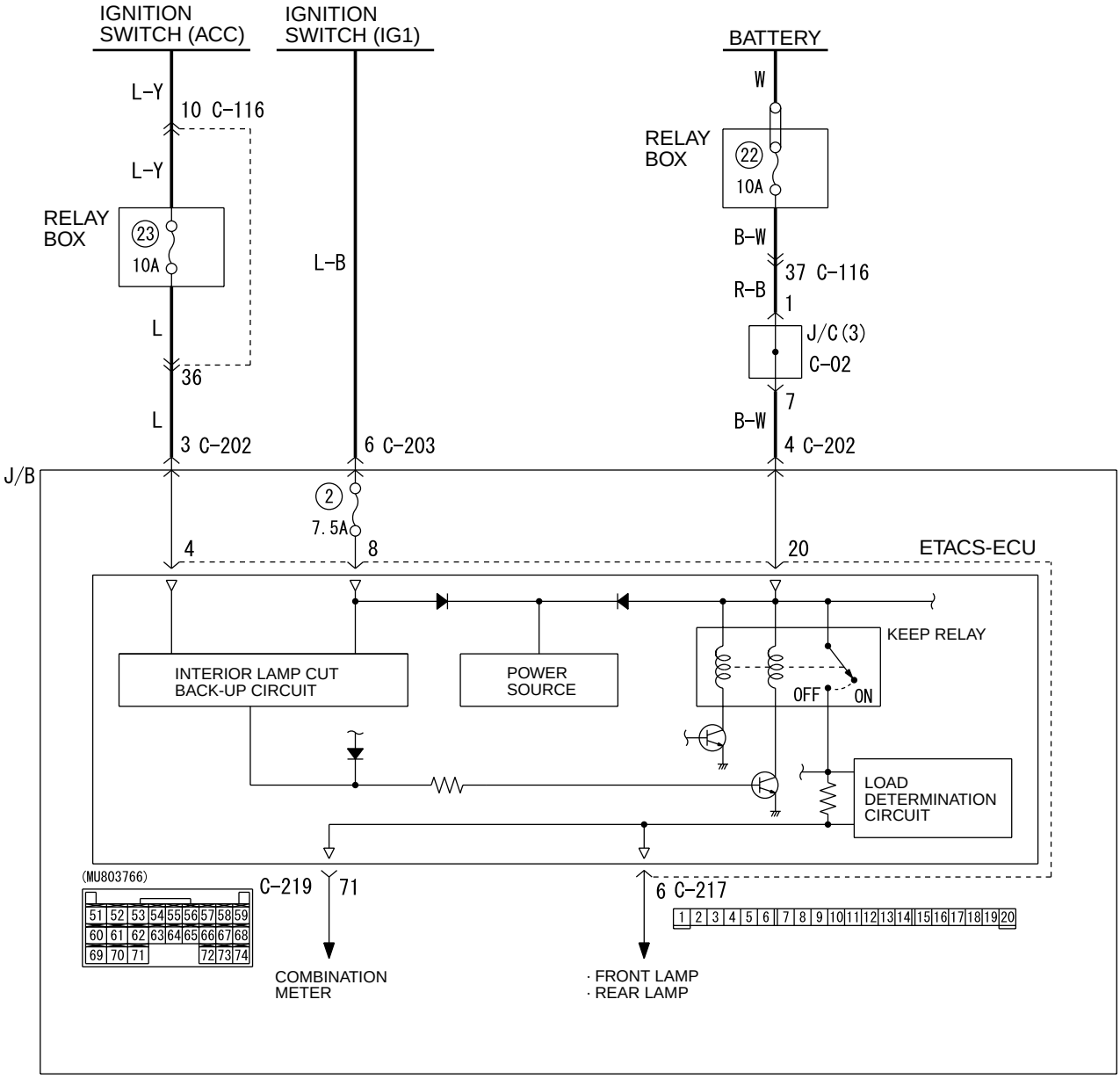

Wire colour code
B : Black LG : Light green G : Green L : Blue W : White Y : Yellow SB : Sky blue
BR : Brown O : Orange GR : Gray R : Red P : Pink V : Violet

W4Z54E43AA

Interior Lamp Automatic Shut-off Function Circuit <RHD>

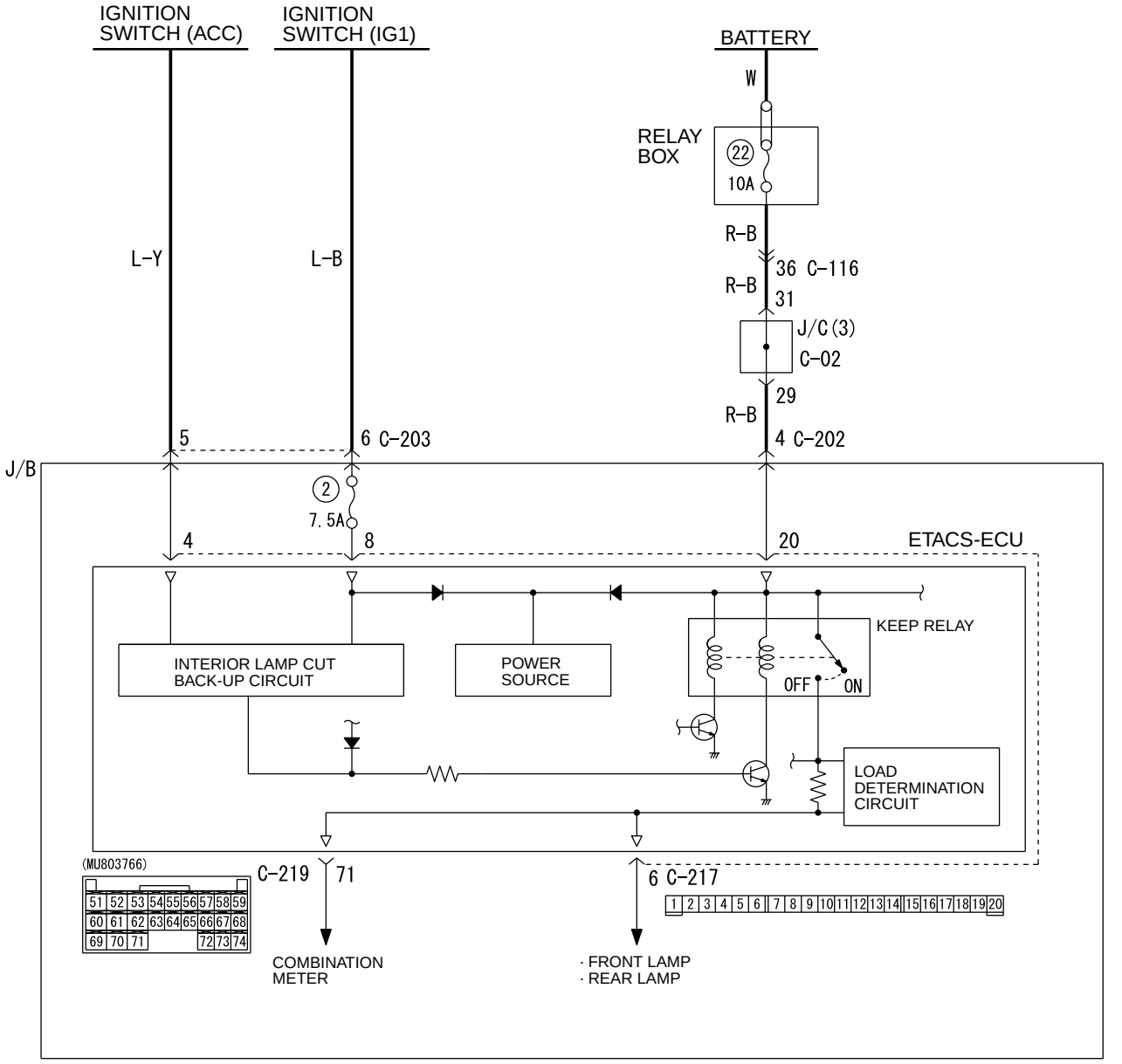

Wire colour code
B : Black LG : Light green G : Green L : Blue W : White Y : Yellow SB : Sky blue
BR : Brown O : Orange GR : Gray R : Red P : Pink V : Violet

W4Z54E57AA

COMMENTS ON TROUBLE SYMPTOM

The interior lamp automatic-shutdown function operates in accordance with the interior lamp loaded signal. If this signal is abnormal, the functions below will not work normally.

- Ignition key cylinder illumination lamp
- Room lamps

POSSIBLE CAUSES

- Malfunction of the ETACS-ECU
- Damaged wiring harness or connector(s)

DIAGNOSTIC PROCEDURE

Step 1. Check the power supply circuit.

When the ignition switch is turned to the LOCK (OFF) position, check if the hazard warning lamps illuminate.

Q: Is the check result normal?
YES : Go to Step 2.
NO : Refer to inspection procedure A-2 "Check the ETACS-ECU battery power supply circuit P.54B-52."

Step 2. Connector check: C-217 ETACS-ECU connector

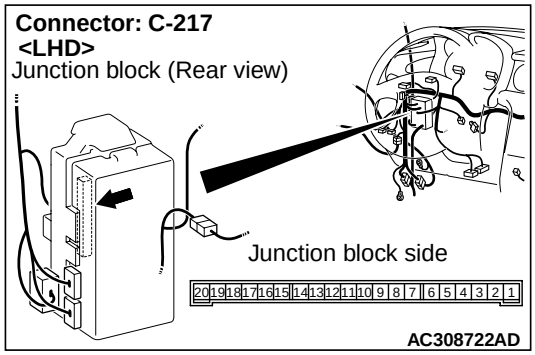

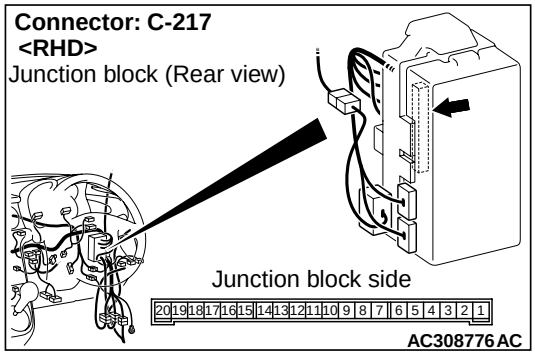

Q: Is the check result normal?
YES : Go to Step 3.
NO : Repair the defective connector.

Step 3. Measure the voltage at the C-217 ETACS-ECU connector.

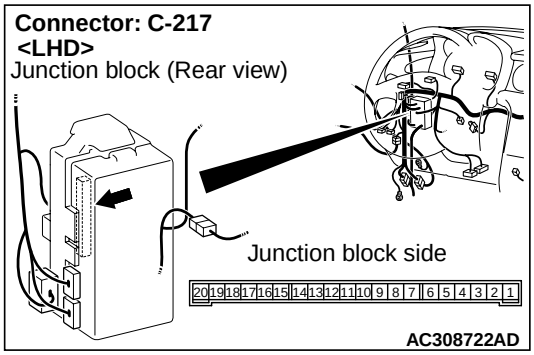

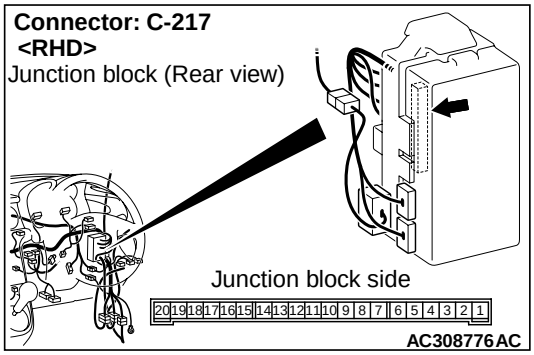

(1) Remove the ETACS-ECU, and measure at the junction block side.
(2) Turn the ignition switch to the ON position.

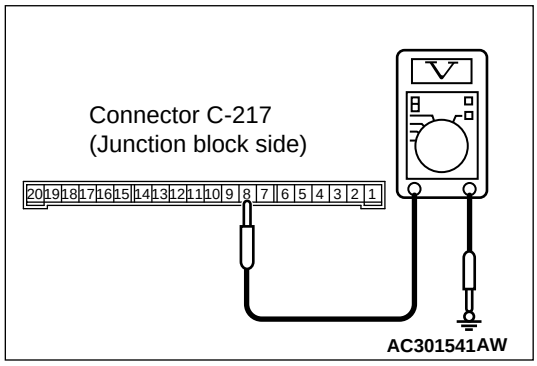

(3) Voltage between C-217 ETACS-ECU connector terminal No.8 and body earth

OK: System voltage

Q: Is the check result normal?
YES : Go to Step 5.
NO : Go to Step 4.

Step 4. Check the wiring harness between C-217 ETACS-ECU connector terminal No.8 and the ignition switch (IG1).

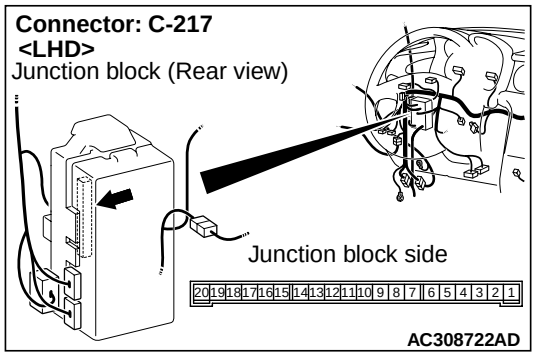

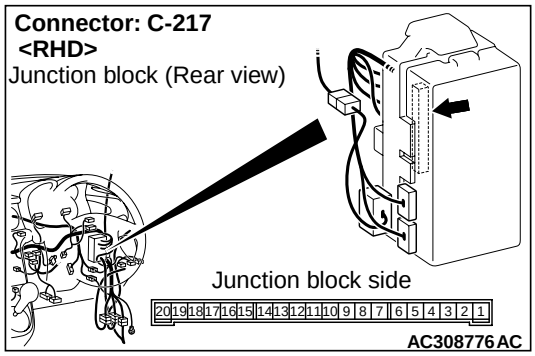

NOTE:

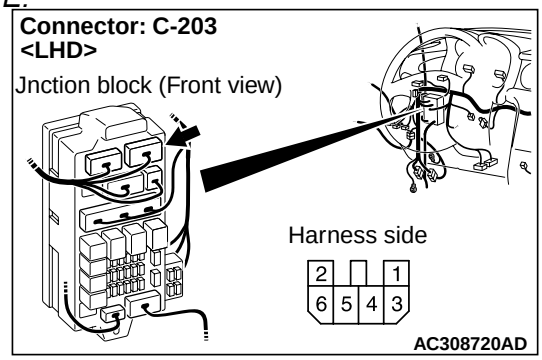

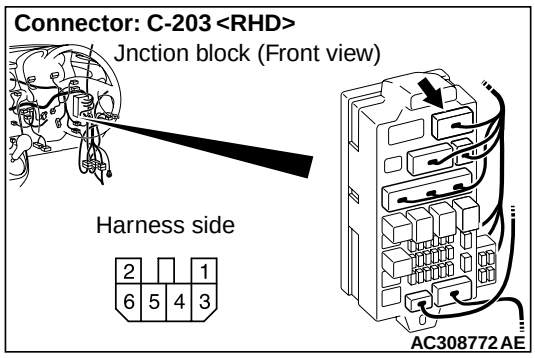

Prior to the wiring harness inspection, check junction block connector C-203, and repair if necessary.

- Check the power supply line to the ignition switch (IG1) for open circuit.

Q: Is the check result normal?

YES : The trouble can be an intermittent malfunction (Refer to GROUP 00 – How to Cope with Intermittent Malfunction P.00-6).

NO : Repair the wiring harness.

Step 5. Measure the voltage at the C-217 ETACS-ECU connector.

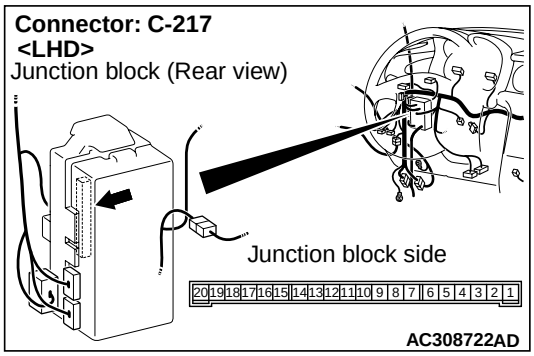

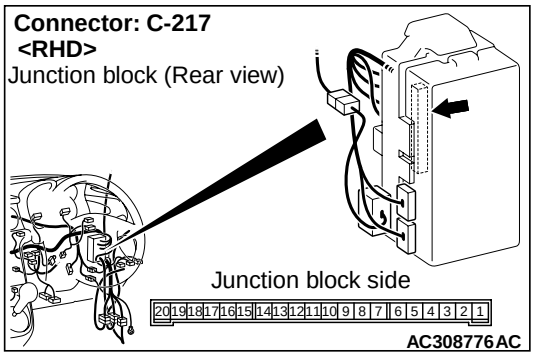

(1) Remove the ETACS-ECU, and measure at the junction block side.

(2) Turn the ignition switch to the ACC position.

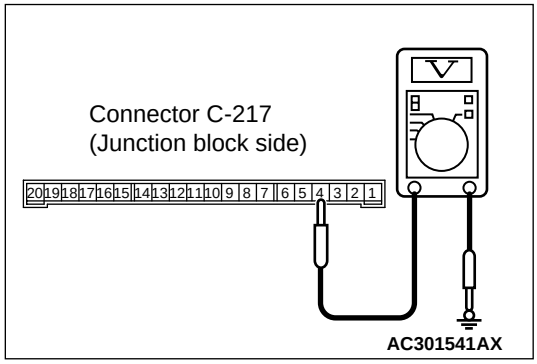

(3) Voltage between terminal 4 and body earth

OK: System voltage

Q: Is the check result normal?

YES : Go to Step 7.

NO : Go to Step 6.

Step 6. Check the wiring harness between C-217 ETACS-ECU connector terminal No.4 and the ignition switch (ACC).

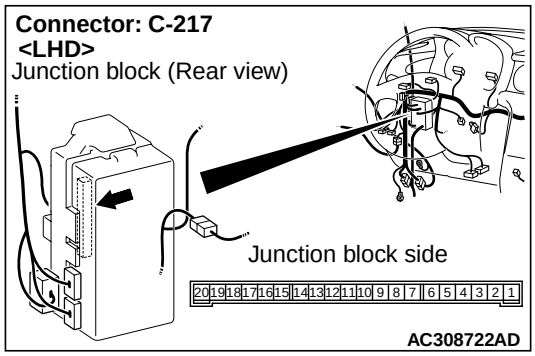

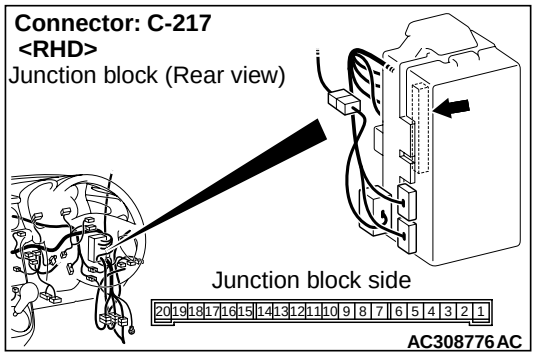

NOTE:

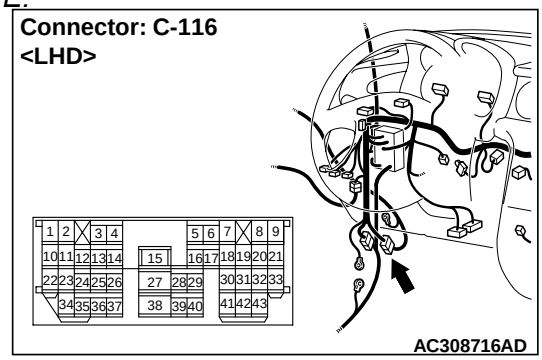

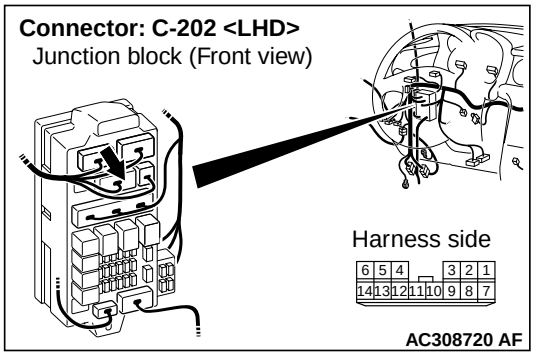

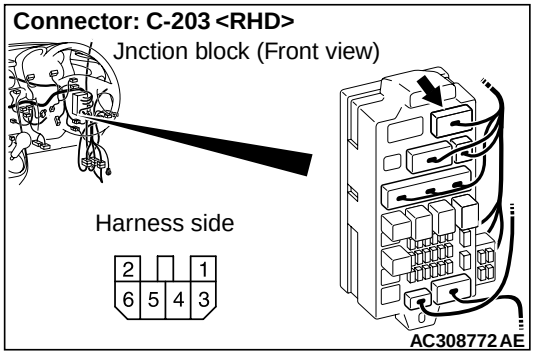

Prior to the wiring harness inspection, check junction block connector C-202 <L.H. drive vehicles>, C-203 <R.H. drive vehicles> or intermediate connector C-116 <L.H. drive vehicles>, and repair if necessary.

- Check the power supply line to the ignition switch (ACC) for open circuit.

Q: Is the check result normal?

YES : The trouble can be an intermittent malfunction (Refer to GROUP 00 – How to Cope with Intermittent Malfunction P.00-6).

NO : Repair the wiring harness.

Step 7. Retest the system.
Check that the interior lamp loaded signal is received normally.

Q: Is the check result normal?

YES : The trouble can be an intermittent malfunction (Refer to GROUP 00 – How to Cope with Intermittent Malfunction P.00-6).
NO : Replace the ETACS-ECU.

INSPECTION PROCEDURE N-18: The front passenger's door lock key cylinder switch signal is not detected. <L.H. drive vehicles>

⚠ CAUTION
Whenever the ECU is replaced, ensure that the input signal circuit is normal.

Door Lock Key Cylinder Switch Input Circuit <LHD>

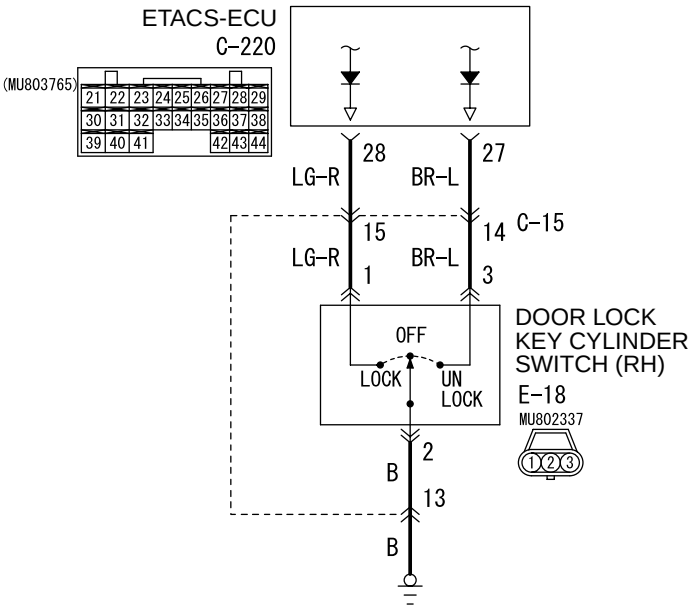

Wire colour code
B : Black LG : Light green G : Green L : Blue W : White Y : Yellow SB : Sky blue
BR : Brown O : Orange GR : Gray R : Red P : Pink V : Violet

W3Z10E41AB

COMMENTS ON TROUBLE SYMPTOM
Input signal from the front passenger's door lock key cylinder switch is used to operate the central door locking function. If the signal is abnormal, the central door locking function will not work normally.

POSSIBLE CAUSES
- Malfunction of the front passenger's door lock key cylinder switch
- Malfunction of the ETACS-ECU
- Damaged harness wires and connectors

DIAGNOSTIC PROCEDURE

Step 1. Connector check: E-18 door lock key cylinder switch (RH) connector

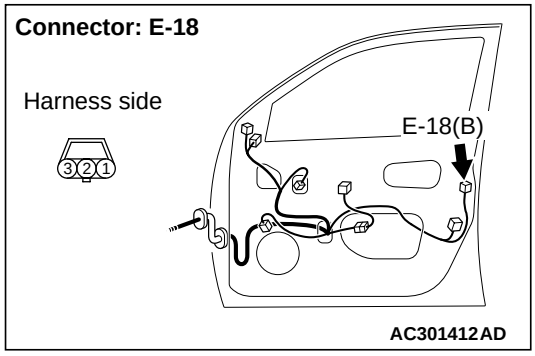

Q: Is the check result normal?
YES : Go to Step 2.
NO : Repair the defective connector.

Step 2. Check the door lock key cylinder switch (RH).

Refer to GROUP 42 – Door P.42-35.

Q: Is the check result normal?
YES : Go to Step 3.
NO : Replace the door lock key cylinder switch (RH).

Step 3. Measure the resistance at the E-18 door lock key cylinder switch (RH) connector.

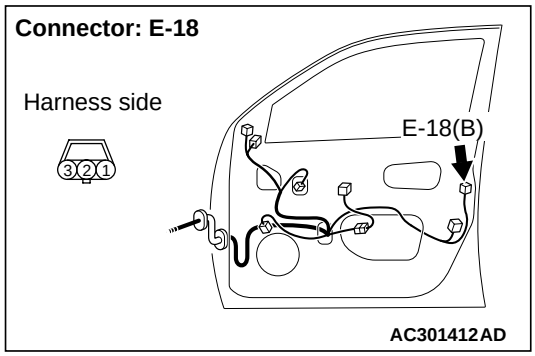

(1) Disconnect the connector, and measure at the wiring harness side.

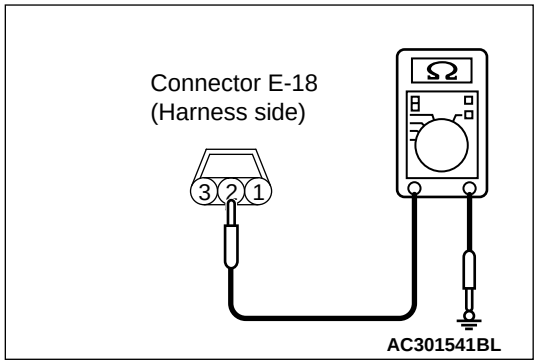

(2) Resistance between E-18 door lock key cylinder switch (RH) connector terminal No. 2 and body earth

OK: 2 Ω or less

Q: Is the check result normal?
YES : Go to Step 5.
NO : Go to Step 4.

Step 4. Check the wiring harness between E-18 door lock key cylinder switch (RH) connector terminal No. 2 and body earth.

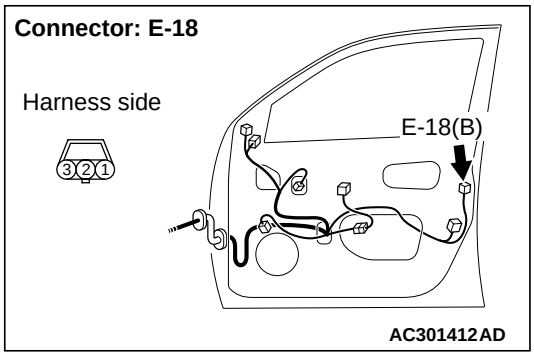

NOTE:

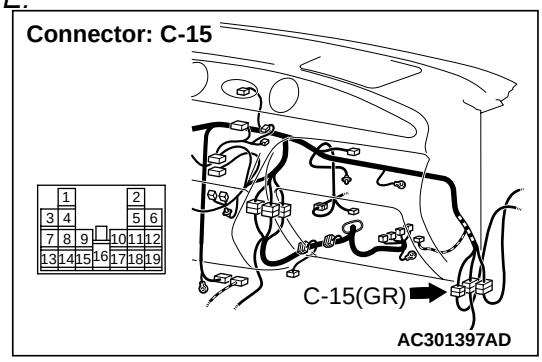

Prior to the wiring harness inspection, check intermediate connector C-15, and repair if necessary.

- Check the earth wires for open circuit.

Q: Is the check result normal?
YES : Intermittent malfunction. (Refer to GROUP 00 – How to Cope with Intermittent Malfunction P.00-6).)
NO : Repair the wiring harness.

Step 5. Connector check: C-220 ETACS-ECU connector

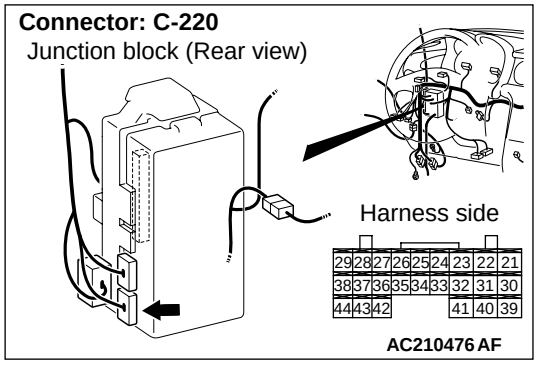

Q: Is the check result normal?
YES : Go to Step 6.
NO : Repair the defective connector.

Step 6. Check the wiring harness from E-18 door lock key cylinder switch (RH) connector terminal Nos. 1 and 3 to C-220 ETACS-ECU connector terminal Nos. 28 and 27.

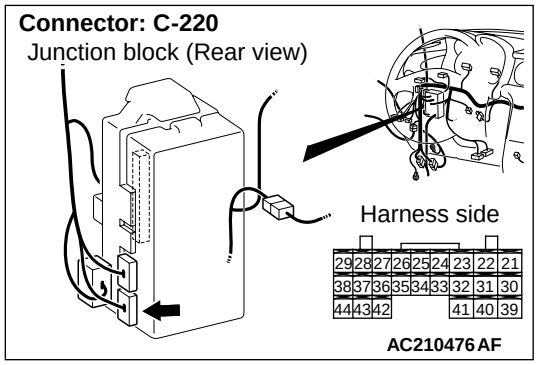

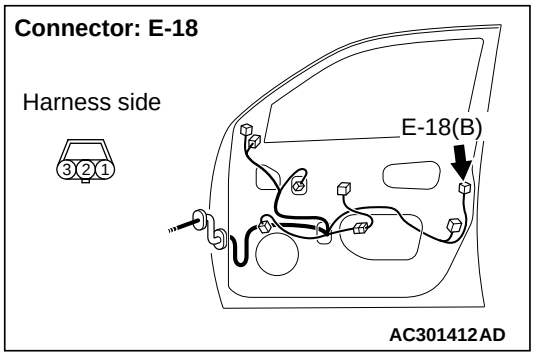

NOTE:

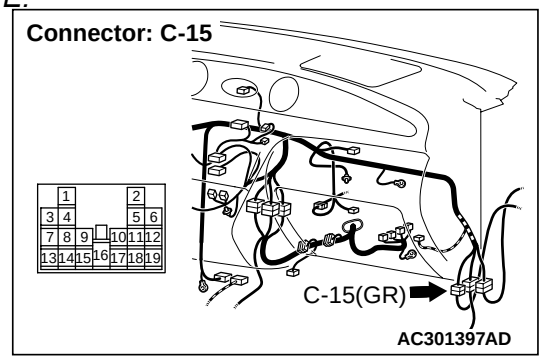

Prior to the wiring harness inspection, check intermediate connector C-15, and repair if necessary.

- Check the input line for open circuit.

Q: Is the check result normal?
YES : Go to Step 7.
NO : Repair the wiring harness.

Step 7. Retest the system.
Check that the passenger's door lock key cylinder switch signal is received normally.

Q: Is the check result normal?

YES : Intermittent malfunction. (Refer to GROUP 00 – How to Cope with Intermittent Malfunction P.00-6).)
NO : Replace the ETACS-ECU.

INSPECTION PROCEDURE N-18: The front passenger's door lock key cylinder switch signal is not detected. <R.H. drive vehicles>

⚠ CAUTION
Whenever the ECU is replaced, ensure that the input signal circuit is normal.

Door Lock Key Cylinder Switch Input Circuit <RHD>

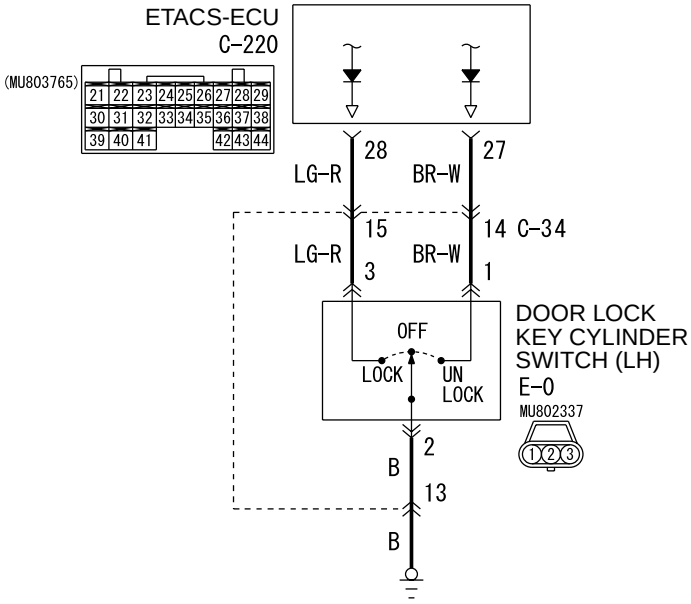

Wire colour code
B : Black LG : Light green G : Green L : Blue W : White Y : Yellow SB : Sky blue
BR : Brown O : Orange GR : Gray R : Red P : Pink V : Violet

W4Z54E44AA

COMMENTS ON TROUBLE SYMPTOM
Input signal from the front passenger's door lock key cylinder switch is used to operate the central door locking function. If the signal is abnormal, the central door locking function will not work normally.

POSSIBLE CAUSES
- Malfunction of the front passenger's door lock key cylinder switch
- Malfunction of the ETACS-ECU
- Damaged harness wires and connectors

DIAGNOSTIC PROCEDURE

Step 1. Connector check: E-04 door lock key cylinder switch (LH) connector

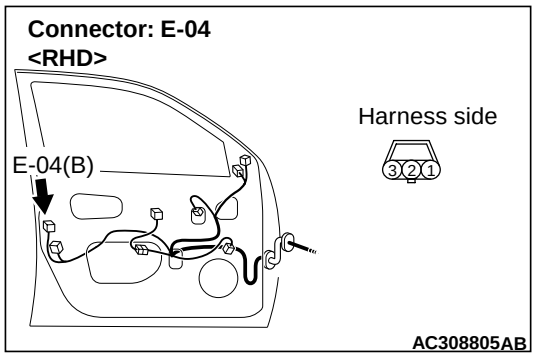

Q: Is the check result normal?
YES : Go to Step 2.
NO : Repair the defective connector.

Step 2. Check the door lock key cylinder switch (LH).

Refer to GROUP 42 – Door P.42-35.

Q: Is the check result normal?
YES : Go to Step 3.
NO : Replace the door lock key cylinder switch (LH).

Step 3. Measure the resistance at the E-04 door lock key cylinder switch (LH) connector.

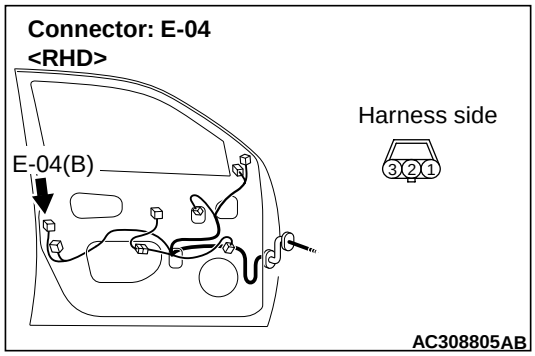

(1) Disconnect the connector, and measure at the wiring harness side.

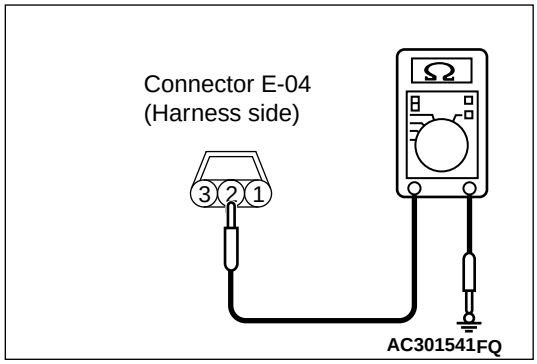

(2) Resistance between E-04 door lock key cylinder switch (LH) connector terminal No. 2 and body earth

OK: 2 Ω or less

Q: Is the check result normal?
YES : Go to Step 5.
NO : Go to Step 4.

Step 4. Check the wiring harness between E-04 door lock key cylinder switch (LH) connector terminal No. 2 and body earth.

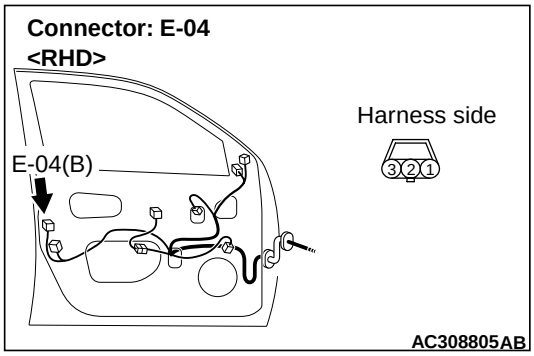

NOTE:

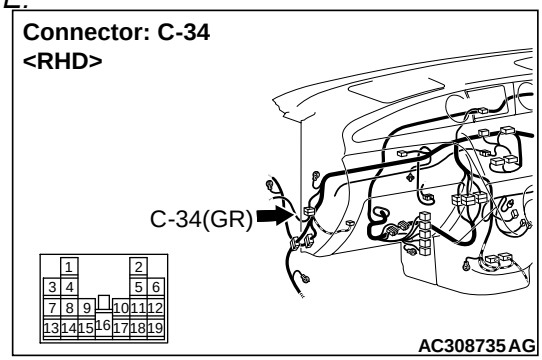

Prior to the wiring harness inspection, check intermediate connector C-34, and repair if necessary.

- Check the earth wires for open circuit.

Q: Is the check result normal?
YES : Intermittent malfunction. (Refer to GROUP 00 – How to Cope with Intermittent Malfunction P.00-6).)
NO : Repair the wiring harness.

Step 5. Connector check: C-220 ETACS-ECU connector

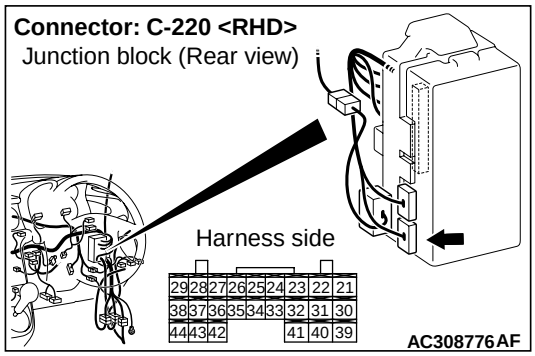

Q: Is the check result normal?
YES : Go to Step 6.
NO : Repair the defective connector.

Step 6. Check the wiring harness from E-04 door lock key cylinder switch (LH) connector terminal Nos. 1 and 3 to C-220 ETACS-ECU connector terminal Nos. 27 and 28.

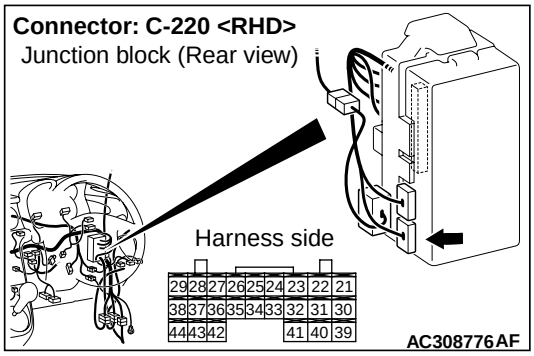

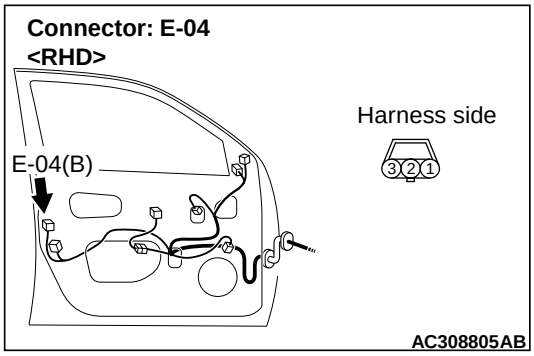

NOTE:

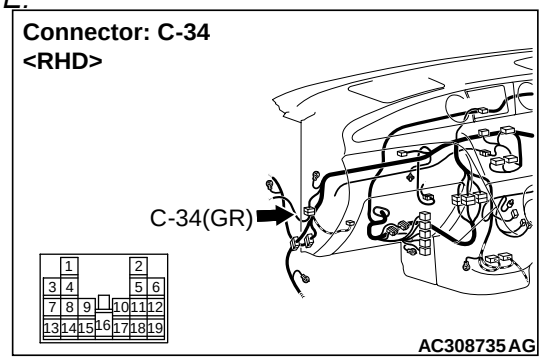

Prior to the wiring harness inspection, check intermediate connector C-34, and repair if necessary.

- Check the input line for open circuit.

Q: Is the check result normal?
YES : Go to Step 7.
NO : Repair the wiring harness.

Step 7. Retest the system.

Check that the passenger's door lock key cylinder switch signal is received normally.

Q: Is the check result normal?
YES : Intermittent malfunction. (Refer to GROUP 00 – How to Cope with Intermittent Malfunction P.00-6).)
NO : Replace the ETACS-ECU.

CHECK AT ECU TERMINAL

M1549001200759

ETACS-ECU

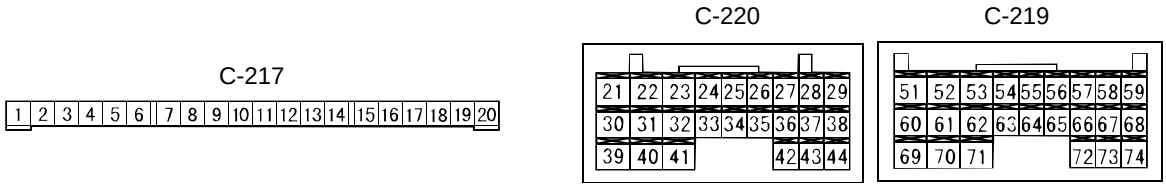

AC005554AH

NOTE: Terminal numbers 1 to 20 can not be measured as the ETACS-ECU is mounted on the junction block directly. The values are for reference only.

Terminal No.	Check item	Check condition	Normal condition
1	Output to the power window relay	When the power windows are operative	System voltage
2	Power supply to the central door locking system (battery positive voltage)	Always	System voltage
3	Earth (for ECU)	Always	0 V
4	Ignition switch (ACC)	Ignition switch: ACC	System voltage
5	Output to room lamp	When the room lamp is on	2 V or less
6	Power supply to interior lamp (battery positive voltage)	Always (when the interior lamp off function is off)	System voltage
7	Input from all the door switches	One of the door switches: ON (door open)	0 V
8	Power supply from ignition switch (IG1)	Ignition switch: ON	System voltage
9	Output to right turn-signal lamps	When right turn-signal lamps are on	System voltage
10	Input from driver's door switch	Driver's door switch: ON (door open)	0 V
11	Power supply to hazard warning lamp (battery positive voltage)	Always	System voltage
12	Output to central door locking (for locking the doors)	When the door lock actuators lock the doors	System voltage
13	Output to central door locking (for unlocking the doors other than the driver's door)	When the door lock actuators unlock the doors	System voltage
14	Output to left turn-signal lamps	When the left turn-signal lamps are on	System voltage
15	–	–	–
16	Output to rear wiper	When rear wiper is operating	System voltage
17	Input of rear wiper automatic stop signal	When rear wiper is operating	System voltage
18	Power supply from ignition switch (ACC)	Ignition switch: ACC	System voltage

Terminal No.	Check item	Check condition	Normal condition
19	–	–	–
20	Battery power supply (for ECU)	Always	System voltage
21	Input from rear fog lamp switch	Rear fog lamp switch: ON	0 V
22	Output to central door locking (for unlocking the driver's door)	When the door lock actuators unlock the doors	System voltage
23	Rear washer output	When rear washer is operating	System voltage
24 to 28	–	–	–
29	Input of collision signal	–	–
30	Input to key reminder switch	Key reminder switch: ON (ignition key removed)	0 V
31 to 34	–	–	–
35	Input to driver's door lock actuator (lock switch)	Driver's door lock: Locked	0 V
36	Input to driver's door lock actuator (unlock switch)	Driver's door lock: Unlocked	0 V
37, 38	–	–	–
39	Input to back-up lamp switch	Sift lever: R Ignition switch: ON	System voltage
	Input to inhibitor switch ("R" position)	Selector lever: R Ignition switch: ON	
40 to 44	–	–	–
51	Setting diagnosis code or sending input check signal	When diagnosis code is set (the MUT-II/III is connected or the diagnosis connector No.1 is earthed)	0 to 12 V (pulse signal)
		When input check signal is sent	0 V, 12 V (input signal is fluctuating)
52	–	–	–
53	Output to door-ajar indicator lamp	When door-ajar indicator lamp is on	0 V
54	Input from front fog lamp switch	Front fog lamp switch: ON	0 V
55	Input from hazard warning lamp switch	Hazard warning lamp switch: ON	0 V
56	Earth (for sensor)	Always	0 V
57, 58	–	–	–
59	SWS communication line	Always	0 to 12 V (pulse signal)
60 to 62	–	–	–
63	Input of vehicle speed signal	When the vehicle is being driven	0 to 12 V (pulse signal)
64, 65	–	–	–
66	Input from windshield intermittent wiper volume	Turn the ignition switch to the ACC position, and move the wiper volume from "Fast" to "Slow."	0 to 2.5 V
67	Input from diagnosis control	When MUT-II/III is connected	0 V

Terminal No.	Check item	Check condition	Normal condition
68	Input of SWS request signal	Always	0 to 12 V (pulse signal)
69	Output to ignition key cylinder illumination lamp	When ignition key cylinder illumination is on	2 V or less
70	–	–	–
71	Power supply to interior lamp	Always (when the interior lamp off function is off)	System voltage
72	–	–	–
73	Output to seat belt warning lamp	When seat belt warning lamp is on	0 V
74	Output to rear fog lamp	When rear fog lamp is on	System voltage

Column switch

C-310

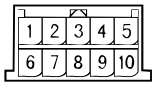

AC005555AF

Terminal No.	Check item	Check condition	Normal condition
1	System voltage	Always	System voltage
2	Input of SWS request signal	Always	0 to 12 V (pulse signal)
3	SWS communication line	Always	0 to 12 V (pulse signal)
4	Earth	Always	0 V
5	–	–	–
6	Output to windshield intermittent wiper volume	Ignition switch: ACC Move the wiper volume from "Fast" to "Slow."	0 to 2.5 V
7	–	–	–
8	Back-up output to windshield wiper switch	Windshield low-speed wiper switch or windshield high-speed wiper switch: ON	0 V
9	Power supply from ignition switch (IG1)	Ignition switch: ON	System voltage
10	Back-up output to headlamp switch	Headlamp switch: ON	0 V

Front-ECU

NOTE: Measurement is not possible as the front-ECU is mounted on the relay box directly. The values are for reference only.

Terminal No.	Check item	Check condition	Normal condition
1	Output to headlamp washer	When headlamp washer is operating	System voltage
2	–	–	–
3	Battery power supply (for headlamp washer)	Always	System voltage
4	Output to tail lamps	When the tail lamps are on	System voltage
5	Battery power supply (for ECU)	Always	System voltage
6	Output to low-beam headlamps	When low-beam headlamps are on	System voltage
7	Battery power supply (for tail lamps)	Always	System voltage
8, 9	Battery power supply (for headlamps)	Always	System voltage
10	Output to high-beam headlamps	When high-beam headlamps are on	System voltage
11	Output to front fog lamps	When front fog lamps are on	System voltage
21	Earth	Always	0 V
22	Power supply to the ignition switch (IG2)	Ignition switch: ON	System voltage
23	–	–	–
24	Output to windshield wiper (high speed operation)	When windshield wipers are operating at high speed	System voltage
25	Output to windshield wiper (low speed operation)	When windshield wipers are operating at low speed	System voltage
26	Back-up input from windshield wiper switch	Windshield low-speed wiper switch or windshield high-speed wiper switch: ON	0 V
27	Back-up input from headlamp switch	Headlamp switch: ON	0 V
28	Power supply from ignition switch (ACC)	Ignition switch: ACC	System voltage
29	Input of windshield wiper automatic stop signal	When windshield wipers are operating	System voltage
30	SWS communication line	Always	0 to 12 V (pulse signal)
31	Output to windshield washer	When windshield washer is operating	System voltage

Power window main switch

E-05

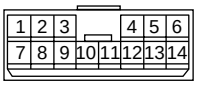

AC103264AH

Terminal No.	Check item	Check condition	Normal condition
1	Output to power window motor	–	–
2	Earth	Always	0 V
3	–	–	–
4	SWS communication line (to ETACS-ECU)	Always	0 to 12 V (pulse signal)
5	–	–	–
6	Power supply	Power window relay: ON	System voltage
7	Output to power window motor	–	–
8	Input from power window motor (pulse sensor earth)	–	0 V
9	Input from power window motor (pulse sensor signal)	When the power windows are operating	0 to 5 V (pulse signal)
10	Input from power window motor (pulse sensor signal)	When the power windows are operating	0 to 5 V (pulse signal)
11	SWS communication line (power window sub switch)	Power window relay: ON	0 to 12 V (pulse signal)
12	Input from power window motor (power supply to pulse sensor)	When the power windows are operating	5 V
13, 14	–	–	–

Power window sub switch

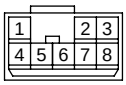

E-17 (front: RH), E-01 (rear: LH), E-21 (rear: RH) <LHD>
E-31 (front: LH), E-01 (rear: LH), E-21 (rear: RH) <RHD>

AC103265AH

Terminal No.	Check item	Check condition	Normal condition
1	Earth	Always	0 V
2	Input from power window motor	–	–
3	Input from power window motor	–	–
4	Power supply	Power window relay: ON	System voltage
5	Output to power window motor	–	–
6	SWS communication line	Power window relay: ON	0 to 12 V (pulse signal)
7	Output to power window motor	–	–
8	Input from power window motor	–	–

ON-VEHICLE SERVICE

ADJUSTMENT FUNCTION <Vehicles with keyless entry system>

M1549002500593

According to the adjustmentmode entry conditions of the input switch, the following functions can be adjusted. The data on adjustment will be memorized even if the battery is removed.

- Keyless entry system hazard answerback function
- Vehicle speed-dependent wiper function
- Headlamp automatic-shutdown function
- Dimmer interior lamp control
- Interior lamp automatic-shutdown function
- Initialization of all functions (Returns to initial settings)

1. Conditions for entering the adjustment mode
   i. Set each switch to the following state.
      - Hazard lamp switch: OFF
      - Diagnosis control: ON (Connect the MUT-II/III or earth No.1 pin of the 16-pin diagnosis connector.)
      - Key reminder switch: OFF (Insert the ignition key)
      - Ignition switch: "LOCK" (OFF) position
      - Driver's door switch: OFF (driver's door closed)
   ii. When the windshield washer switch is ON for more than ten seconds, the buzzer in the ETACS-ECU sounds for three seconds, and the adjustment mode will be set.
2. Conditions for exiting the adjustment mode
   - Diagnosis control: OFF (Disconnect the MUT-II/III or the earth of No.1 pin of the 16-pin diagnosis connector disconnected.)
   - Key reminder switch: ON (Remove the ignition key)
   - Ignition switch: Turning to any position other than "LOCK" (OFF) position
   - Driver's door switch: ON (driver's door opened)
   - When three minutes pass without configurations performed
   - When the other warning buzzer output is generated
3. Configurations of various functions

Function	Adjustment procedure
Keyless entry system hazard answerback function	When the lock button of the transmitter is pressed twice continuously within two seconds, the hazard answerback function during the lock state will be switched between available or unavailable. • Function available: Buzzer sounds once. (Initial state) • Function not available: Buzzer sounds twice. When the unlock button of the transmitter is pressed twice continuously within two seconds, the hazard answerback function during the unlock state will be switched between available or unavailable. • Function available: Buzzer sounds once. (Initial state) • Function not available: Buzzer sounds twice.
Vehicle speed-dependent wiper function	When the windshield wiper mist switch is turned ON for more than two seconds, the vehicle speed-dependent wiper function is switched between available or unavailable. • Function available: Buzzer sounds once. (Initial state) • Function not available: Buzzer sounds twice.
Headlamp automatic-shutdown function	When the passing switch is turned ON for more than two seconds with the head lamp switch ON and the turn signal lamp switch turned to RH, the headlamp automatic-shutdown function is switched between available or unavailable. • Function not available: Buzzer sounds twice. • Function available: (when the tail lamp illuminates with the ignition switch turned to the "LOCK" (OFF) position, it is not automatically turned off): Buzzer sounds three times. (Initial state)

Function	Adjustment procedure
Dimmer interior lamp control	When the turn signal lamp switch is set in the order of RH to LH to RH to LH within three seconds from the LH position, the delayed lamp-off time switches (Returns to a after e, and repeats from a in order.) a. 30 seconds: Buzzer sounds once. b. 10 seconds: Buzzer sounds twice. c. 0 seconds (No delay time): Buzzer sounds three times. d. 15 seconds: Buzzer sounds four times. (Initial state) e. 7.5 seconds: Buzzer sounds five times.
Interior lamp automatic-shutdown function	When the hazard lamp switch is turned ON for more than two seconds, the interior lamp automatic-shutdown function switches in the following order. (a and b switches alternately) a. Function available: Buzzer sounds once. (Initial state) b. Function not available: Buzzer sounds twice.
Initialization of all functions	When the windshield washer switch is ON for more than 20 seconds continuously, the buzzer sounds twice, and all functions will be initialized. (Settings are returned to their initial states.) The adjustment mode entry buzzer sounds after 10 seconds, however to initialize all functions, the ON state should be continued for 20 seconds. When the windshield washer switch is ON for more than 20 seconds continuously without the adjustment mode set, the adjustment mode will be set after 10 seconds without the initialization of all functions.